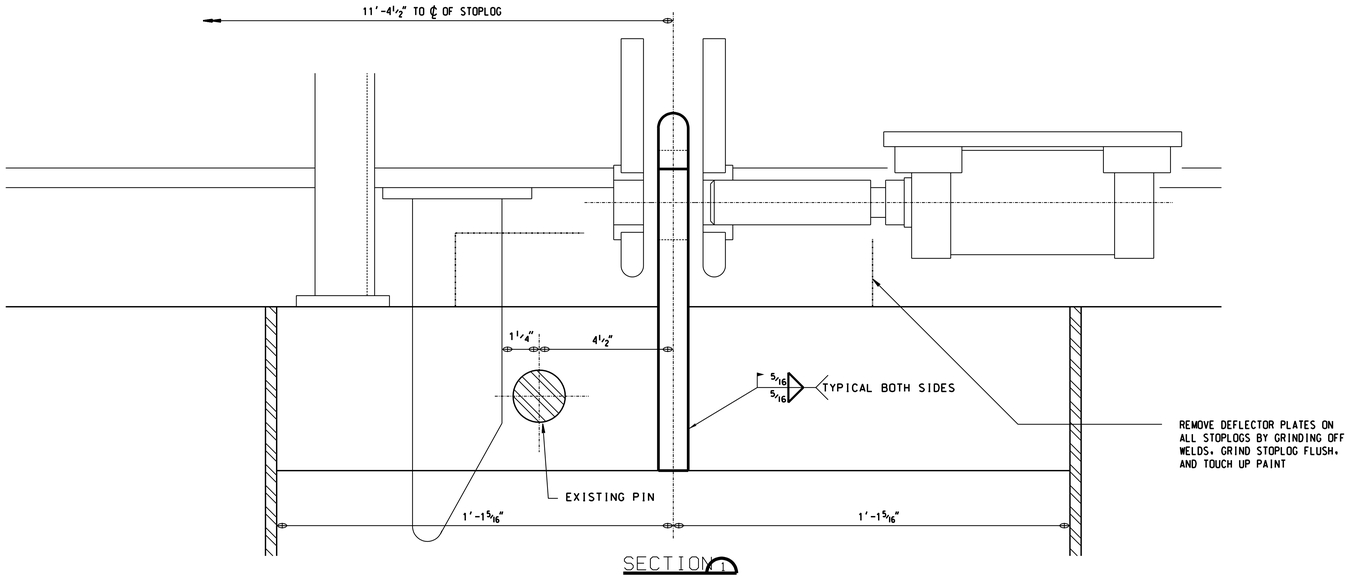

SECTION 1

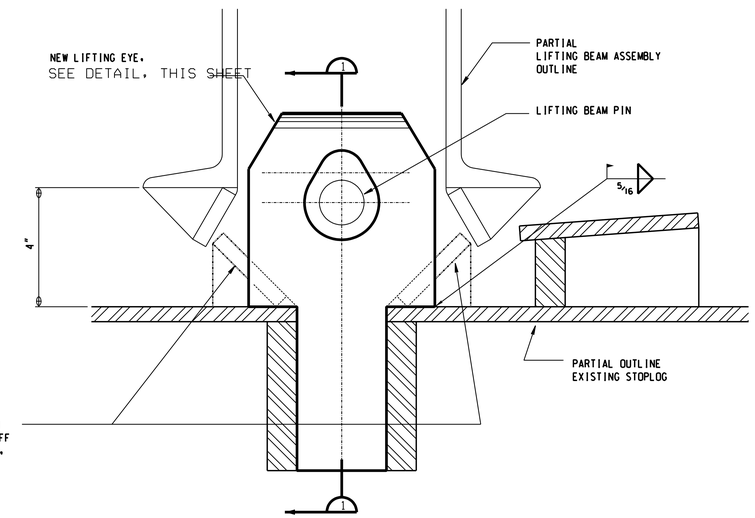

PARTIAL SECTION THRU STOPLOG AND LIFTING BEAM

MODIFICATIONS TO EXISTING STOPLOGS

8 STOPLOGS - 16 LIFT POINTS AS SHOWN

SCALE: 6 INCHES = 1 FOOT

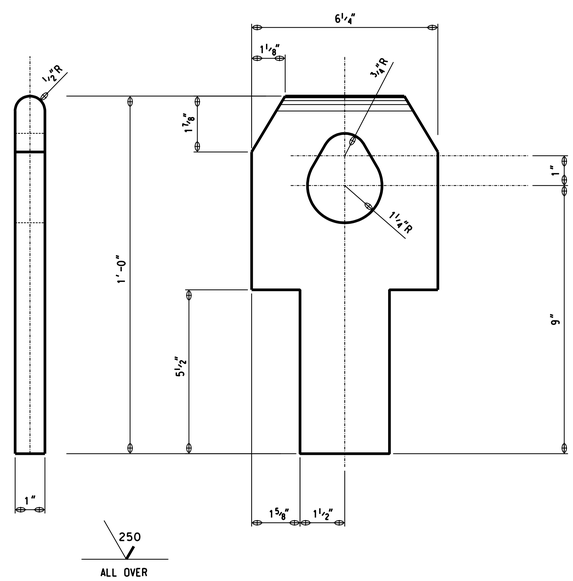

NEW LIFTING EYE

MAKE: 16
MATERIAL: A36 STRUCTURAL STEEL

SCALE: 6 INCHES = 1 FOOT

Symbol	Description	Date	Approved

Revisions

Prepared by: U.S. ARMY ENGINEER DISTRICT CORPS OF ENGINEERS OMAHA, NEBRASKA

U.S. ARMY ENGINEER DISTRICT CORPS OF ENGINEERS KANSAS CITY, MISSOURI

Designed by: T.L.H.

Drawn by: K.E.M.

Checked by: S.G.E.

Submitted by:

OSAGE RIVER
HARRY S. TRUMAN DAM AND RESERVOIR
POWERHOUSE
SPILLWAY STOPLOG LIFTING BEAM
MODIFICATIONS TO EXISTING STOPLOGS
PLANS, SECTIONS, AND DETAILS

Scale: AS SHOWN

Date: JULY 1994

Sheet number: M-5

Plot Scale Ratio: .1666 : 1

Computer File: HST12MB5.DGN

File No.