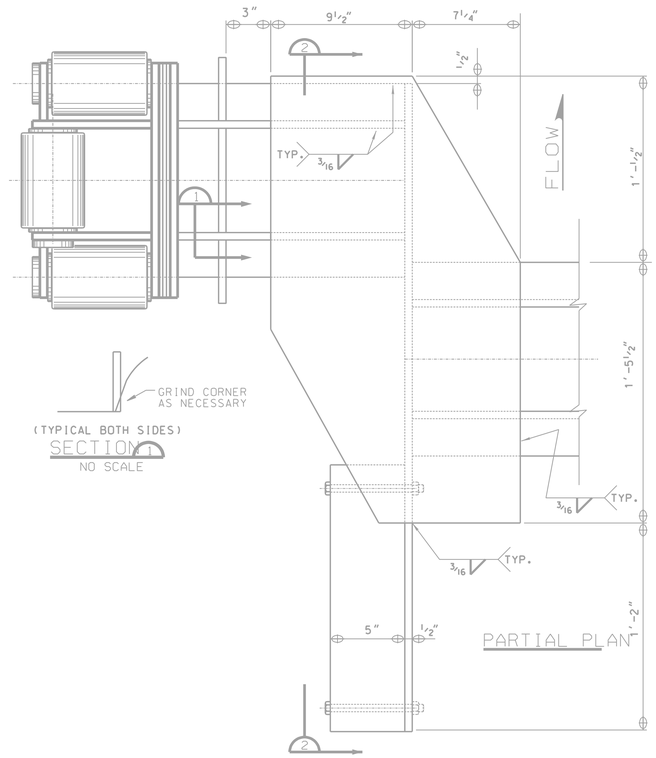

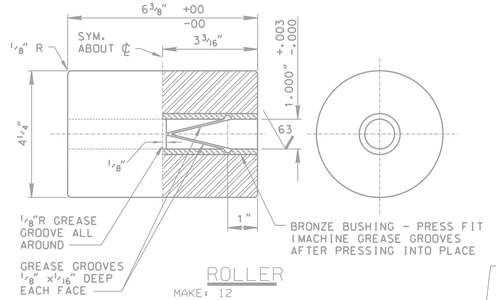

ROLLER

MAKE: 12
MATERIAL: STAINLESS STEEL
SCALE: 6 INCHES = 1 FOOT
0 1" 2" 3" 6"

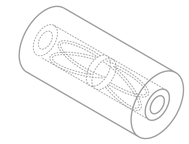

GREASE GROOVE ISOMETRIC

NO SCALE

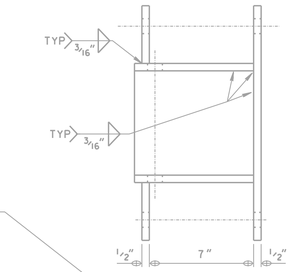

PLAN

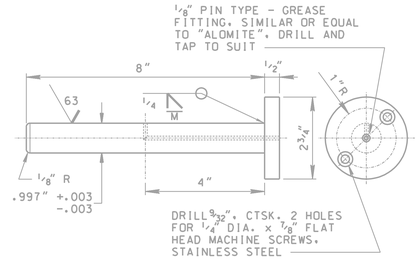

ROLLER PIN

MAKE: 12
MATERIAL: STAINLESS STEEL
SCALE: 6 INCHES = 1 FOOT

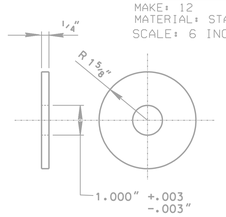

ROLLER WASHER

MAKE: 24
MATERIAL: BRONZE
SCALE: 6 INCHES = 1 FOOT

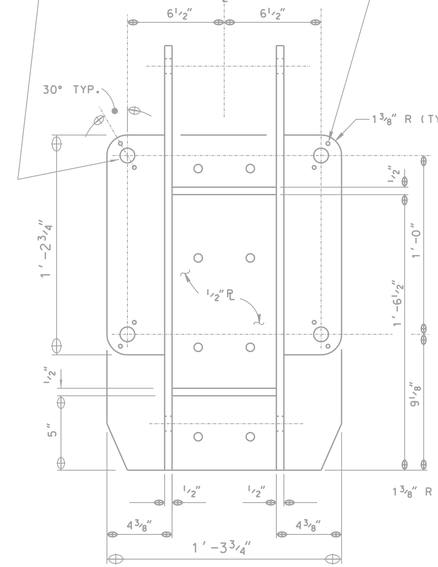

END VIEW

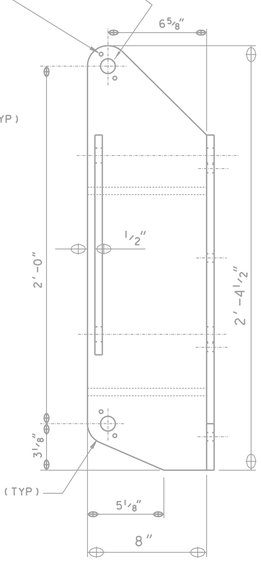

SIDE VIEW

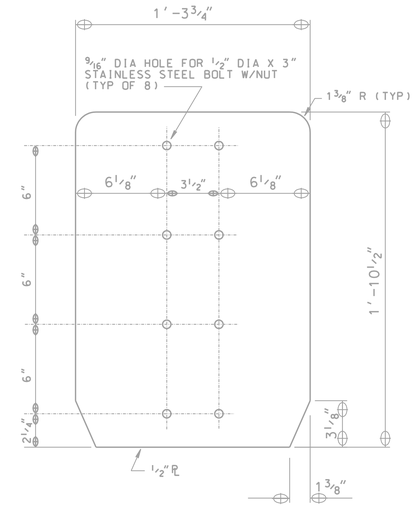

BACK VIEW

ALSO TEMPLATE FOR SHIMS AND END PLATE

END ROLLER ASSEMBLY

MAKE: 2
MATERIAL: A36 STRUCTURAL SEBL
SCALE: 3 INCHES = 1FOOT
0 3" 6" 12"

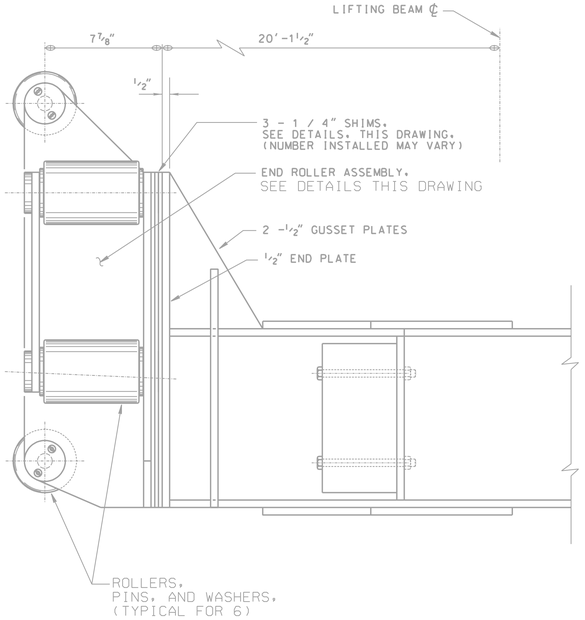

PARTIAL ELEVATION

LIFTING BEAM END ASSEMBLY

SCALE: 3 INCHES = 1FOOT
0 3" 6" 12"

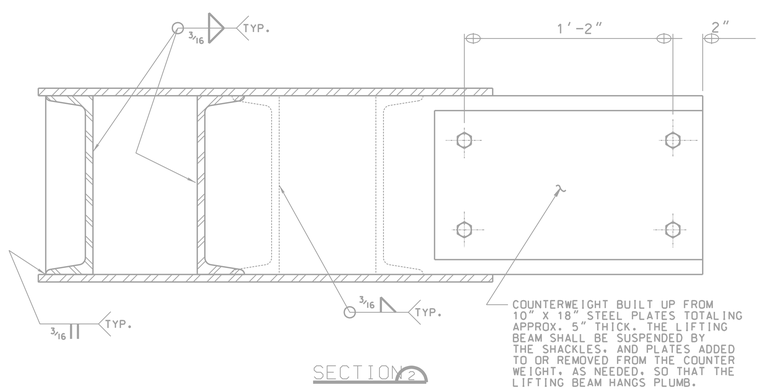

SECTION 2

COUNTERWEIGHT BUILT UP FROM 10" X 18" STEEL PLATES TOTALING APPROX. 5" THICK. THE LIFTING BEAM SHALL BE SUSPENDED BY THE SHACKLES, AND PLATES ADDED TO OR REMOVED FROM THE COUNTER WEIGHT, AS NEEDED, SO THAT THE LIFTING BEAM HANGS PLUMB.

Symbol	Description	Date	Approved
	Revisions		

Prepared by: U.S. ARMY ENGINEER DISTRICT CORPS OF ENGINEERS OMAHA, NEBRASKA	U.S. ARMY ENGINEER DISTRICT CORPS OF ENGINEERS KANSAS CITY, MISSOURI

Designed by: T.L.H.
Drawn by: K.E.M.
Checked by: K.E.M.
Submitted by:

OSAGE RIVER
HARRY S. TRUMAN DAM AND RESERVOIR
POWERHOUSE
SPILLWAY STOPLOG LIFTING BEAM
BEAM ENDS
PLANS, SECTIONS, AND DETAILS

Scale: AS SHOWN	Sheet number: M-2	Plot Scale Ratio: .333 : 1	
Date: JULY 1994		Computer File: HST12MB2.DGN	
		File No.	