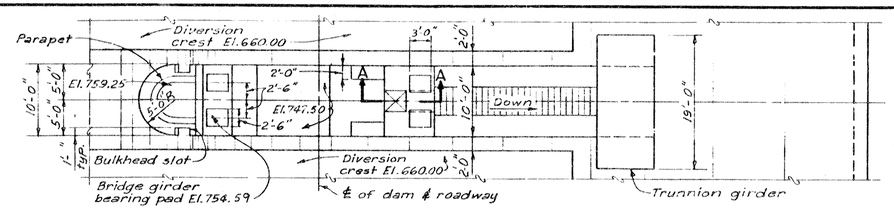

PLAN
Scale: 1/8" = 1'-0"

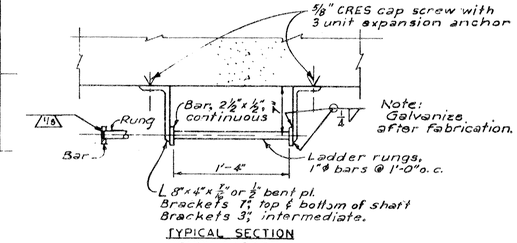

TYPICAL SECTION THRU LADDER
Scale: 1½"=1'-0"

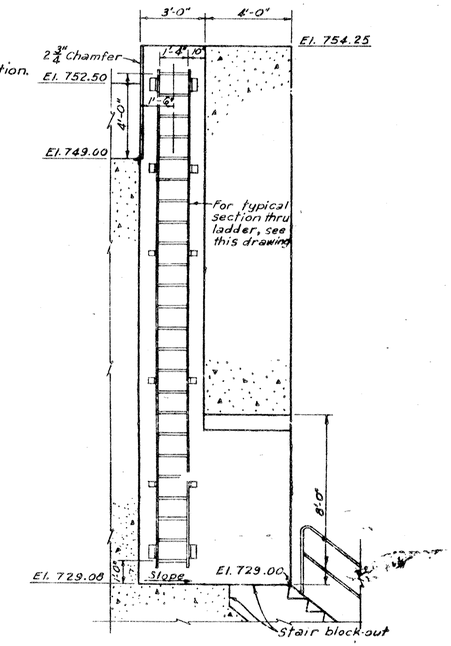

SECTION A
Scale: ⅛"=1'-0"

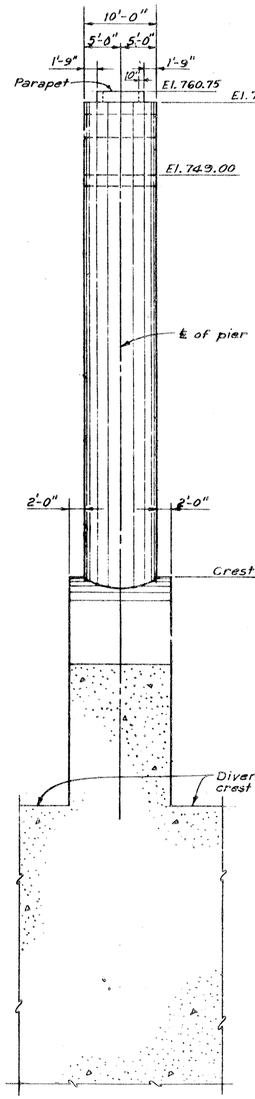

UPSTREAM ELEVATION
Scale: ⅛" = 1'-0"

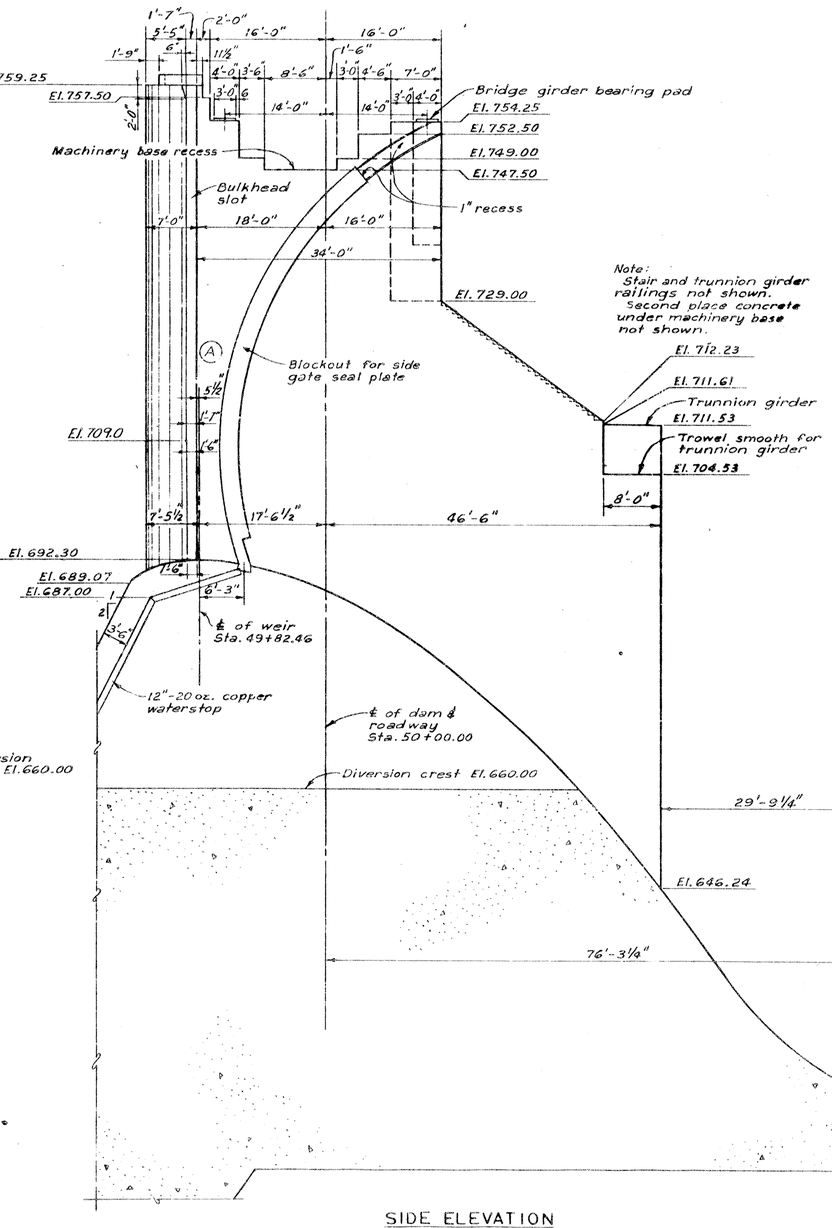

SIDE ELEVATION
Scale: ⅛" = 1'-0"

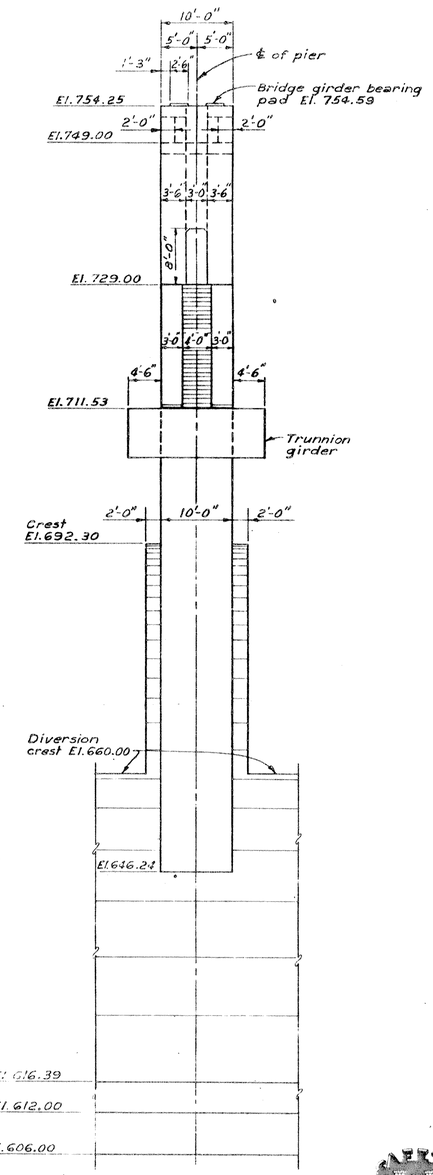

DOWNSTREAM ELEVATION
Scale: ⅛" = 1'-0"

REFERENCE DWGS.

General Notes – Spillway	G18
Stair & girder railings	G35
Bulkhead slot details	G34
Copper waterstop details	G38, G39, G40
Tainter gate seal Pl.	G86
Bridge bearing area	G118

RECORD DRAWING

JANUARY 1974

CONTRACT NO. DACW41-71-C-0043

SYM.	DESCRIPTION	DATE	APP'D.
	Revised for "As Built" conditions	4/22/74	
A	Revised bulkhead slot		

REVISIONS

OSAGE RIVER BASIN

KAYSINGER BLUFF RESERVOIR

STAGE III CONSTRUCTION

SPILLWAY–MONOLITH NOS. 10, 11 & 12
PIER LAYOUT

Dwg. No. G22
CORPS OF ENGINEERS
KANSAS CITY DISTRICT

Scale: as shown
U. S. ARMY
AUGUST 1970

Submitted: CHIEF, RESERVOIR STRUCTS. SECT.
Recommended: CHIEF, DESIGN BRANCH
Approved: CHIEF, ENGINEERING DIV.

DESIGNED BY: M.D.J. DRAWN BY: J.A.R. CHECKED BY: M.D.J.

C. & M. M. PLATE NO. 212