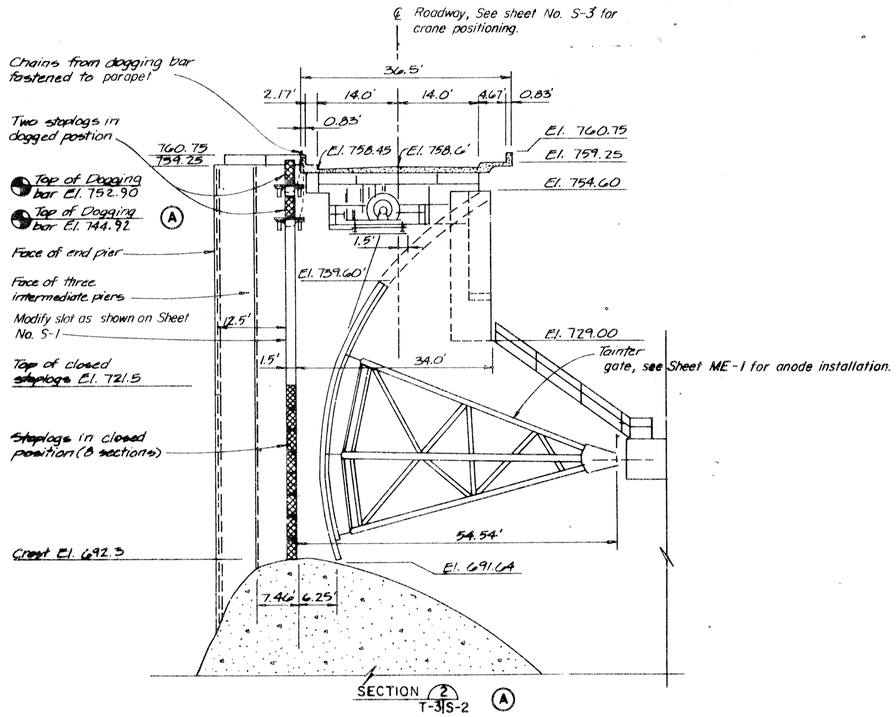

TYPICAL SECTION THRU SPILLWAY

SCALE: 1 INCH = 10 FEET

Government furnished 1/4" galvanized chain attached to dogging device with galvanized snap. Chain shall pass under stoplog, provide and install galvanized eyebolt to attach other end of chain to parapet at location indicated by Contracting Officer.

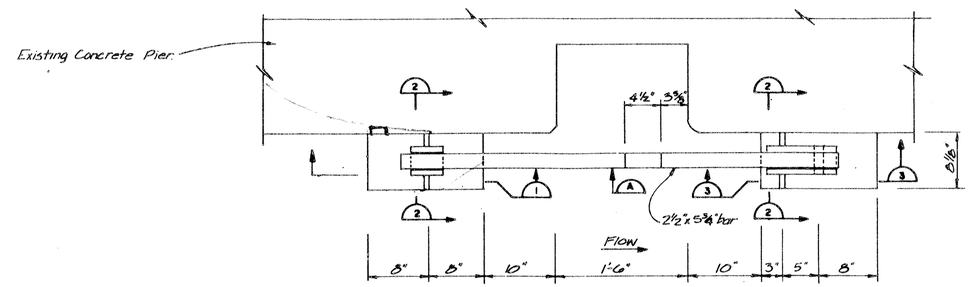

GOVERNMENT FURNISHED DOGGING DEVICE (PLAN)

Install 8 as show
8 opposite hand, at locations shown on SECTION 2 T-3 S-2 A

SCALE: 1 1/2 INCHES = 1 FOOT

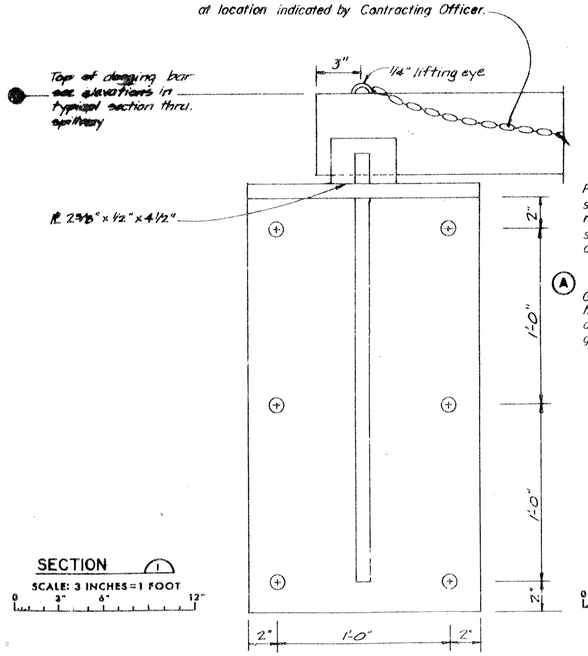

SECTION 1

SCALE: 3 INCHES = 1 FOOT

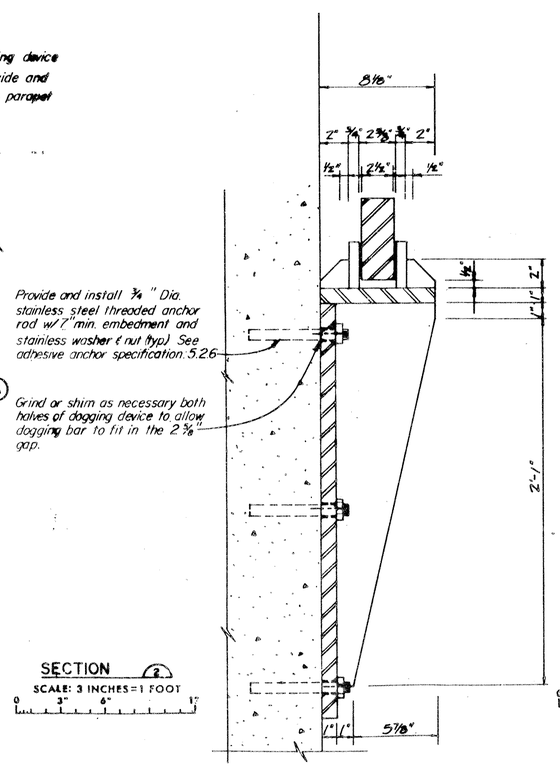

Provide and install 3/4" Dia. stainless steel threaded anchor rod w/ 7" min. embedment and stainless washer & nut (typ.) See adhesive anchor specification 5.26

Grind or shim as necessary both halves of dogging device to allow dogging bar to fit in the 2 3/8" gap.

SECTION 2

SCALE: 3 INCHES = 1 FOOT

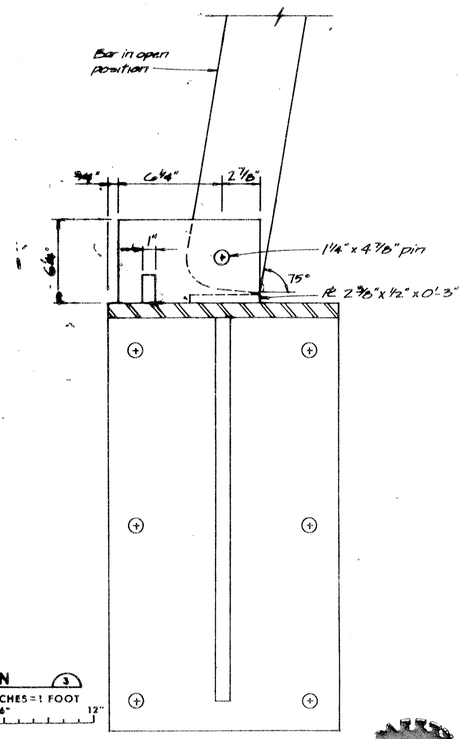

SECTION 3

SCALE: 3 INCHES = 1 FOOT

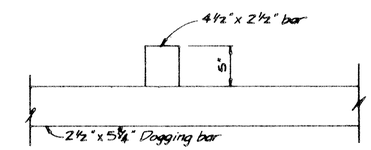

PEDESTAL DETAIL A

SCALE: 1 1/2 INCHES = 1 FOOT

Note: Dogging devices are Government furnished, but shall be installed by this contract.

DRAWINGS IN THIS FOLIO HAVE BEEN REDUCED TO ONE HALF THE ORIGINAL SCALE

Symbol	Description	Date	Approved
A	Added notes and cross references	3-28-91	JW

Revisions

Prepared by: U.S. ARMY ENGINEER DISTRICT, CORPS OF ENGINEERS, OMAHA, NEBRASKA

U.S. ARMY ENGINEER DISTRICT, CORPS OF ENGINEERS, KANSAS CITY, MISSOURI

Designed by: L. E. P.

Drawn by:

Checked by:

Submitted by:

OSAGE RIVER

HARRY S. TRUMAN DAM AND RESERVOIR

INSTALLATION OF SPILLWAY STOPLOGS

STOPLOG DOGGING DEVICES

Scale: AS SHOWN

Date: OCTOBER 1990

Sheet Number: S-1C

Print Scale Ratio

Design File

File No. 0-12-10975