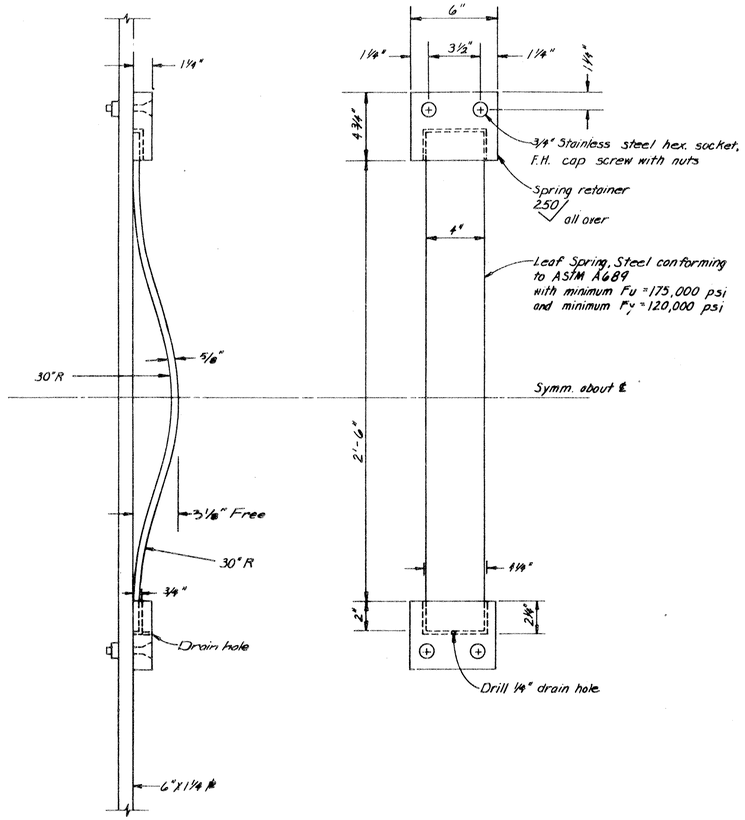

LEAF SPRING

SCALE: 3 INCHES = 1 FOOT

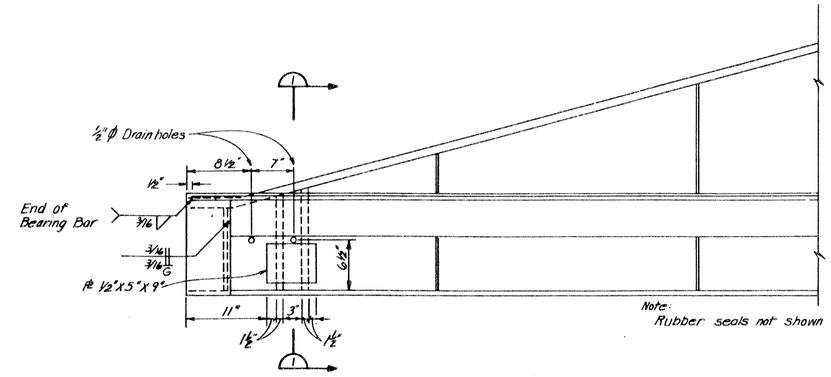

PARTIAL BOTTOM VIEW (6 / S-1 | S-3)

SCALE: 1½ INCHES = 1 FOOT

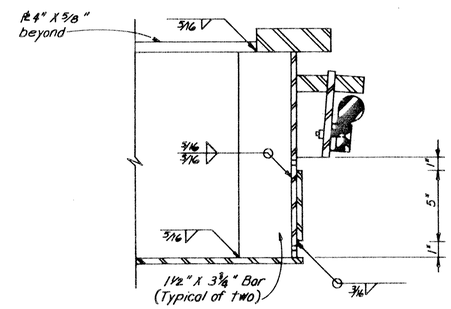

SECTION (1)

SCALE: 3 INCHES = 1 FOOT

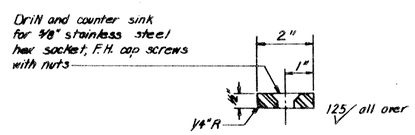

SEAL CLAMP

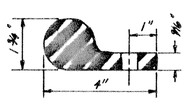

RUBBER SEAL TYPE "A"

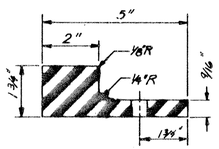

RUBBER SEAL TYPE "B"

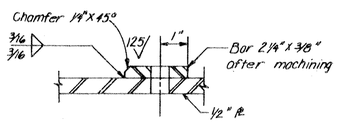

SEAL BACKING

SEAL DETAILS

SCALE: 6 INCHES = 1 FOOT

DRAWINGS IN THIS FOLIO HAVE BEEN REDUCED TO ONE HALF THE ORIGINAL SCALE

FOR INFORMATION ONLY

Symbol	Description	Date	Approved
	Revisions		

Prepared by: U.S. ARMY ENGINEER DISTRICT, CORPS OF ENGINEERS, OMAHA, NEBRASKA

U.S. ARMY ENGINEER DISTRICT, CORPS OF ENGINEERS, KANSAS CITY, MISSOURI

Designed by: L. E. P.

Drawn by:

Checked by:

Submitted by: Bruce M. Harris

OSAGE RIVER

HARRY S. TRUMAN DAM AND RESERVOIR

FABRICATION OF SPILLWAY STOPLOG

STOPLOG SECTIONS AND DETAILS

SHEET 2

Scale: AS SHOWN

Date: JUNE 1990

Sheet number: S-3

Prof. Scale Ratio

Design Files

File No. 0-12-10855