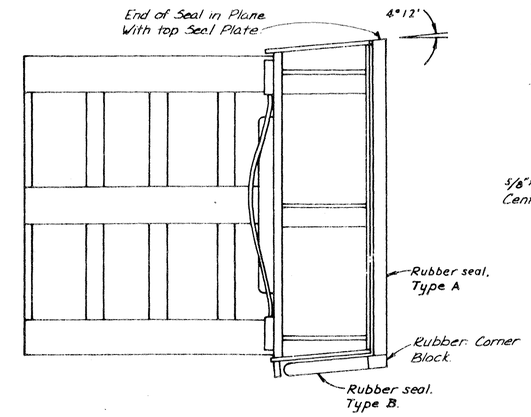

See also Isometric on this Sheet

SECTION 4 S-1|S-2

SCALE: 1½ INCHES = 1 FOOT

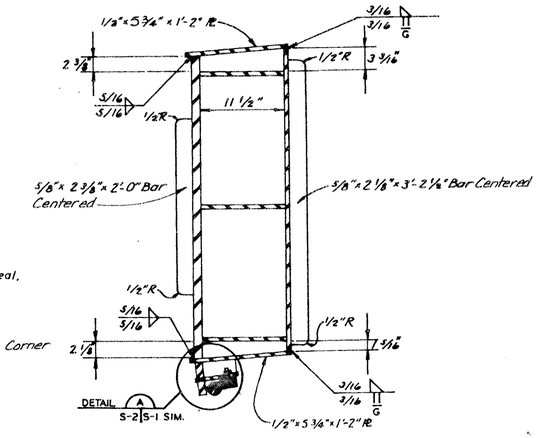

SECTION 3 S-1|S-2

SCALE: 1½ INCHES = 1 FOOT

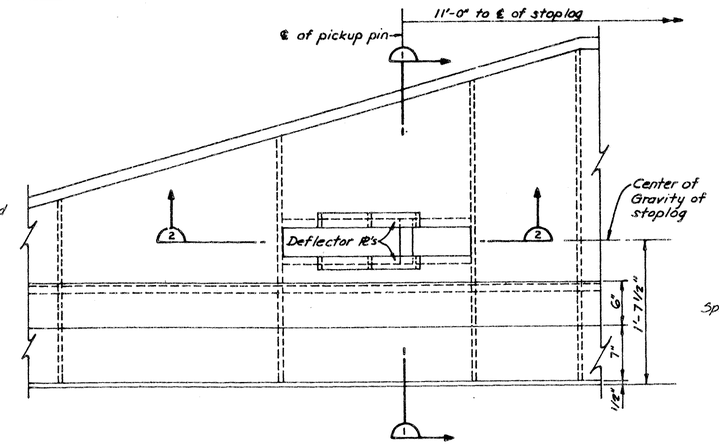

DETAIL C S-1|S-2

SCALE: 1½ INCHES = 1 FOOT

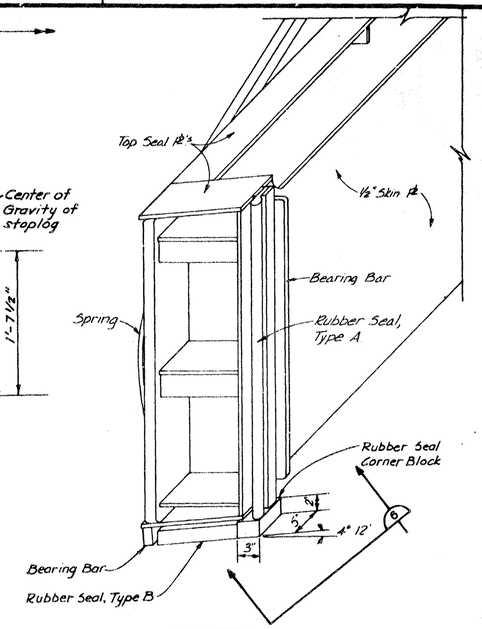

ISOMETRIC

SCALE: ¼ INCH = 1 FOOT

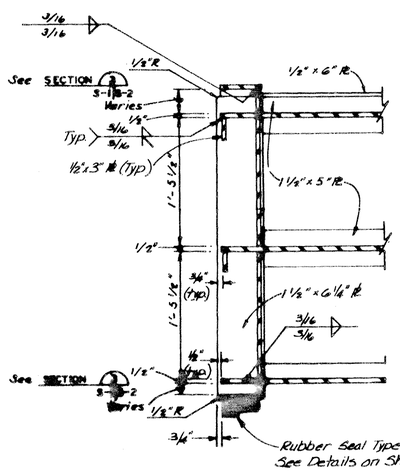

SECTION 5 S-1|S-2

SCALE: 1½ INCHES = 1 FOOT

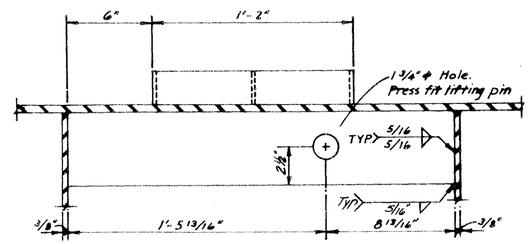

SECTION 2

SCALE: 3 INCHES = 1 FOOT

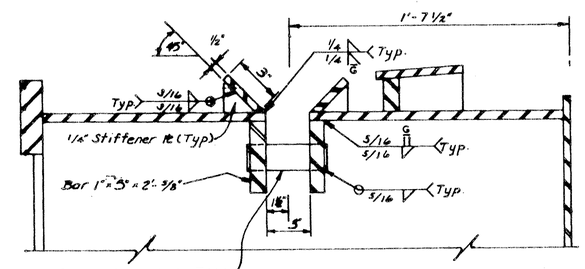

Lifting Pin 1 3/4"ϕ x 5 3/4"
Material: Stainless steel conforming to ASTM A276 Type 410 with minimum tensile strength = 100,000 psi and minimum yield point = 80,000 psi.

SECTION 1

SCALE: 3 INCHES = 1 FOOT

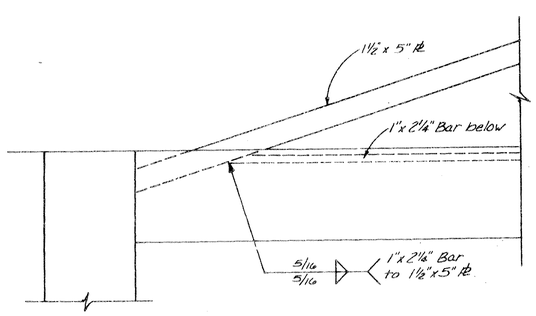

DETAIL D

NO SCALE S-1|S-3

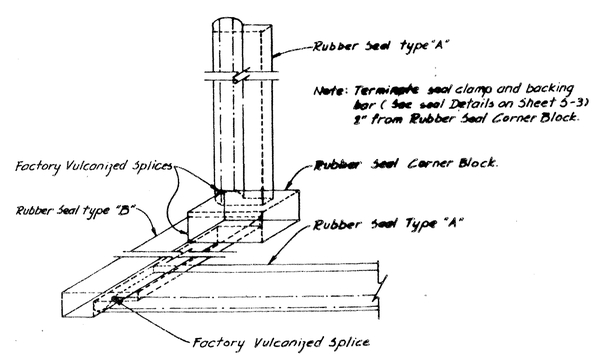

Note: Terminate seal clamp and backing bar (See seal Details on Sheet S-3) 2" from Rubber Seal Corner Block.

SECTION 6

SCALE: 3 INCHES = 1 FOOT

DRAWINGS IN THIS FOLIO HAVE BEEN REDUCED TO ONE HALF THE ORIGINAL SCALE

FOR INFORMATION ONLY

Symbol	Description	Date	Approved

Revisions

Prepared by: U.S. ARMY ENGINEER DISTRICT, CORPS OF ENGINEERS, OMAHA, NEBRASKA

U.S. ARMY ENGINEER DISTRICT, CORPS OF ENGINEERS, KANSAS CITY, MISSOURI

Designed by: L. E. P.

Drawn by:

Checked by:

Submitted by: Bruce N. Harris

OSAGE RIVER

HARRY S. TRUMAN DAM AND RESERVOIR

FABRICATION OF SPILLWAY STOPLOG

STOPLOG SECTIONS AND DETAILS

Scale: AS SHOWN

Date: JUNE 1990

Sheet number: S-2

Plot Scale Ratio

Design File:

File No. 0-12-10854