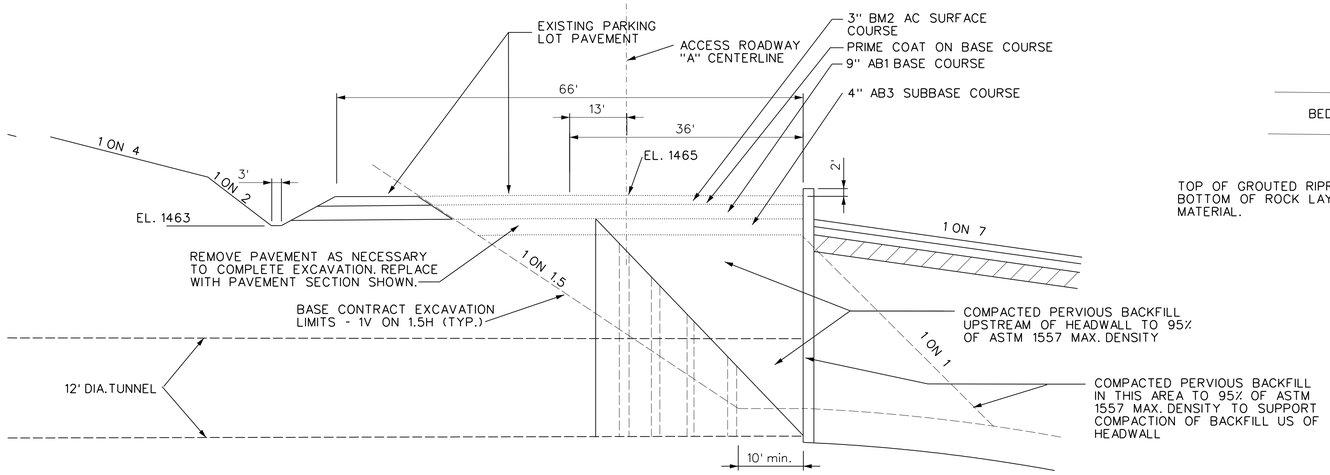

AA EXCAVATION & FIIL DETAIL @ HEADWALL

C-9 | C-17 NOT TO SCALE

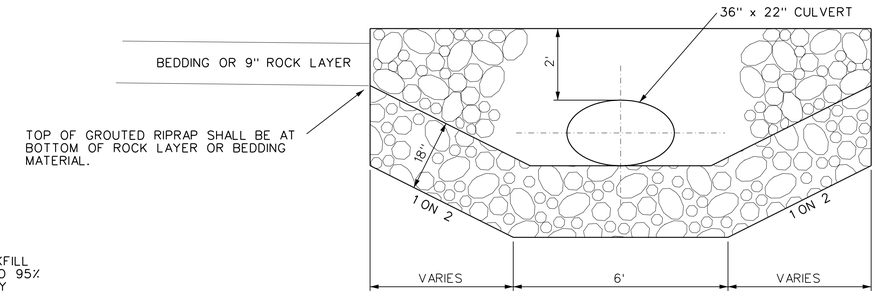

CC CULVERT OUTLET CROSS SECTION

C-17 | C-17 NOT TO SCALE

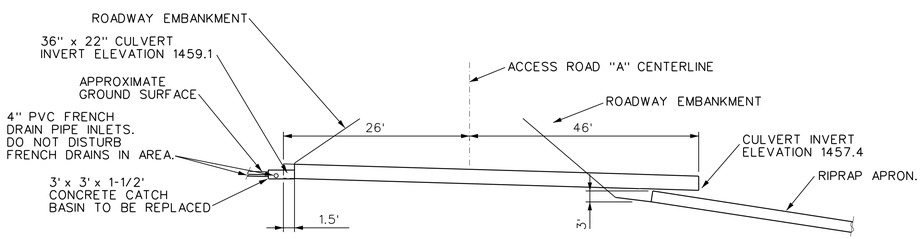

EXISTING CULVERT DETAIL

NOT TO SCALE

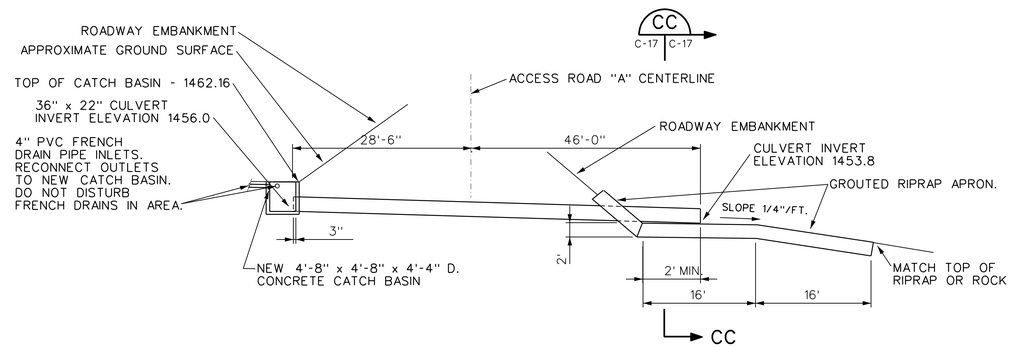

REPLACEMENT CULVERT DETAIL

NOT TO SCALE

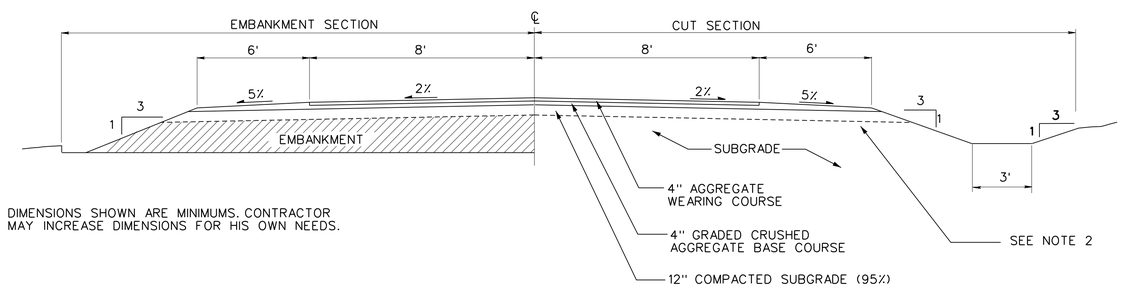

DIMENSIONS SHOWN ARE MINIMUMS. CONTRACTOR MAY INCREASE DIMENSIONS FOR HIS OWN NEEDS.

TYPICAL AGGREGATE SURFACED ROADWAY SECTION

NO SCALE

NOTE:

1. CONDITIONS MAY HAVE CHANGED SINCE ORIGINAL CONSTRUCTION FIELD VERIFY ELEVATIONS TO ENSURE PROPER DRAINAGE INTO CATCH BASIN AND ADEQUATE DISCHARGE ONTO THE GROUTED RIPRAP GUTTER.
2. THE CONTRACTOR SHALL PROVIDE A MINIMUM 30' OFFSET FROM CENTERLINE OF TEMPORARY ROADWAY TO OPEN EXCAVATION. PROVIDE JERSEY BARRIERS ALONG DOWNSTREAM EDGE OF TEMPORARY ROADWAY SHOULDER FOR A DISTANCE OF 125 FEET IN BOTH DIRECTIONS FROM STILLING BASIN CENTERLINE.

US Army Corps of Engineers
Kansas City District

Symbol	Description	Date	Appr.

Designed by: H.T.Y.
Dwn by: H.T.Y.
Ckd by: R.S.K.
Reviewed by:
Submitted by: D.L.M.
Date: APRIL 2004
Rev.
Design file no. E-1-1668
Drawing code:
File name: WIWC017.DGN
Plot date:
Plot scale: 20:1

U.S. ARMY ENGINEER DISTRICT
CORPS OF ENGINEERS
KANSAS CITY, MISSOURI

SALINE RIVER, KANSAS
WILSON LAKE
STILLING BASIN WALL REPAIR

MISCELLANEOUS DETAILS

Sheet reference number:
C-17