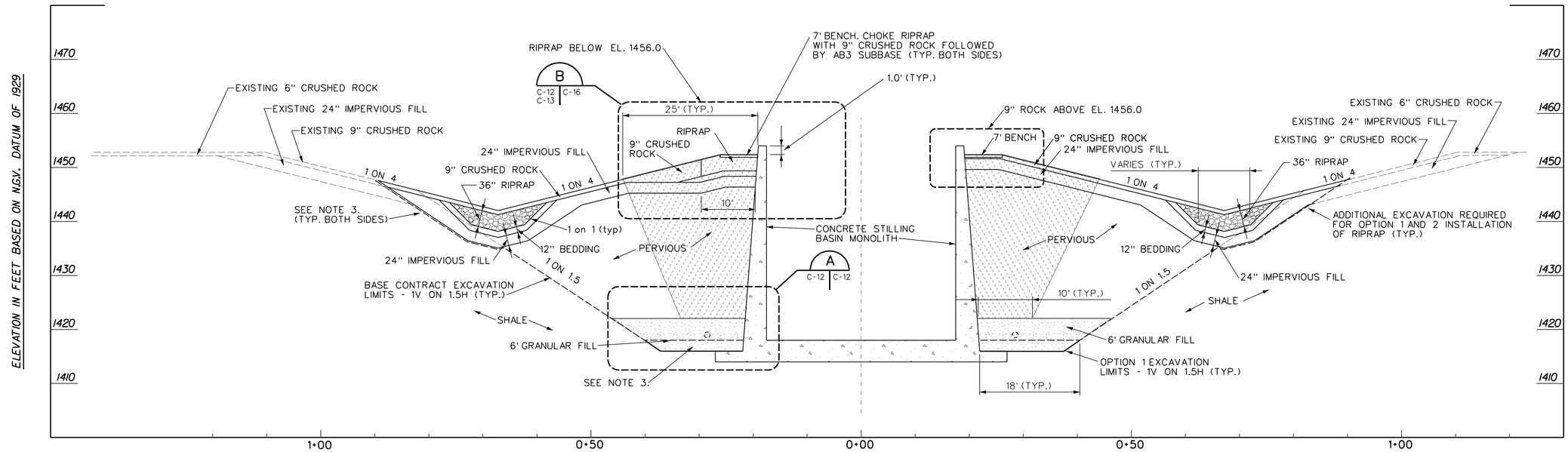

OPTION 1 - TYPICAL SECTION - BACKFILL DETAILS

10' 0 10' 20'
SCALE IN FEET
(VERTICAL AND HORIZONTAL)

LEGEND

AREA RESTRICTED. NO EXCAVATION OR HAUL EQUIPMENT TRAFFIC ALLOWED.

NOTES:

1. CROSS SECTION SHOWN LOOKING DOWNSTREAM.
2. 12" SLOTTED DRAIN PIPE. TYPICAL BOTH SIDES OF STILLING BASIN.
3. ADDITIONAL EXCAVATION REQUIRED UNDER OPTION 1.
4. EXCAVATION AND BACKFILL ON EACH SIDE OF THE STILLING BASIN SHALL BE CONDUCTED IN A BALANCED MANNER WITH RESPECT TO THE OPPOSITE SIDE OF THE STILLING BASIN. ELEVATIONS ON ONE SIDE SHALL BE MAINTAINED WITHIN 4' OF THE ELEVATION OF THE OPPOSITE SIDE OF THE STILLING BASIN.

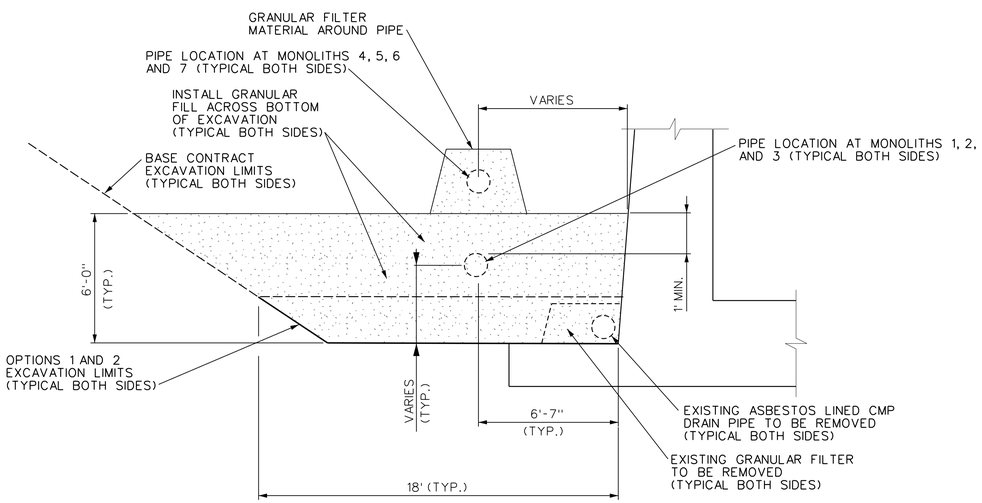

A
C-12 C-13 C-12
DETAIL
NOT TO SCALE

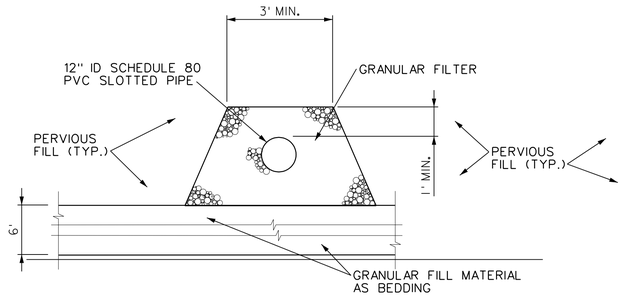

NEW WALL DRAIN DETAIL
NOT TO SCALE

US Army Corps of Engineers
Kansas City District

Symbol	Description	Date	Appr.

Designed by: H.T.Y.
Dwn by: H.T.Y.
Ckd by: R.S.K.
Reviewed by:
Submitted by: D.L.M.
Date: APRIL 2004
Design file no. E-1-1663
Drawing code:
File name: WWC012.DGN
Plot date:
Plot scale: 10:1
Rev.

U.S. ARMY ENGINEER DISTRICT
CORPS OF ENGINEERS
KANSAS CITY, MISSOURI

SALINE RIVER, KANSAS
WILSON LAKE
STILLING BASIN WALL REPAIR

OPTION 1 - TYPICAL CROSS SECTION

Sheet reference number:
C-12