DACW41-03-B-0003

US Army Corps of Engineers
Kansas City District
You Matter - We Care

Prospect Bridge Replacement And Brush Creek Channel Modification

Kansas City Missouri

Construction Solicitation And Specifications

February 2003

DEPARTMENT OF THE ARMY
Kansas City District, Corps of Engineers
757 Federal Building
Kansas City, Missouri 64106

SPECIFICATIONS FOR CONSTRUCTION OF
PROSPECT BRIDGE REPLACEMENT
AND BRUSH CREEK CHANNEL MODIFICATIONS
KANSAS CITY, MISSOURI

TABLE OF CONTENTS

COVER

BIDDING REQUIREMENTS, CONTRACT FORMS, AND CONDITIONS OF THE CONTRACT

Section	Title
00010	SF 1442 Solicitation, Offer, and Award Bidding Schedule
00100	Instructions, Conditions, and Notices to Bidders
00600	Representations and Certifications
00700	Contract Clauses
00800	Special Clauses
00810	Wage Rates

DIVISION 1 - GENERAL REQUIREMENTS

Section No.	Title
01090	Sources for Referenced Publications
01100	General
01270A	Measurement and Payment
01312	Resident Management System
01320A	Project Schedule
01330	Submittal Procedures
01354	Environmental protection For Civil Works
01356A	Storm Water Pollution Prevention Measures
01451	Contractor Quality Control
01500	Temporary Construction Facilities
01550	Hydrology
01780	Closeout Submittals

TABLE OF CONTENTS

(Continued)

DIVISIONS 2 THRU 16 - TECHNICAL REQUIREMENTS

Section No.	Title
	DIVISION 2 - SITE WORK
02001	Construction, General
02011	Site Investigation
02111	Clearing, Grubbing and Demolition
02200	Paving
KCMO2200	Supplement No. 1 to APWA 02200 - Paving
02201	Earthwork
02225	Channel Overlay Stone
02246	Geosynthetic Wall Reinforcement
02270	Erosion Control
02276	Modular Block Wall
02300	Seeding and Mulching
02440	Traffic Signs
02466A	Drilled Foundation Caissons (Piers)
02500	Sanitary Sewers
02518	Detectable Concrete Paver Blocks
02600	Storm Sewers
02610	Adjustment of Existing Manholes
02676	Water Main Relocations
02702	Sewer Pipe and Manhole Testing
02710	Rock Anchors
02715	Anchors and Drains
02720	Perforated Pipe
02820	Turf Reinforcement Mat
02923	Topsoil Material and Application
02924	Tree Preservation
02950	Trees, Shrubs, Ground Cover and Vines
	DIVISION 3 - CONCRETE
03101	Concrete Formwork
03150	Expansion Joints and Waterstops
03151	Temporary Works
03210	Reinforcement Steel
03311	Cast-In-Place Structural Concrete for Civil Works
03312	Masonry Seal Coating and Graffiti Control
03330	Aesthetic Treatment for Retaining Walls

TABLE OF CONTENTS

(Continued)

DIVISIONS 2 THRU 16 - TECHNICAL REQUIREMENTS

~~Section No.~~	~~Title~~
03362	Manhole Cementitious Liner
03370	Sewer Manhole Construction
03400	Paved Slope Protection

DIVISION 4 - MASONRY

(NOT USED)

DIVISION 5 – METALS

05018	Elastomeric Bearing Devices
05100	Steel Structures
05300	Intake Drainage System
05500	Miscellaneous Metals
05540	Steel H-Piles

DIVISION 6 - WOOD AND PLASTICS

(NOT USED)

DIVISION 7 - THERMAL & MOISTURE PROTECTION

07900	Joint Sealants

DIVISION 8 - DOORS & WINDOWS

(NOT USED)

DIVISION 9 - FINISHES

09901	Painting

DIVISION 10 - SPECIALTIES

(NOT USED)

TABLE OF CONTENTS

(Continued)

DIVISIONS 2 THRU 16 - TECHNICAL REQUIREMENTS

~~Section No.~~	~~Title~~
	DIVISION 11 - EQUIPMENT
11310	Re-circulation Pump
	DIVISION 12 - FURNISHINGS
	(NOT USED)
	DIVISION 13 - SPECIAL CONSTRUCTION
13110A	Cathodic Protection System (Sacrificial Anode)
	DIVISION 14 - CONVEYING SYSTEMS
	(NOT USED)
	DIVISION 15 - MECHANICAL
15600	Re-circulation System
	DIVISION 16 - ELECTRICAL
16000	Traffic Intersection Signal Work
16001	Traffic Signals
16070A	Seismic Protection for Electrical Equipment
16375	Electrical Distribution System, Underground

SOLICITATION, OFFER, AND AWARD *(Construction, Alteration, or Repair)*	1. SOLICITATION NO. DACW41-03-R-0063	2. TYPE OF SOLICITATION [ ] SEALED BID (IFB) [X] NEGOTIATED *(RFP)*	3. DATE ISSUED 01-Mar-2003	PAGE OF PAGES 1 OF 175

IMPORTANT - The "offer" section on the reverse must be fully completed by offeror.

4. CONTRACT NO.	5. REQUISITION/PURCHASE REQUEST NO. W58XUW-2347-3613	6. PROJECT NO.

7. ISSUED BY CODE W58XUW	8. ADDRESS OFFER TO *(If Other Than Item 7)* CODE
USAED, KANSAS CITY 760 FEDERAL BUILDING 601 E 12TH STREET KANSAS CITY MO 64106 TEL:(816) 983-3845 FAX: (816) 426-5169	**See Item 7** TEL: FAX:

9. FOR INFORMATION CALL:	A. NAME	B. TELEPHONE NO. *(Include area code)* *(NO COLLECT CALLS)*
	GREGORY C GULLEDGE	(816)983-3808

SOLICITATION

NOTE: In sealed bid solicitations "offer" and "offeror" mean "bid" and "bidder".

10. THE GOVERNMENT REQUIRES PERFORMANCE OF THE WORK DESCRIBED IN THESE DOCUMENTS *(Title, identifying no., date):*

Prospect Bridge and Brush Creek Re-Channelization
Kansas City, Missouri

The work to be performed consists of the demolition and replacement of the Prospect Avenue Bridge, including traffic signing, and approximately 2500 feet of re-channelization of Brush Creek. The work also includes the construction of dams, walkways and landscaping. Permanent pools of water will have provisions for recirculation and drainage for maintenance at the dams. Walkways will be lighted and incorporate landscaping and landings around the dams and on pedestrian ramps leading from Prospect to the channel, which will be compliant with the American Disabilities Act (ADA).

THIS IS AN UNRESTRICTED PROCUREMENT. NAICS CODE 234120

11. The Contractor shall begin performance within 10 calendar days and complete it within 570 calendar days after receiving [ ] award, [X] notice to proceed. This performance period is [X] mandatory, [ ] negotiable. *(See _____ .)*

12 A. THE CONTRACTOR MUST FURNISH ANY REQUIRED PERFORMANCE AND PAYMENT BONDS? *(If "YES," indicate within how many calendar days after award in Item 12B.)* [X] YES [ ] NO	12B. CALENDAR DAYS 10

13. ADDITIONAL SOLICITATION REQUIREMENTS:

A. Sealed offers in original and 5 copies to perform the work required are due at the place specified in Item 8 by 02:00 PM *(hour)* local time 27 Mar 2003 *(date).* If this is a sealed bid solicitation, offers must be publicly opened at that time. Sealed envelopes containing offers shall be marked to show the offeror's name and address, the solicitation number, and the date and time offers are due.

B. An offer guarantee [X] is, [ ] is not required.

C. All offers are subject to the (1) work requirements, and (2) other provisions and clauses incorporated in the solicitation in full text or by reference.

D. Offers providing less than 120 calendar days for Government acceptance after the date offers are due will not be considered and will be rejected.

SOLICITATION, OFFER, AND AWARD (Continued)

(Construction, Alteration, or Repair)

OFFER ***(Must be fully completed by offeror)***

14. NAME AND ADDRESS OF OFFEROR *(Include ZIP Code)*		15. TELEPHONE NO. *(Include area code)*
		16. REMITTANCE ADDRESS *(Include only if different than Item 14)* **See Item 14**
CODE	FACILITY CODE	

17. The offeror agrees to perform the work required at the prices specified below in strict accordance with the terms of this solicitation, if this offer is accepted by the Government in writing within _____ calendar days after the date offers are due. *(Insert any number equal to or greater than the minimum requirements stated in Item 13D. Failure to insert any number means the offeror accepts the minimum in Item 13D.)*

AMOUNTS	SEE SCHEDULE OF PRICES

18. The offeror agrees to furnish any required performance and payment bonds.

19. ACKNOWLEDGMENT OF AMENDMENTS

(The offeror acknowledges receipt of amendments to the solicitation -- give number and date of each)

AMENDMENT NO.										
DATE										

20A. NAME AND TITLE OF PERSON AUTHORIZED TO SIGN OFFER *(Type or print)*	20B. SIGNATURE	20C. OFFER DATE

AWARD ***(To be completed by Government)***

21. ITEMS ACCEPTED:

22. AMOUNT	23. ACCOUNTING AND APPROPRIATION DATA

24. SUBMIT INVOICES TO ADDRESS SHOWN IN *(4 copies unless otherwise specified)*	**ITEM**	25. OTHER THAN FULL AND OPEN COMPETITION PURSUANT TO ☐ 10 U.S.C. 2304(c) ☐ 41 U.S.C. 253(c)
26. ADMINISTERED BY CODE		27. PAYMENT WILL BE MADE BY: CODE

CONTRACTING OFFICER WILL COMPLETE ITEM 28 OR 29 AS APPLICABLE

☐ 28. NEGOTIATED AGREEMENT *(Contractor is required to sign this document and return _ copies to issuing office.)* Contractor agrees to furnish and deliver all items or perform all work, requisitions identified on this form and any continuation sheets for the consideration stated in this contract. The rights and obligations of the parties to this contract shall be governed by (a) this contract award, (b) the solicitation, and (c) the clauses, representations, certifications, and specifications or incorporated by reference in or attached to this contract.

☐ 29. AWARD *(Contractor is not required to sign this document.)* Your offer on this solicitation, is hereby accepted as to the items listed. This award consummates the contract, which consists of (a) the Government solicitation and your offer, and (b) this contract award. No further contractual document is necessary.

30A. NAME AND TITLE OF CONTRACTOR OR PERSON AUTHORIZED TO SIGN *(Type or print)*		31A. NAME OF CONTRACTING OFFICER *(Type or print)* TEL: EMAIL:
30B. SIGNATURE	30C. DATE	31B. UNITED STATES OF AMERICA BY	31C. AWARD DATE

ITEM NO	SUPPLIES/SERVICES	QUANTITY	UNIT	UNIT PRICE	AMOUNT
0001		1	Lump Sum		
	Demolition, General FFP "Demolition General", includes 22,250 square yards of channel paving to be broken, removed and placed in areas noted on the drawings or in the specifications; 8,100 square yards of channel paving to be broken and remain in place; 6,100 square feet of 12-inch thick asphalt pavement; all pipe to be grouted full in place, and PURCHASE REQUEST NUMBER: W58XUW-2347-3613				
				NET AMT	

FOB: Destination

ITEM NO	SUPPLIES/SERVICES	QUANTITY	UNIT	UNIT PRICE	AMOUNT
0002		1	Lump Sum		
	KCPL FFP KCPL", Reimbursement of work done by KCPL. Adjustment will be made to the contract to match the amount billed by KCPL.				
				NET AMT	

FOB: Destination

ITEM NO	SUPPLIES/SERVICES	QUANTITY	UNIT	UNIT PRICE	AMOUNT
0003		1	Lump Sum		
	Sanitary Sewer FFP Sanitary Sewers" and 0004, "Storm Sewers" includes all earthwork, trenching, pipe, Manholes (includes the construction of manholes, including modifications to existing manholes, excavations, bracing of excavations, materials used for manhole construction, backfilling and manhole lids), Drop Inlets (includes construction of drop inlets, including modifications to existing drop inlets, excavations, bracing of excavations, materials used for drop inlet construction and backfilling), Curb Inlets (includes construction of curb inlets, including modifications to existing curb inlets, excavations, bracing of excavations, materials used for curb inlet construction and backfilling), Field Inlets (includes construction of field inlets, including modifications to existing field inlets, excavations, bracing of excavations, materials used for field inlet construction and backfilling), manhole lining, connections, temporary service and any other incidental work.				
				NET AMT	

FOB: Destination

ITEM NO	SUPPLIES/SERVICES	QUANTITY	UNIT	UNIT PRICE	AMOUNT
0004		1	Lump Sum		
	Storm Sewer FFP				
				NET AMT	

FOB: Destination

ITEM NO	SUPPLIES/SERVICES	QUANTITY	UNIT	UNIT PRICE	AMOUNT
0005		1	Lump Sum		
	Clearing and Grubbing FFP Clearing and Grubbing" is for the clearing and grubbing work required and defined in SECTION: CLEARING, GRUBBING AND DEMOLITION.				
				NET AMT	

FOB: Destination

ITEM NO	SUPPLIES/SERVICES	QUANTITY	UNIT	UNIT PRICE	AMOUNT
0006		28,560	Cubic Yard		
	Rock Excavation FFP " Rock Excavation", includes all work required to excavate all rock units below the top of hard rock. Hard rock is defined as limestone.				
				NET AMT	

FOB: Destination

ITEM NO	SUPPLIES/SERVICES	QUANTITY	UNIT	UNIT PRICE	AMOUNT
0007			Lump Sum		
	Common Excavation FFP " Common Excavation", includes excavation of all clay, silts, sand, gravel, pebbles, cobbles, boulders and shale.				
				NET AMT	

FOB: Destination

ITEM NO	SUPPLIES/SERVICES	QUANTITY	UNIT	UNIT PRICE	AMOUNT
0008		58,700	Cubic Yard		
	Random Fill FFP " Random Fill", includes all placement of clay, silts, sands, gravel, pebbles, cobbles and top soil.				
				NET AMT	

FOB: Destination

ITEM NO	SUPPLIES/SERVICES	QUANTITY	UNIT	UNIT PRICE	AMOUNT
0009		2,690	Cubic Yard		
	Impervious Fill FFP " Impervious Fill", includes all placement of clays (CH and CL).				
				NET AMT	

FOB: Destination

ITEM NO	SUPPLIES/SERVICES	QUANTITY	UNIT	UNIT PRICE	AMOUNT
0010		12,000	Cubic Yard		
	Pervious Fill FFP " Pervious Fill", includes all delivery and placement of siliceous and natural sand to be used as backfill for channel walls.				
				NET AMT	

FOB: Destination

ITEM NO	SUPPLIES/SERVICES	QUANTITY	UNIT	UNIT PRICE	AMOUNT
0011		815	Cubic Yard		
	Coarse Filter FFP "Coarse Filter", includes all delivery and placement of crushed limestone (ASTM C-33, size 7) to be used as backfill for channel walls.				
				NET AMT	

FOB: Destination

ITEM NO	SUPPLIES/SERVICES	QUANTITY	UNIT	UNIT PRICE	AMOUNT
0012		14,000	Ton Miles		
	Quarry-Run Rock FFP " Quarry-Run Rock", includes all delivery and placement of tough, durable particles well graded between the maximum and minimum sizes. The upper limit of size for this material shall not exceed the layer thickness required. Not more than 15 percent shall pass the 2-inch sieve.				
				NET AMT	

FOB: Destination

ITEM NO	SUPPLIES/SERVICES	QUANTITY	UNIT	UNIT PRICE	AMOUNT
0013		10,200	Square Yard		
	Paved Slope Protection FFP "Paved Slope Protection", includes concrete and rock slope protection, placed into the concrete matrix, at the spacing indicated on the drawings.				
				NET AMT	

FOB: Destination

ITEM NO	SUPPLIES/SERVICES	QUANTITY	UNIT	UNIT PRICE	AMOUNT
0014		10,980	Square Foot		
	Modular Block Walls FFP " Modular Block Walls", includes un-reinforced concrete footings, geogrid strips, granular backfill, and related excavation.				
				NET AMT	

FOB: Destination

ITEM NO	SUPPLIES/SERVICES	QUANTITY	UNIT	UNIT PRICE	AMOUNT
0015		4,500	Square Yard		
	6-inch Concrete Sidewalk FFP " 6-Inch Concrete Sidewalk", includes concrete with wire mesh, surface subgrade preparation, crushed rock, concrete curb and detectable paver blocks where required.				
				NET AMT	

FOB: Destination

ITEM NO	SUPPLIES/SERVICES	QUANTITY	UNIT	UNIT PRICE	AMOUNT
0016		1,200	Square Yard		
	8-inch Concrete Ramp Accessway FFP "8-inch Concrete Ramp Accessway", includes concrete with wire mesh, surface subgrade preparation and crushed rock.				
				NET AMT	

FOB: Destination

ITEM NO	SUPPLIES/SERVICES	QUANTITY	UNIT	UNIT PRICE	AMOUNT
0017		800	Square Yard		
	18-inch Concrete Channel Pavement FFP "18-inch Concrete Channel Pavement", includes anchors, reinforcing steel, and drains as shown on the drawings.				
				NET AMT	

FOB: Destination

ITEM NO	SUPPLIES/SERVICES	QUANTITY	UNIT	UNIT PRICE	AMOUNT
0018		1,330	Square Yard		
	12-inch Concrete Channel Pavement FFP " Concrete Channel Pavement", concrete with reinforcing steel.				
				NET AMT	

FOB: Destination

ITEM NO	SUPPLIES/SERVICES	QUANTITY	UNIT	UNIT PRICE	AMOUNT
0019		3,200	Square Yard		
	6-inch Concrete Channel Pavement FFP "6-inch Concrete Channel Pavement", includes reinforced concrete and anchors				
				NET AMT	

FOB: Destination

ITEM NO	SUPPLIES/SERVICES	QUANTITY	UNIT	UNIT PRICE	AMOUNT
0020			Lump Sum		
	Seeding and Mulching FFP Seeding and Mulching", includes seed and mulch				
				NET AMT	

FOB: Destination

ITEM NO	SUPPLIES/SERVICES	QUANTITY	UNIT	UNIT PRICE	AMOUNT
0021			Lump Sum		
	Swope Parkway Trail FFP "Swope Park Trail", includes modular block wall with footings, crushed rock, subgrade preparation, 6-inch sidewalk, curbing and outlook concrete; reinforcing steel, expansion joints materials, handrails, handrail footings, signage and bike gap bollards. 8-inch concrete paving (8") is covered in the options.				
				NET AMT	

FOB: Destination

ITEM NO	SUPPLIES/SERVICES	QUANTITY	UNIT	UNIT PRICE	AMOUNT
0022			Lump Sum		
	Drop Structure FFP "Drop Structure", includes select material; 4-inch drainpipe; 1-inch sponge rubber; coarse filter; reinforced drop structure concrete and 4-inch perforated pipe.				
				NET AMT	

FOB: Destination

ITEM NO	SUPPLIES/SERVICES	QUANTITY	UNIT	UNIT PRICE	AMOUNT
0023			Lump Sum		
	Dam No.1 FFP "Dam No. 1", includes structural dam reinforced concrete and gravity wall concrete.				
				NET AMT	

FOB: Destination

ITEM NO	SUPPLIES/SERVICES	QUANTITY	UNIT	UNIT PRICE	AMOUNT
0024			Lump Sum		
	Dam No. 2 FFP "Dam No. 2", includes structural dam reinforced concrete and gravity wall concrete.				
				NET AMT	

FOB: Destination

ITEM NO	SUPPLIES/SERVICES	QUANTITY	UNIT	UNIT PRICE	AMOUNT
0025			Lump Sum		
	Dam No. 3 FFP "Dam No. 3", includes 1, structural dam reinforced concrete and rock anchors. Channel walls that are monolithic with dam structures are also included in this bid item.				
				NET AMT	

FOB: Destination

ITEM NO	SUPPLIES/SERVICES	QUANTITY	UNIT	UNIT PRICE	AMOUNT
0026			Lump Sum		
	Dam No. 4 FFP "Dam No. 4", includes structural dam reinforced concrete and select material				
				NET AMT	

FOB: Destination

ITEM NO	SUPPLIES/SERVICES	QUANTITY	UNIT	UNIT PRICE	AMOUNT
0027			Lump Sum		
	Dam No. 5 FFP Dam No. 5", includes structural dam reinforced concrete and select material.				
				NET AMT	

FOB: Destination

ITEM NO	SUPPLIES/SERVICES	QUANTITY	UNIT	UNIT PRICE	AMOUNT
0028			Lump Sum		
	Dam No. 6 FFP Dam No. 6", includes structural dam reinforced concrete and select material				

NET AMT

FOB: Destination

ITEM NO	SUPPLIES/SERVICES	QUANTITY	UNIT	UNIT PRICE	AMOUNT
0029		620	Square Yard		
	Anchored Walls FFP "Anchored Walls", includes reinforced concrete, wall anchors and drains.				

NET AMT

FOB: Destination

ITEM NO	SUPPLIES/SERVICES	QUANTITY	UNIT	UNIT PRICE	AMOUNT
0030		90	Square Yard		
	Gravity Walls FFP "Gravity Walls", includes gravity wall concrete outside of the definition of the dam in other bid items.				
				NET AMT	

FOB: Destination

ITEM NO	SUPPLIES/SERVICES	QUANTITY	UNIT	UNIT PRICE	AMOUNT
0031		2,130	Cubic Yard		
	L- Walls FFP "L-Walls", includes channel support walls outside of the definition of the dam in other bid items.				
				NET AMT	

FOB: Destination

ITEM NO	SUPPLIES/SERVICES	QUANTITY	UNIT	UNIT PRICE	AMOUNT
0032		90	Cubic Yard		
	T-Wall FFP "T-Walls", includes channel support walls outside of the definition of the dam in other bid items.				
				NET AMT	

FOB: Destination

ITEM NO	SUPPLIES/SERVICES	QUANTITY	UNIT	UNIT PRICE	AMOUNT
0033		6	Each		
	Dam Intake Drainage Structure FFP "Dam Intake Drainage Structures", includes the cost excavate the soils or shore and brace soils, place concrete with all steel and backfill control structure. The reinforced concrete pipe will be associated with each structure is considered incidental. Trash racks, grating, manhole covers, gate and gate assembles, that are associated with the Dam Intake Drainage Structures are included in this bid item.				
				NET AMT	

FOB: Destination

ITEM NO	SUPPLIES/SERVICES	QUANTITY	UNIT	UNIT PRICE	AMOUNT
0034			Lump Sum		

Pumpwell
FFP
"Pumpwell", includes all work required to construct the Pumpwell and to furnish and install the Pump. The grating and manhole cover associated with the Pumpwell are included in this bid item.

NET AMT

FOB: Destination

ITEM NO	SUPPLIES/SERVICES	QUANTITY	UNIT	UNIT PRICE	AMOUNT
0035			Lump Sum		

New Prospect Bridge
FFP
"New Prospect Bridge" includes all costs to maintain all traffic controls, miscellaneous excavations, place foundations supports, drilled foundation caissons (piers), H-piles, construct steel support, abutments, construct all bridge decking materials, aesthetic facing requirements, graffiti protection, all miscellaneous metals, permanent concrete traffic barriers, bridge railings, and geotextile fabric and bridge approach slabs indicated on the drawings.

NET AMT

FOB: Destination

ITEM NO	SUPPLIES/SERVICES	QUANTITY	UNIT	UNIT PRICE	AMOUNT
0036		110	Cubic Yard		

Monolith Walls
FFP
"Monolith Walls", includes all work required to construct reinforced concrete Monoliths A, B, C D and E.

NET AMT

FOB: Destination

ITEM NO	SUPPLIES/SERVICES	QUANTITY	UNIT	UNIT PRICE	AMOUNT
0037			Lump Sum		

Electrical Work
FFP
"Electrical Work", includes 16 bridge lights, 4 light fixtures mounted to the bridge sub-structure for walkway illumination, panel board HA, conduit crossing at Station 8+00 +/-, pullboxes PB1 and PB2, all associated work to connect with the KCPL switchgear and transformer, all associated power and control wiring of recirculating pump, water probes and associated wiring, and fountain conduit rough-in as shown on the drawings. It also includes, "Traffic Intersection Signal Work", all traffic signs and signals not covered in the New Prospect Bridge bid item.

NET AMT

FOB: Destination

ITEM NO	SUPPLIES/SERVICES	QUANTITY	UNIT	UNIT PRICE	AMOUNT
0038			Lump Sum		
	Prospect Ave-Pavement Curbs & Gutters FFP "Prospect Ave - Pavement, Curbs & Gutters, Walks & Islands, and Pavement Markings", includes asphalt intermediate course, surface course, subgrade preparation, base course, prime coat, and tack coat. The work also includes earthwork, concrete curbs and gutters, concrete sidewalks, ramps, and traffic islands, new pavement markings, and temporary signage and flagmen, as required.				
				NET AMT	

FOB: Destination

ITEM NO	SUPPLIES/SERVICES	QUANTITY	UNIT	UNIT PRICE	AMOUNT
0039			Lump Sum		
	Ramp Bollards with Chains FFP " Ramp Bollards with Chains", include Bollards and equipment associated with access to the channel; and all excavations and backfill required to install the system.				
				NET AMT	

FOB: Destination

ITEM NO	SUPPLIES/SERVICES	QUANTITY	UNIT	UNIT PRICE	AMOUNT
0040			Each		
	Traffic InersectionSignal Light FFP Traffic Inersection Signal Light, includes all work required to provide traffic signals and signs.				
				NET AMT	

FOB: Destination

ITEM NO	SUPPLIES/SERVICES	QUANTITY	UNIT	UNIT PRICE	AMOUNT
0041			Lump Sum		
	Detour Signage FFP "Detour Signage", includes obtaining permits from Mo. Department of Transportation and the City of Kansas City, Missouri, placing and maintaining detour signs, barriers, barricades, and signal lighting.				
				NET AMT	

FOB: Destination

ITEM NO	SUPPLIES/SERVICES	QUANTITY	UNIT	UNIT PRICE	AMOUNT
0042		1	Lump Sum		
	Water Line FFP "Water Line" includes water line pipe, thrust blocks, valves, concrete, trenching, bedding, connections, and the disinfecting and testing of the new water line.				
				NET AMT	

FOB: Destination

ITEM NO	SUPPLIES/SERVICES	QUANTITY	UNIT	UNIT PRICE	AMOUNT
0043			Lump Sum		
	Re-circulation System FFP "Re-circulation System", includes excavation, bedding, backfill, pipe, thrust blocks, valves, valve housings, reducers, and grate as indicated for the recirculation system and excavation, bedding, and backfill for fountain piping.				
				NET AMT	

FOB: Destination

ITEM NO	SUPPLIES/SERVICES	QUANTITY	UNIT	UNIT PRICE	AMOUNT
0044			Lump Sum		
OPTION	Swope Parkway Concrete Pavement FFP "Swope Parkway Concrete Pavement", includes forms, reinforcing, 400 cubic yards of 8-inch concrete pavement with joints, finishing & curing.				
				NET AMT	

FOB: Destination

ITEM NO	SUPPLIES/SERVICES	QUANTITY	UNIT	UNIT PRICE	AMOUNT
0045			Lump Sum		
OPTION	Sidewalk Lights FFP "Sidewalk Lights", includes, but is not limited to light poles, conduit, wiring, lighting cabinet, as indicated on the drawings.				
				NET AMT	

FOB: Destination

ITEM NO	SUPPLIES/SERVICES	QUANTITY	UNIT	UNIT PRICE	AMOUNT
0046 OPTION	Plantings FFP "Plantings", includes providing the list of planting shown in the specifications and planting at locations to be determined by the Kansas City, Missouri, Parks and Recreation Department.				
				NET AMT	

FOB: Destination

ITEM NO	SUPPLIES/SERVICES	QUANTITY	UNIT	UNIT PRICE	AMOUNT
0046AA OPTION	Red Sunset Maple (2 1/2-in. cal.) FFP	12	Each		
				NET AMT	

FOB: Destination

ITEM NO	SUPPLIES/SERVICES	QUANTITY	UNIT	UNIT PRICE	AMOUNT
0046AB OPTION	Heritage River Birch (2 1/2-in. cal.) FFP	7	Each		
				NET AMT	

FOB: Destination

ITEM NO	SUPPLIES/SERVICES	QUANTITY	UNIT	UNIT PRICE	AMOUNT
0046AC OPTION	Cercis Canadensis Redbud (1 1/2-in. cal) FFP	6	Each		
				NET AMT	

FOB: Destination

ITEM NO	SUPPLIES/SERVICES	QUANTITY	UNIT	UNIT PRICE	AMOUNT
0046AD OPTION	Flowering Dogwood (1 1/2-in. cal) FFP	8	Each		
				NET AMT	

FOB: Destination

ITEM NO	SUPPLIES/SERVICES	QUANTITY	UNIT	UNIT PRICE	AMOUNT
0046AE OPTION	Autumn Purple Ash (2 1/2-in. cal) FFP	15	Each		
				NET AMT	

FOB: Destination

ITEM NO	SUPPLIES/SERVICES	QUANTITY	UNIT	UNIT PRICE	AMOUNT
0046AF OPTION	American Holly (2 1/2-in. cal) FFP	4	Each		
				NET AMT	

FOB: Destination

ITEM NO	SUPPLIES/SERVICES	QUANTITY	UNIT	UNIT PRICE	AMOUNT
0046AG OPTION	Sargent Crabapple (1 1/2-in. cal) FFP	12	Each		
				NET AMT	

FOB: Destination

ITEM NO	SUPPLIES/SERVICES	QUANTITY	UNIT	UNIT PRICE	AMOUNT
0046AH OPTION	Black Gum (2-in. cal) FFP	3	Each		
				NET AMT	

FOB: Destination

ITEM NO	SUPPLIES/SERVICES	QUANTITY	UNIT	UNIT PRICE	AMOUNT
0046AJ OPTION	White Pine (8-feet in height) FFP	31	Each		
				NET AMT	

FOB: Destination

ITEM NO	SUPPLIES/SERVICES	QUANTITY	UNIT	UNIT PRICE	AMOUNT
0046AK OPTION	London Planetree (2 1/2-in. cal) FFP	10	Each		
				NET AMT	

FOB: Destination

ITEM NO	SUPPLIES/SERVICES	QUANTITY	UNIT	UNIT PRICE	AMOUNT
0046AL OPTION	Swamp White Oak (2 1/2-in cal) FFP	5	Each		
				NET AMT	

FOB: Destination

ITEM NO	SUPPLIES/SERVICES	QUANTITY	UNIT	UNIT PRICE	AMOUNT
0046AM OPTION	Red Oak (2 1/2-in. cal) FFP	6	Each		
				NET AMT	

FOB: Destination

ITEM NO	SUPPLIES/SERVICES	QUANTITY	UNIT	UNIT PRICE	AMOUNT
0046AN OPTION	Bald Cypress (2 1/2-in. cal) FFP	7	Each		
				NET AMT	

FOB: Destination

ITEM NO	SUPPLIES/SERVICES	QUANTITY	UNIT	UNIT PRICE	AMOUNT
0046AP OPTION	Chanticleer Pear (2 1/2-in. cal) FFP	12	Each		
				NET AMT	

FOB: Destination

ITEM NO	SUPPLIES/SERVICES	QUANTITY	UNIT	UNIT PRICE	AMOUNT
0046AQ OPTION	Watering all Trees FFP		Lump Sum		
				NET AMT	

FOB: Destination

ITEM NO	SUPPLIES/SERVICES	QUANTITY	UNIT	UNIT PRICE	AMOUNT
0047 OPTION	Truf Reinforcement Mat FFP "Turf Reinforcement Mat", includes all work required to provide furnish and install the Turf Reinforcement Mat, as indicated in the specifications	120,000	Square Foot		
				NET AMT	

FOB: Destination

ITEM NO	SUPPLIES/SERVICES	QUANTITY	UNIT	UNIT PRICE	AMOUNT
0048		4,000	Square Yard		
OPTION	Paved Slope Protection FFP "Paved Slope Protection", includes all work required to furnish and install the additional rock and concrete slope protection, as indicated in the specifications.				
				NET AMT	

FOB: Destination

ITEM NO	SUPPLIES/SERVICES	QUANTITY	UNIT	UNIT PRICE	AMOUNT
0049			Lump Sum		
OPTION	Invert Channel Protection FFP "Invert Channel Protection", (Sta. 12+70 to 30+80), includes all work required to provide 12,000 tons of tabular blocks of sound durable limestone. The work also includes 12-inch Reinforced Concrete Channel Accessway.				
				NET AMT	

FOB: Destination

ITEM NO	SUPPLIES/SERVICES	QUANTITY	UNIT	UNIT PRICE	AMOUNT
0050		2,275	Square Yard		
OPTION	18-inch Concrete Channel Pavement FFP "18-inch Concrete Channel Pavement", includes all work required to provide 18-inch concrete channel pavement, in the Reach between the Prospect Bridge and Dam No. 3. The work includes anchors, reinforcing steel and drains, as shown on the drawings.				
				NET AMT	

FOB: Destination

INSPECTION AND ACCEPTANCE

Supplies/services will be inspected/accepted at:

CLIN	INSPECT AT	INSPECT BY	ACCEPT AT	ACCEPT BY
0001	N/A	N/A	N/A	N/A

DELIVERIES AND PERFORMANCE

CLIN	DELIVERY DATE	QUANTITY	SHIP TO ADDRESS	UIC
0001	13-DEC-2002	1	N/A FOB: Destination	

CLAUSES INCORPORATED BY FULL TEXT

52.204-6 DATA UNIVERSAL NUMBERING SYSTEM (DUNS) NUMBER (JUN 99)

(a) The offeror shall enter, in the block with its name and address on the cover page of its offer, the annotation "DUNS" followed by the DUNS number that identifies the offeror's name and address exactly as stated in the offer.

(b) If the offeror does not have a DUNS number, it should contact Dun and Bradstreet directly to obtain one. A DUNS number will be provided immediately by telephone at no charge to the offeror. For information on obtaining a DUNS number, the offeror, if located within the United States, should call Dun and Bradstreet at 1-800-333-0505. The offeror should be prepared to provide the following information:

(1) Company name.

(2) Company address.

(3) Company telephone number.

(4) Line of business.

(5) Chief executive officer/key manager.

(6) Date the company was started.

(7) Number of people employed by the company.

(8) Company affiliation.

(c) Offerors located outside the United States may obtain the location and phone number of the local Dun and Bradstreet Information Services office from the Internet Home Page at http://www.customerservice@dnb.com. If an offeror is unable to locate a local service center, it may send an e-mail to Dun and Bradstreet at globalinfo@mail.dnb.com.

(End of provision)

52.215-1 INSTRUCTIONS TO OFFERORS--COMPETITIVE ACQUISITION (MAY 2001)

(a) Definitions. As used in this provision--

"Discussions" are negotiations that occur after establishment of the competitive range that may, at the Contracting Officer's discretion, result in the offeror being allowed to revise its proposal.

"In writing or written" means any worded or numbered expression which can be read, reproduced, and later communicated, and includes electronically transmitted and stored information.

"Proposal modification" is a change made to a proposal before the solicitation's closing date and time, or made in response to an amendment, or made to correct a mistake at any time before award.

"Proposal revision" is a change to a proposal made after the solicitation closing date, at the request of or as allowed by a Contracting Officer as the result of negotiations.

“Time”, if stated as a number of days, is calculated using calendar days, unless otherwise specified, and will include Saturdays, Sundays, and legal holidays. However, if the last day falls on a Saturday, Sunday, or legal holiday, then the period shall include the next working day.

(b) Amendments to solicitations. If this solicitation is amended, all terms and conditions that are not amended remain unchanged. Offerors shall acknowledge receipt of any amendment to this solicitation by the date and time specified in the amendment(s).

(c) Submission, modification, revision, and withdrawal of proposals. (1) Unless other methods (e.g., electronic commerce or facsimile) are permitted in the solicitation, proposals and modifications to proposals shall be submitted in paper media in sealed envelopes or packages (i) addressed to the office specified in the solicitation, and (ii) showing the time and date specified for receipt, the solicitation number, and the name and address of the offeror. Offerors using commercial carriers should ensure that the proposal is marked on the outermost wrapper with the information in paragraphs (c)(1)(i) and (c)(1)(ii) of this provision.

(2) The first page of the proposal must show--

(i) The solicitation number;

(ii) The name, address, and telephone and facsimile numbers of the offeror (and electronic address if available);

(iii) A statement specifying the extent of agreement with all terms, conditions, and provisions included in the solicitation and agreement to furnish any or all items upon which prices are offered at the price set opposite each item;

(iv) Names, titles, and telephone and facsimile numbers (and electronic addresses if available) of persons authorized to negotiate on the offeror's behalf with the Government in connection with this solicitation; and

(v) Name, title, and signature of person authorized to sign the proposal. Proposals signed by an agent shall be accompanied by evidence of that agent's authority, unless that evidence has been previously furnished to the issuing office.

(3) Submission, modification, or revision, of proposals.

(i) Offerors are responsible for submitting proposals, and any modifications, or revisions, so as to reach the Government office designated in the solicitation by the time specified in the solicitation. If no time is specified in the solicitation, the time for receipt is 4:30 p.m., local time, for the designated Government office on the date that proposal or revision is due.

(ii)(A) Any proposal, modification, or revision received at the Government office designated in the solicitation after the exact time specified for receipt of offers is “late” and will not be considered unless it is received before award is made, the Contracting Officer determines that accepting the late offer would not unduly delay the acquisition; and--

(1) If it was transmitted through an electronic commerce method authorized by the solicitation, it was received at the initial point of entry to the Government infrastructure not later than 5:00 p.m. one working day prior to the date specified for receipt of proposals; or

(2) There is acceptable evidence to establish that it was received at the Government installation designated for receipt of offers and was under the Government's control prior to the time set for receipt of offers; or

(3) It is the only proposal received.

(B) However, a late modification of an otherwise successful proposal that makes its terms more favorable to the Government, will be considered at any time it is received and may be accepted.

(iii) Acceptable evidence to establish the time of receipt at the Government installation includes the time/date stamp of that installation on the proposal wrapper, other documentary evidence of receipt maintained by the installation, or oral testimony or statements of Government personnel.

(iv) If an emergency or unanticipated event interrupts normal Government processes so that proposals cannot be received at the office designated for receipt of proposals by the exact time specified in the solicitation, and urgent Government requirements preclude amendment of the solicitation, the time specified for receipt of proposals will be deemed to be extended to the same time of day specified in the solicitation on the first work day on which normal Government processes resume.

(v) Proposals may be withdrawn by written notice received at any time before award. Oral proposals in response to oral solicitations may be withdrawn orally. If the solicitation authorizes facsimile proposals, proposals may be withdrawn via facsimile received at any time before award, subject to the conditions specified in the provision at 52.215-5, Facsimile Proposals. Proposals may be withdrawn in person by an offeror or an authorized representative, if the identity of the person requesting withdrawal is established and the person signs a receipt for the proposal before award.

(4) Unless otherwise specified in the solicitation, the offeror may propose to provide any item or combination of items.

(5) Offerors shall submit proposals in response to this solicitation in English, unless otherwise permitted by the solicitation, and in U.S. dollars, unless the provision at FAR 52.225-17, Evaluation of Foreign Currency Offers, is included in the solicitation.

(6) Offerors may submit modifications to their proposals at any time before the solicitation closing date and time, and may submit modifications in response to an amendment, or to correct a mistake at any time before award.

(7) Offerors may submit revised proposals only if requested or allowed by the Contracting Officer.

(8) Proposals may be withdrawn at any time before award. Withdrawals are effective upon receipt of notice by the Contracting Officer.

(d) Offer expiration date. Proposals in response to this solicitation will be valid for the number of days specified on the solicitation cover sheet (unless a different period is proposed by the offeror).

(e) Restriction on disclosure and use of data. Offerors that include in their proposals data that they do not want disclosed to the public for any purpose, or used by the Government except for evaluation purposes, shall--

(1) Mark the title page with the following legend: This proposal includes data that shall not be disclosed outside the Government and shall not be duplicated, used, or disclosed--in whole or in part--for any purpose other than to evaluate this proposal. If, however, a contract is awarded to this offeror as a result of--or in connection with-- the submission of this data, the Government shall have the right to duplicate, use, or disclose the data to the extent provided in the resulting contract. This restriction does not limit the Government's right to use information contained in this data if it is obtained from another source without restriction. The data subject to this restriction are contained in sheets [insert numbers or other identification of sheets]; and

(2) Mark each sheet of data it wishes to restrict with the following legend: Use or disclosure of data contained on this sheet is subject to the restriction on the title page of this proposal.

(f) Contract award. (1) The Government intends to award a contract or contracts resulting from this solicitation to the responsible offeror(s) whose proposal(s) represents the best value after evaluation in accordance with the factors and

subfactors in the solicitation.

(2) The Government may reject any or all proposals if such action is in the Government's interest.

(3) The Government may waive informalities and minor irregularities in proposals received.

(4) The Government intends to evaluate proposals and award a contract without discussions with offerors (except clarifications as described in FAR 15.306(a)). Therefore, the offeror's initial proposal should contain the offeror's best terms from a cost or price and technical standpoint. The Government reserves the right to conduct discussions if the Contracting Officer later determines them to be necessary. If the Contracting Officer determines that the number of proposals that would otherwise be in the competitive range exceeds the number at which an efficient competition can be conducted, the Contracting Officer may limit the number of proposals in the competitive range to the greatest number that will permit an efficient competition among the most highly rated proposals.

(5) The Government reserves the right to make an award on any item for a quantity less than the quantity offered, at the unit cost or prices offered, unless the offeror specifies otherwise in the proposal.

(6) The Government reserves the right to make multiple awards if, after considering the additional administrative costs, it is in the Government's best interest to do so.

(7) Exchanges with offerors after receipt of a proposal do not constitute a rejection or counteroffer by the Government.

(8) The Government may determine that a proposal is unacceptable if the prices proposed are materially unbalanced between line items or subline items. Unbalanced pricing exists when, despite an acceptable total evaluated price, the price of one or more contract line items is significantly overstated or understated as indicated by the application of cost or price analysis techniques. A proposal may be rejected if the Contracting Officer determines that the lack of balance poses an unacceptable risk to the Government.

(9) If a cost realism analysis is performed, cost realism may be considered by the source selection authority in evaluating performance or schedule risk.

(10) A written award or acceptance of proposal mailed or otherwise furnished to the successful offeror within the time specified in the proposal shall result in a binding contract without further action by either party.

(11) The Government may disclose the following information in postaward debriefings to other offerors:

(i) The overall evaluated cost or price and technical rating of the successful offeror;

(ii) The overall ranking of all offerors, when any ranking was developed by the agency during source selection;

(iii) A summary of the rationale for award; and

(iv) For acquisitions of commercial items, the make and model of the item to be delivered by the successful offeror.

(End of provision)

52.216-1 TYPE OF CONTRACT (APR 1984)

The Government contemplates award of a FIRM FIXED PRICED contract resulting from this solicitation.

(End of clause)

52.217-5 EVALUATION OF OPTIONS (JUL 1990)

(a) Except when it is determined in accordance with FAR 17.206(b) not to be in the Government's best interests, the Government will evaluate offers for award purposes by adding the total price for all options to the total price for the basic requirement. Evaluation of options will not obligate the Government to exercise the option(s).

(b) The Government may reject an offer as nonresponsive if it is materially unbalanced as to prices for the basic requirement and the option quantities. An offer is unbalanced when it is based on prices significantly less than cost for some work and prices which are significantly overstated for other work.

(End of provision)

52.219-4 NOTICE OF PRICE EVALUATION PREFERENCE FOR HUBZONE SMALL BUSINESS CONCERNS (JAN 1999)

(a) Definition. HUBZone small business concern, as used in this clause, means a small business concern that appears on the List of Qualified HUBZone Small Business Concerns maintained by the Small Business Administration.

(b) Evaluation preference. (1) Offers will be evaluated by adding a factor of 10 percent to the price of all offers, except--

(i) Offers from HUBZone small business concerns that have not waived the evaluation preference;

(ii) Otherwise successful offers from small business concerns;

(iii) Otherwise successful offers of eligible products under the Trade Agreements Act when the dollar threshold for application of the Act is exceeded (see 25.402 of the Federal Acquisition Regulation (FAR)); and

(iv) Otherwise successful offers where application of the factor would be inconsistent with a Memorandum of Understanding or other international agreement with a foreign government.

(2) The factor of 10 percent shall be applied on a line item basis or to any group of items on which award may be made. Other evaluation factors described in the solicitation shall be applied before application of the factor.

(3) A concern that is both a HUBZone small business concern and a small disadvantaged business concern will receive the benefit of both the HUBZone small business price evaluation preference and the small disadvantaged business price evaluation adjustment (see FAR clause 52.219-23). Each applicable price evaluation preference or adjustment shall be calculated independently against an offeror's base offer.

These individual preference amounts shall be added together to arrive at the total evaluated price for that offer.

(c) Waiver of evaluation preference. A HUBZone small business concern may elect to waive the evaluation preference, in which case the factor will be added to its offer for evaluation purposes. The agreements in paragraph (d) of this clause do not apply if the offeror has waived the evaluation preference.

___ Offeror elects to waive the evaluation preference.

(d) Agreement. A HUBZone small business concern agrees that in the performance of the contract, in the case of a contract for

(1) Services (except construction), at least 50 percent of the cost of personnel for contract performance will be spent for employees of the concern or employees of other HUBZone small business concerns;

(2) Supplies (other than procurement from a nonmanufacturer of such supplies), at least 50 percent of the cost of manufacturing, excluding the cost of materials, will be performed by the concern or other HUBZone small business concerns;

(3) General construction, at least 15 percent of the cost of the contract performance incurred for personnel will be will be spent on the concern's employees or the employees of other HUBZone small business concerns; or

(4) Construction by special trade contractors, at least 25 percent of the cost of the contract performance incurred for personnel will be spent on the concern's employees or the employees of other HUBZone small business concerns.

(e) A HUBZone joint venture agrees that in the performance of the contract, the applicable percentage specified in paragraph (d) of this clause will be performed by the HUBZone small business participant or participants.

(f) A HUBZone small business concern nonmanufacturer agrees to furnish in performing this contract only end items manufactured or produced by HUBZone small business manufacturer concerns. This paragraph does not apply in connection with construction or service contracts.

(End of clause)

52.222-12 CONTRACT TERMINATION--DEBARMENT (FEB 1988)

A breach of the contract clauses entitled Davis-Bacon Act, Contract Work Hours and Safety Standards Act--Overtime Compensation, Apprentices and Trainees, Payrolls and Basic Records, Compliance with Copeland Act Requirements, Subcontracts (Labor Standards), Compliance with Davis-Bacon and Related Act Regulations, or Certification of Eligibility may be grounds for termination of the contract, and for debarment as a Contractor and subcontractor as provided in 29 CFR 5.12.

(End of clause)

52.232-33 PAYMENT BY ELECTRONIC FUNDS TRANSFER—CENTRAL CONTRACTOR REGISTRATION (MAY 1999)

(a) Method of payment. (1) All payments by the Government under this contract shall be made by electronic funds transfer (EFT), except as provided in paragraph (a)(2) of this clause. As used in this clause, the term “EFT” refers to the funds transfer and may also include the payment information transfer.

(2) In the event the Government is unable to release one or more payments by EFT, the Contractor agrees to either--

(i) Accept payment by check or some other mutually agreeable method of payment; or

(ii) Request the Government to extend the payment due date until such time as the Government can make payment by EFT (but see paragraph (d) of this clause).

(b) Contractor's EFT information. The Government shall make payment to the Contractor using the EFT information contained in the Central Contractor Registration (CCR) database. In the event that the EFT information changes, the Contractor shall be responsible for providing the updated information to the CCR database.

(c) Mechanisms for EFT payment. The Government may make payment by EFT through either the Automated Clearing House (ACH) network, subject to the rules of the National Automated Clearing House Association, or the Fedwire Transfer System. The rules governing Federal payments through the ACH are contained in 31 CFR part 210.

(d) Suspension of payment. If the Contractor's EFT information in the CCR database is incorrect, then the Government need not make payment to the Contractor under this contract until correct EFT information is entered into the CCR database; and any invoice or contract financing request shall be deemed not to be a proper invoice for the purpose of prompt payment under this contract. The prompt payment terms of the contract regarding notice of an improper invoice and delays in accrual of interest penalties apply.

(e) Contractor EFT arrangements. If the Contractor has identified multiple payment receiving points (i.e., more than one remittance address and/or EFT information set) in the CCR database, and the Contractor has not notified the Government of the payment receiving point applicable to this contract, the Government shall make payment to the first payment receiving point (EFT information set or remittance address as applicable) listed in the CCR database.

(f) Liability for uncompleted or erroneous transfers. (1) If an uncompleted or erroneous transfer occurs because the Government used the Contractor's EFT information incorrectly, the Government remains responsible for--

(i) Making a correct payment;

(ii) Paying any prompt payment penalty due; and

(iii) Recovering any erroneously directed funds.

(2) If an uncompleted or erroneous transfer occurs because the Contractor's EFT information was incorrect, or was revised within 30 days of Government release of the EFT payment transaction instruction to the Federal Reserve System, and--

(i) If the funds are no longer under the control of the payment office, the Government is deemed to have made payment and the Contractor is responsible for recovery of any erroneously directed funds; or

(ii) If the funds remain under the control of the payment office, the Government shall not make payment, and the provisions of paragraph (d) of this clause shall apply.

(g) EFT and prompt payment. A payment shall be deemed to have been made in a timely manner in accordance with the prompt payment terms of this contract if, in the EFT payment transaction instruction released to the Federal Reserve System, the date specified for settlement of the payment is on or before the prompt payment due date, provided the specified payment date is a valid date under the rules of the Federal Reserve System.

(h) EFT and assignment of claims. If the Contractor assigns the proceeds of this contract as provided for in the assignment of claims terms of this contract, the Contractor shall require as a condition of any such assignment, that the assignee shall register in the CCR database and shall be paid by EFT in accordance with the terms of this clause. In all respects, the requirements of this clause shall apply to the assignee as if it were the Contractor. EFT information that shows the ultimate recipient of the transfer to be other than the Contractor, in the absence of a proper assignment of claims acceptable to the Government, is incorrect EFT information within the meaning of paragraph (d) of this clause.

(i) Liability for change of EFT information by financial agent. The Government is not liable for errors resulting from changes to EFT information made by the Contractor's financial agent.

(j) Payment information. The payment or disbursing office shall forward to the Contractor available payment information that is suitable for transmission as of the date of release of the EFT instruction to the Federal Reserve System. The Government may request the Contractor to designate a desired format and method(s) for delivery of

payment information from a list of formats and methods the payment office is capable of executing. However, the Government does not guarantee that any particular format or method of delivery is available at any particular payment office and retains the latitude to use the format and delivery method most convenient to the Government. If the Government makes payment by check in accordance with paragraph (a) of this clause, the Government shall mail the payment information to the remittance address contained in the CCR database.

(End of Clause)

52.233-2 SERVICE OF PROTEST (AUG 1996)

(a) Protests, as defined in section 33.101 of the Federal Acquisition Regulation, that are filed directly with an agency, and copies of any protests that are filed with the General Accounting Office (GAO), shall be served on the Contracting Officer (addressed as follows) by obtaining written and dated acknowledgment of receipt from U.S. Army Corps of Engineers, Kansas District, 601 East 12th Street, Kansas City, Missouri 64104

(b) The copy of any protest shall be received in the office designated above within one day of filing a protest with the GAO.

(End of provision)

52.236-27 SITE VISIT (CONSTRUCTION) (FEB 1995)

(a) The clauses at 52.236-2, Differing Site Conditions, and 52.236-3, Site Investigations and Conditions Affecting the Work, will be included in any contract awarded as a result of this solicitation. Accordingly, offerors or quoters are urged and expected to inspect the site where the work will be performed.

(b) Site visits may be arranged during normal duty hours by contacting:
Name: Kent Myers
Address: Corps of Engineers, Kansas City District
Telephone: 816-983-3399

© Pre-bid conference will be held at the Kansas City District Office, 601 East 12th Street, Federal Building, Kansas City, Missouri 64104 on the 6 March 2003 at 10:00 AM in room 164. Please enter the building through the 12th Street entrance.

(End of provision)

52.252-5 AUTHORIZED DEVIATIONS IN PROVISIONS (APR 1984)

(a) The use in this solicitation of any Federal Acquisition Regulation (48 CFR Chapter 1) provision with an authorized deviation is indicated by the addition of"(DEVIATION)" after the date of the provision.

(b) The use in this solicitation of any _____ (48 CFR Chapter _____) provision with an authorized deviation is indicated by the addition of "(DEVIATION)" after the name of the regulation.

(End of provision)

252.203-7001 PROHIBITION ON PERSONS CONVICTED OF FRAUD OR OTHER DEFENSE-CONTRACT-RELATED FELONIES (MAR 1999)

(a) Definitions. As used in this clause—

(1) "Arising out of a contract with the DoD" means any act in connection with—

(i) Attempting to obtain;

(ii) Obtaining, or

(iii) Performing a contract or first-tier subcontract of any agency, department, or component of the Department of Defense (DoD).

(2) "Conviction of fraud or any other felony" means any conviction for fraud or a felony in violation of state or Federal criminal statutes, whether entered on a verdict or plea, including a plea of *nolo contendere*, for which sentence has been imposed.

(3) "Date of conviction" means the date judgment was entered against the individual.

(b) Any individual who is convicted after September 29, 1988, of fraud or any other felony arising out of a contract with the DoD is prohibited from serving--

(1) In a management or supervisory capacity on any DoD contract or first-tier subcontract;

(2) On the board of directors of any DoD contractor or first-tier subcontractor;

(3) As a consultant, agent, or representative for any DoD contractor or first-tier subcontractor; or

(4) In any other capacity with the authority to influence, advise, or control the decisions of any DoD contractor or subcontractor with regard to any DoD contract or first-tier subcontract.

(c) Unless waived, the prohibition in paragraph (b) of this clause applies for not less than 5 years from the date of conviction.

(d) 10 U.S.C. 2408 provides that a defense contractor or first-tier subcontractor shall be subject to a criminal penalty of not more than $500,000 if convicted of knowingly—

(1) Employing a person under a prohibition specified in paragraph (b) of this clause; or

(2) Allowing such a person to serve on the board of directors of the contractor or first-tier subcontractor.

(e) In addition to the criminal penalties contained in 10 U.S.C. 2408, the Government may consider other available remedies, such as—

(1) Suspension or debarment;

(2) Cancellation of the contract at no cost to the Government; or

(3) Termination of the contract for default.

(f) The Contractor may submit written requests for waiver of the prohibition in paragraph (b) of this clause to the Contracting Officer. Requests shall clearly identify—

(1) The person involved;

(2) The nature of the conviction and resultant sentence or punishment imposed;

(3) The reasons for the requested waiver; and

(4) An explanation of why a waiver is in the interest of national security.

(g) The Contractor agrees to include the substance of this clause, appropriately modified to reflect the identity and relationship of the parties, in all first-tier subcontracts exceeding the simplified acquisition threshold in Part 2 of the Federal Acquisition Regulation, except those for commercial items or components.

(h) Pursuant to 10 U.S.C. 2408(c), defense contractors and subcontractors may obtain information as to whether a particular person has been convicted of fraud or any other felony arising out of a contract with the DoD by contacting The Office of Justice Programs, The Denial of Federal Benefits Office, U.S. Department of Justice, telephone (202) 616-3507.

(End of clause)

252.203-7001 PROHIBITION ON PERSONS CONVICTED OF FRAUD OR OTHER DEFENSE-CONTRACT-RELATED FELONIES (MAR 1999)

(a) Definitions. As used in this clause—

(1) “Arising out of a contract with the DoD” means any act in connection with—

(i) Attempting to obtain;

(ii) Obtaining, or

(iii) Performing a contract or first-tier subcontract of any agency, department, or component of the Department of Defense (DoD).

(2) “Conviction of fraud or any other felony” means any conviction for fraud or a felony in violation of state or Federal criminal statutes, whether entered on a verdict or plea, including a plea of *nolo contendere*, for which sentence has been imposed.

(3) “Date of conviction” means the date judgment was entered against the individual.

(b) Any individual who is convicted after September 29, 1988, of fraud or any other felony arising out of a contract with the DoD is prohibited from serving--

(1) In a management or supervisory capacity on any DoD contract or first-tier subcontract;

(2) On the board of directors of any DoD contractor or first-tier subcontractor;

(3) As a consultant, agent, or representative for any DoD contractor or first-tier subcontractor; or

(4) In any other capacity with the authority to influence, advise, or control the decisions of any DoD contractor or subcontractor with regard to any DoD contract or first-tier subcontract.

(c) Unless waived, the prohibition in paragraph (b) of this clause applies for not less than 5 years from the date of conviction.

(d) 10 U.S.C. 2408 provides that a defense contractor or first-tier subcontractor shall be subject to a criminal penalty of not more than $500,000 if convicted of knowingly—

(1) Employing a person under a prohibition specified in paragraph (b) of this clause; or

(2) Allowing such a person to serve on the board of directors of the contractor or first-tier subcontractor.

(e) In addition to the criminal penalties contained in 10 U.S.C. 2408, the Government may consider other available remedies, such as—

(1) Suspension or debarment;

(2) Cancellation of the contract at no cost to the Government; or

(3) Termination of the contract for default.

(f) The Contractor may submit written requests for waiver of the prohibition in paragraph (b) of this clause to the Contracting Officer. Requests shall clearly identify—

(1) The person involved;

(2) The nature of the conviction and resultant sentence or punishment imposed;

(3) The reasons for the requested waiver; and

(4) An explanation of why a waiver is in the interest of national security.

(g) The Contractor agrees to include the substance of this clause, appropriately modified to reflect the identity and relationship of the parties, in all first-tier subcontracts exceeding the simplified acquisition threshold in Part 2 of the Federal Acquisition Regulation, except those for commercial items or components.

(h) Pursuant to 10 U.S.C. 2408(c), defense contractors and subcontractors may obtain information as to whether a particular person has been convicted of fraud or any other felony arising out of a contract with the DoD by contacting The Office of Justice Programs, The Denial of Federal Benefits Office, U.S. Department of Justice, telephone (202) 616-3507.

(End of clause)

NWK-00100-001 FIELD OFFICE OVERHEAD PERCENTAGE MARKUP

If any change to the contract, issued pursuant to the changes Clause or otherwise, for which the Government is responsible, causes an increase or decrease in the Contractor's cost of, of the time required for, performance under the contract, the Contracting Officer shall make an equitable adjustment and modify the contract in writing.

Under such equitable adjustment, no per diem rate for field office overhead shall be allowed if the Contractor has elected a percentage markup in keeping with its standard accounting practices. In such a case, payment of field office overhead shall be allowed for any change on a percentage markup basis regardless of whether the completion

of the contract is or is not extended by reason of the change, except for modifications issued pursuant to the Default Clause. The Contractor shall provide a detailed breakdown of its proposed increase or decrease of costs as required by Contract Clause DFARS 252.236-7001 MODIFICATION OF PROPOSALS – PRICE BREAKDOWN.

NWK-00100-002 FIELD OFFICE OVERHEAD PER DIEM RATE

If any change to the contract, issued pursuant to the Changes Clause or otherwise, for which the Government is responsible, causes an increase or decrease in the Contractor's cost of, or the time required for, performance under the contract, the Contracting Officer shall make an equitable adjustment and modify the contract in writing.

Under such equitable adjustment, no payment of field office overhead shall be allowed for any changes when the completion of the contract is not extended by reason of the change, except the Contractor may be reimbursed any variable expense it incurs due to the change, provided it can substantiate the variables. The Contractor shall be reimbursed for field office overhead on a per diem basis when the completion of the contract is extended by reason of the change issued under any clause except the Default clause. Equitable adjustment shall be made for the costs that are incurred or are to be incurred due to the change. The Contractor shall provide a detailed breakdown of its proposed increase or decrease of costs as required by Contract Clause DFARS 252.236-7001 MODIFICATION OF PROPOSALS – PRICE BREAKDOWN.

NWK-00100-003 BID BOND REQUIREMENTS (DEC 1989) (FAR 28.101-2)

If your bid exceeds $50,000.00, the bid bond shall be in the amount of 20% of the bid price or $3,000,000, whichever is the lesser amount. (See CONTRACT CLAUSE titled "Bid Guarantee.")

NWK-00100-001 MAGNITUDE OF PROJECT (FAR 36.204)

The magnitude of this project is represented by the following estimated price range: between $5,000,000 and $10,000,000.

NOTES:

(1) Proposal prices must be entered for all items of the Proposal Schedule. Award will be made as a whole to one Contractor on the basis of price and other factors. Offeror's attention is directed to SECTION 00120 PROPOSAL EVALUATION AND CONTRACT AWARD for further details.

(2) CLIN 0001 through 0043, Base Schedule

CLIN 0044 through 0050, Options

(3) If a modification to an offer is submitted which provides for a lump sum adjustment to the total cost, the application of the lump sum adjustment to each price in the Proposal Schedule must be stated. If it is not stated, the offeror agrees that the lump sum adjustment shall be applied on a pro rata basis to every price in the Proposal Schedule.

(4) Offeror's attention is directed to SECTION 00100 paragraph titled "Arithmetic Discrepancies" wherein are procedures for correction of errors.

(5) Offeror's attention is directed to SECTION 01100: GENERAL for special provisions pertaining to this Solicitation.

(6) Offeror's attention is directed to SECTION 01100, paragraph titled "(State name) Sales and Use Tax".

(7) The general outline of the principal features of each item as listed does not in any way limit the responsibility of the offeror for making a thorough investigation of the drawings and specifications to determine the scope of work included in each item.

(8) Offeror's attention is directed to the CONTRACT CLAUSES wherein the apparent low offeror is required to submit a small business and small disadvantaged business subcontracting plan. The subcontracting plan shall be submitted in the format that appears at the end of SECTION 00600. Submission of the plan is required prior to award. Award will not be made under this solicitation before the Contracting Officer approves the plan.

(9) Determination of the Offeror's total price for the proposed work will be based on the TOTAL of the BASE SCHEDULE and OPTION SCHEDULE. Immediate award will be made of the BASE SCHEDULE. At the option of the Government, the OPTION SCHEDULE may be awarded at the proposal price after Notice of Award for the BASE SCHEDULE work. The Government does not guarantee any work beyond that of the BASE SCHEDULE. The Government reserves the right to pick up the OPTION SCHEDULE at the proposal price within 120 calendar days, after the Notice to Proceed. Offeror's attention is directed to SECTION 00100, paragraph titled "Evaluation of Options", for further details.

(10) Offeror's attention is directed to the CONTRACT CLAUSES, FAR 52.223-9, Certification and Estimate of Percentage of Recovered Material Content for EPA-Designated Items. Certification will be required upon contract completion unless the Contracting Officer has approved a waiver. The waiver must be approved prior to contract award.

SCR-DB-006 WARRANTY OF CONSTRUCTION WORK – AUG 1997

(a) In addition to any other warranties in this contract, the Contractor warrants, except as provided in paragraph (1) of this clause, that work performed under this contract conforms to the contract requirements and is free of any defect in equipment, material, or workmanship performed by the Contractor or any subcontractor or supplier at any tier.

(b) This warranty shall continue for a period of 1 year from the date of final acceptance of the work. If the Government takes possession of any part of the work before final acceptance, this warranty shall continue for a period of 1 year from the date the Government takes possession.

(c) The Contractor shall remedy at the Contractor’s expense any failure to conform, or any defect. In addition, the Contractor shall remedy at the Contractor's expense any damage to Government-owned or controlled real or personal property, when that damage is the result of:

(1) The Contractor's failure to conform to contract requirements; or

(2) Any defect of equipment, material, or workmanship.

(d) The Contractor shall restore any work damaged in fulfilling the terms and conditions of this clause. The Contractor's warranty with respect to work repaired or replaced will run for 1 year from the date of repair or replacement.

(e) The Contracting Officer shall notify the Contractor, in writing, within a reasonable time after the discovery of any failure, defect, or damage.

If the Contractor fails to remedy any failure, defect, or damage within a reasonable time after receipt of notice, the Government shall have the right to replace, repair, or otherwise remedy the failure, defect, or damage at the Contractor’s expense.

(g) With respect to all warranties, express or implied, from subcontractors, manufacturers, or suppliers for work performed and materials furnished under this contract, the Contractor shall--

Obtain all warranties that would be given in normal commercial practice;

Require all warranties to be executed, in writing, for the benefit of the Government, if directed by the Contracting Officer; and

Enforce all warranties for the benefit of the Government, if directed by the Contracting Officer.

(h) In the event the Contractor's warranty under paragraph (b) of this clause has expired, the Government may bring suit at its expense to enforce a subcontractor's, manufacturer's, or supplier's warranty.

(i) Unless a defect is caused by the negligence of the Contractor or subcontractor or supplier at any tier, the Contractor shall not be liable for the repair of any defects of material furnished by the Government nor for the repair of any damage that results from any defect in Government-furnished material or design.

(j) This warranty shall not limit the Government's rights under the Inspection and Acceptance clause of this contract with respect to latent defects, gross mistakes, or fraud.

(End of Clause)

Section 110 Subcontracting

NOTICE TO OFFERORS

If your firm is a large business and your bid exceeds $500,000 or more for services or $1,000,000 for construction, your attention is directed to the following provisions contained in the solicitation:

52.219-8, Utilization of Small, Small Disadvantaged and Women-Owned Business Concerns (Alternate I)
52.219-9, Small, Small Disadvantaged and Women-Owned Small Business Subcontracting Plan (Alternate I)
52.219-16, Liquidated Damages - Small Business Subcontracting Plan
52.226-1, Utilization of Indian Organizations and Indian-Owned Economic Enterprises

For your information, the United Army Corps of Engineers considers the following goals reasonable and achievable for fiscal year and during the performance of the resultant contract.

a. 61.4% of planned subcontracting dollars will be placed with all small business concerns.

b. 9.1% of planned subcontracting dollars will be placed with those small business concerns owned and controlled by socially and economically disadvantaged individuals.

c. 5% of planned subcontracting dollars will be placed with those small business concerns owned and controlled by women.

d. 3% of planned subcontracting dollars will be placed with those small business concerns owned and controlled by service disabled veterans.

e. There are no established goals for planned subcontracting dollars placed with those small business concerns owned and controlled by certified Hubzone concerns, small business concerns owned and controlled by

veterans, and Historic Black Colleges and/or Minority Institutions, however, subcontracting with these concerns is highly encouraged.

Goals included in any proposed subcontracting plan should be at least equal to those indicated above. If lesser goals are proposed, you must substantiate how the proposed plan represents the firm best effort to comply with the terms and conditions of the solicitation. Offerors are highly encouraged to become familiarize with the intent of the solicitation provisions and the elements of the subcontracting plan.

The subcontracting plan must contain, at a minimum, the elements set forth in solicitation provision 52.219-9. Proposed plans will be reviewed to ensure the plan represents the firm's best efforts to maximize subcontracting opportunities for small, small disadvantaged and women-owned businesses. Subcontracting plans require Contracting Officer approval prior to contract award.

Should the selected offeror fail to submit an acceptable subcontracting plan within the time limit prescribed by the Contracting Officer, the offeror will be considered ineligible for award. The approved subcontracting plan (to include goals) will become a material part of the contract. An example of a format of a subcontracting plan is attached for your information. The attached ***plan is an example only*** and should not be construed as the only acceptable subcontracting plan format. Any format will be acceptable provided the plan addresses each element as required by the Federal Acquisition Regulations and its supplements.

Should you have any questions or need assistance in developing your plan, please contact the assigned Contract Specialist or the District's Deputy for Small Business at 816-983-3927 or fax your inquiries to 816-426-2979.

SMALL, SMALL DISADVANTAGED AND WOMEN-OWNED
SMALL BUSINESS SUBCONTRACTING PLAN
EXAMPLE

DATE: _____

CONTRACTOR: _____

ADDRESS: _____

PHONE NO: _____

PROJECT TITLE: _____

SOLICITATION NO: _____

CONTRACT NO: _____

1. In accordance with the contract clauses at 52.219-8 and 52.219-9, *(name of contractor)* submits the following Subcontracting Plan for Small, Small Disadvantaged, and Women-owned Business Concerns.

2. Subcontracting goals for this contract:

a. Total contract amount is $_____.

b. Total dollars planned to be subcontracted (to all types of businesses): $_____.

Type of Subcontractor	Amount Planned to be Subcontracted	Percentage of Subcontracted Dollars
Large Business		%
Small Businesses		%
- Small Disadvantaged*		%
- Small Women-Owned		%
- Small Service Disabled Veterans Owned		%
- Small Veteran Owned		%
HubZone Concern		%
Historical Black College and Minority Institution		%
Total		100%

***NOTE:** *Women-owned businesses are not considered a small disadvantaged business. Do not include subcontract awards to women-owned businesses in your calculations unless the firm meets the definition of a small disadvantaged business.*

3. The principal items or areas we will subcontract under this contract are *(NOTE:* ***Construction contractors remember to include materials/supplies*** *when developing plan. Also, list each subcontracted task by Division and Section number):*

_____

a. Of the items or areas stated in 3; we plan to subcontract the following to Small Businesses:

_____

b. Of the items or areas stated in 3.a; we plan to subcontract the following to Small Disadvantaged Businesses:

_____

c. Of the items or areas stated in 3.a; we plan to subcontract the following to Small Women-Owned Businesses:

_____

d. Of the items or areas stated in 3.a; we plan to subcontract the following to Small Service Disabled Veterans-Owned Businesses:

_____

e. Of the items or areas stated in 3.a; we plan to subcontract the following to Small Veteran-Owned Businesses:

_____

f. Of the items or areas stated in 3; we plan to subcontract the following to Hub Zone concerns:

_____

g. Of the items or areas stated in 3; we plan to subcontract the following to Historically Black Colleges and Minority Institutions:

_____

*****NOTE: SEE LAST PAGE IF THIS SOLICITATION HAS OPTIONS** (delete this statement from your plan)*****

4. Provide a description of the method your firm used to develop the subcontracting goals in paragraph 2:

_____

_____

_____

_____

_____

5. Indirect costs were ( ) were not ( ) used in establishing subcontracting goals. ***If indirect costs are included in your goals, furnish a description of the method used to determine the proportionate share of indirect costs to be incurred with (i) small business concerns (ii) small disadvantaged business concerns and (iii) women-owned.***

6. The following individual will administer this Subcontracting Plan on behalf of (name of contractor):

Name: Title:

Address:

Telephone:

The aforementioned individual's specific duties will include, but is not limited to:

a. Developing and maintaining source lists of small, small disadvantaged and women-owned small business concerns. Sources used are the Small Business Administration's Procurement Automated Source System (PASS), the National Minority Purchasing Council Vendor Information Service, Minority Business Development Agency, US Department of Commerce, Local Minority Business Development Centers, Economic Development Centers, and National Center for American Indian Enterprise Development.

b. Assuring the inclusion of small, small disadvantaged, and women-owned small business concerns in all solicitations for products or services which they are capable of providing; and ensuring that all solicitations are structured to permit the maximum possible participation by small, small disadvantaged and women-owned small business concerns.

c. Establishing and maintaining records of all subcontract awards to ensure appropriate documentation of non-selection of bids submitted by a small, small disadvantaged business, or women-owned small business concerns.

d. Preparing and submitting the Subcontracting Report for Individual Contracts (SF 294) and the Summary Subcontract Report (SF 295) in accordance with instructions provided, and coordinating and preparing for all compliance reviews by Federal agencies.

e. Promoting activities necessary to further the intent of the subcontracting plan. Activities include motivational training of purchasing personnel; attendance at workshops, seminars and trade fairs conducted by or on behalf of small business and/or small disadvantaged and/or women-owned small business concerns; and general cooperation with members of the small, small disadvantaged and women-owned small business concerns or their representatives.

7. The following steps will be taken to ensure that small, small disadvantaged, and women-owned small business concerns receive notice of and have an equitable opportunity to compete for intended awards of subcontracts and/or purchase orders for the products and/or services describe in paragraph 4 above:

a. Sources will be requested through SBA's PASS system, business development organizations, minority and small business trade associations and at small, minority and women-owned small business procurement conferences; sources will be contacted; and bidding materials will be provided to all responding parties expressing an interest.

b. The firm will conduct and maintain internal motivational training to guide and encourage purchasing personnel to maintain source lists and guides to small, small disadvantaged, and women-owned small business concerns. Purchasing activities will be monitored to ensure sufficient time is allowed for interested offerors to prepare bids and to ensure continuous compliance with the approved Subcontracting Plan.

8. *[Name of contractor]* agrees that the clause entitled "Utilization of Small, Small Disadvantaged and Women-Owned Business Concerns" will be included in all subcontracts that offer further subcontracting opportunities. All subcontractors, except small business concerns, who receive subcontracts in excess of $500,000 ($1,000,000 in the case of construction) will be required to adopt a plan similar to this one. Such plans will be reviewed to assure that all minimum requirements of an acceptable subcontracting plan have been satisfied.

The acceptability of proposed goals shall be determined on a cases-by-case basis depending on the supplies/services involved, the availability of potential small, small disadvantaged, and women-owned subcontractors, and prior experience. Once approved and implemented, plans will be monitored through the submission of periodic reports or, as time and availability of funds permit, periodic visits to subcontractors facilities to review applicable records and subcontracting program progress.

9. The Firm agrees to submit periodic reports and cooperate in any studies or surveys required by the Contracting Activity or Small Business Administration to determine the extent of the firm compliance with the subcontracting plan.

10. *(Name of Contractor)* agrees to maintain at least the following types of records to document compliance with the Subcontracting Plan:

a. The names of all organizations, agencies, and associations contacted for small, small disadvantaged, and women-owned small business sources, along with records of attendance at conference, seminars and trade fairs where additional sources were developed.

b. Source lists, guides, and other data identifying small business concerns, small disadvantaged business concerns and women-owned small business concerns.

c. Records of subcontracts award in excess of $100,000 will demonstrate how small business concerns, small disadvantaged business concerns and women-owned business concerns were solicited or provide an explanation as to why these business concerns were not considered for subcontracting opportunities.

d. Records of subcontract award data to include subcontractor's name and address, to be kept on a contract-by-contract basis.

e. Minutes of internal motivational and training meetings held for the guidance and encouragement of purchasing personnel, and records of all monitoring activities performed for compliance evaluation.

f. Copies of SF 294 and SF 295 showing date and place of filing and copies of all other reports or results of reviews conducted by the contracting agency or other interested agencies of the Federal government to monitor our compliance with this Subcontracting Plan.

11. *(Name of Contractor)* will submit a SF 295, Summary Subcontract Report, on Corps of Engineers projects only. The SF 295 shall be completed and distributed in accordance with the Corps of engineers Supplemental Instructions. *(Name of Contractor)* will not report Corps of Engineers projects through any other Agency unless authorized by the Contracting Officer.

Contractor's Signature:_____

Typed Name:_____

Title:_____

Date:_____

This Plan is Accepted By:

_____
Contracting Officer

Date:_____

NOTE: *If this solicitation has options, the plan must contain separate goals for* ***each*** *option. EXAMPLE:*

1. Option #_____

a. Total contract amount is $_____.

b. Total dollars planned to be subcontracted (to all types of businesses): $_____.

Type of Subcontractor	Amount Planned to be Subcontracted	Percentage of Subcontracted Dollars
Large Business		%
Small Businesses		%
- Small Disadvantaged*		%
- Small Women-Owned		%
- Small Service Disabled Veterans Owned		%
- Small Veteran Owned		%
HubZone Concern		%
Historical Black College and Minority Institution		%
Total		100%

Section 00600 - Representations & Certifications

CLAUSES INCORPORATED BY FULL TEXT

52.203-2 CERTIFICATE OF INDEPENDENT PRICE DETERMINATION (APR 1985)

(a) The offeror certifies that --

(c) The prices in this offer have been arrived at independently, without, for the purpose of restricting competition, any consultation, communication, or agreement with any other offeror or competitor relating to –

(1) Those prices,

(i) The intention to submit an offer, or

(iii) The methods of factors used to calculate the prices offered:

(2) The prices in this offer have not been and will not be knowingly disclosed by the offeror, directly or indirectly, to any other offeror or competitor before bid opening (in the case of a sealed bid solicitation) or contract award (in the case of a negotiated solicitation) unless otherwise required by law; and

(3) No attempt has been made or will be made by the offeror to induce any other concern to submit or not to submit an offer for the purpose of restricting competition.

(b) Each signature on the offer is considered to be a certification by the signatory that the signatory --

(1) Is the person in the offeror's organization responsible for determining the prices offered in this bid or proposal, and that the signatory has not participated and will not participate in any action contrary to subparagraphs (a)(1) through (a)(3) of this provision; or

(2) (i) Has been authorized, in writing, to act as agent for the following principals in certifying that those principals have not participated, and will not participate in any action contrary to subparagraphs (a)(1) through (a)(3) of this provison _____ (insert full name of person(s) in the offeror's organization responsible for determining the prices offered in this bid or proposal, and the title of his or her position in the offeror's organization);

(ii) As an authorized agent, does certify that the principals named in subdivision (b)(2)(i) above have not participated, and will not participate, in any action contrary to subparagraphs (a)(1) through (a)(3) above; and

(iii) As an agent, has not personally participated, and will not participate, in any action contrary to subparagraphs (a)(1) through (a)(3) of this provision.

(c) If the offeror deletes or modifies subparagraph (a)(2) of this provision, the offeror must furnish with its offer a signed statement setting forth in detail the circumstances of the disclosure.

(End of clause)

52.203-3 GRATUITIES (APR 1984)

(a) The right of the Contractor to proceed may be terminated by written notice if, after notice and hearing, the agency head or a designee determines that the Contractor, its agent, or another representative--

(1) Offered or gave a gratuity (e.g., an entertainment or gift) to an officer, official, or employee of the Government; and

(2) Intended, by the gratuity, to obtain a contract or favorable treatment under a contract.

(b) The facts supporting this determination may be reviewed by any court having lawful jurisdiction.

(c) If this contract is terminated under paragraph (a) of this clause, the Government is entitled--

(1) To pursue the same remedies as in a breach of the contract; and

(2) In addition to any other damages provided by law, to exemplary damages of not less than 3 nor more than 10 times the cost incurred by the Contractor in giving gratuities to the person concerned, as determined by the agency head or a designee. (This subparagraph (c)(2) is applicable only if this contract uses money appropriated to the Department of Defense.)

(d) The rights and remedies of the Government provided in this clause shall not be exclusive and are in addition to any other rights and remedies provided by law or under this contract.

(End of clause)

52.203-5 COVENANT AGAINST CONTINGENT FEES (APR 1984)

(a) The Contractor warrants that no person or agency has been employed or retained to solicit or obtain this contract upon an agreement or understanding for a contingent fee, except a bona fide employee or agency. For breach or violation of this warranty, the Government shall have the right to annul this contract without liability or, in its discretion, to deduct from the contract price or consideration, or otherwise recover, the full amount of the contingent fee.

(b) "Bona fide agency," as used in this clause, means an established commercial or selling agency, maintained by a contractor for the purpose of securing business, that neither exerts nor proposes to exert improper influence to solicit or obtain Government contracts nor holds itself out as being able to obtain any Government contract or contracts through improper influence.

"Bona fide employee," as used in this clause, means a person, employed by a contractor and subject to the contractor's supervision and control as to time, place, and manner of performance, who neither exerts nor proposes to exert improper influence to solicit or obtain Government contracts nor holds out as being able to obtain any Government contract or contracts through improper influence.

"Contingent fee," as used in this clause, means any commission, percentage, brokerage, or other fee that is contingent upon the success that a person or concern has in securing a Government contract.

"Improper influence," as used in this clause, means any influence that induces or tends to induce a Government employee or officer to give consideration or to act regarding a Government contract on any basis other than the merits of the matter.

(End of clause)

52.204-3 TAXPAYER IDENTIFICATION (OCT 1998)

(a) Definitions.

“Common parent,” as used in this provision, means that corporate entity that owns or controls an affiliated group of corporations that files its Federal income tax returns on a consolidated basis, and of which the offeror is a member.

“Taxpayer Identification Number (TIN),” as used in this provision, means the number required by the Internal Revenue Service (IRS) to be used by the offeror in reporting income tax and other returns. The TIN may be either a Social Security Number or an Employer Identification Number.

(b) All offerors must submit the information required in paragraphs (d) through (f) of this provision to comply with debt collection requirements of 31 U.S.C. 7701(c) and 3325(d), reporting requirements of 26 U.S.C. 6041, 6041A, and 6050M, and implementing regulations issued by the IRS. If the resulting contract is subject to the payment reporting requirements described in Federal Acquisition Regulation (FAR) 4.904, the failure or refusal by the offeror to furnish the information may result in a 31 percent reduction of payments otherwise due under the contract.

(c) The TIN may be used by the Government to collect and report on any delinquent amounts arising out of the offeror's relationship with the Government (31 U.S.C. 7701(c)(3)). If the resulting contract is subject to the payment reporting requirements described in FAR 4.904, the TIN provided hereunder may be matched with IRS records to verify the accuracy of the offeror's TIN.

(d) Taxpayer Identification Number (TIN).

___ TIN:._____

___ TIN has been applied for.

___ TIN is not required because:

___ Offeror is a nonresident alien, foreign corporation, or foreign partnership that does not have income effectively connected with the conduct of a trade or business in the United States and does not have an office or place of business or a fiscal paying agent in the United States;

___ Offeror is an agency or instrumentality of a foreign government;

___ Offeror is an agency or instrumentality of the Federal Government.

(e) Type of organization.

___ Sole proprietorship;

___ Partnership;

___ Corporate entity (not tax-exempt);

___ Corporate entity (tax-exempt);

___ Government entity (Federal, State, or local);

___ Foreign government;

___ International organization per 26 CFR 1.6049-4;

___ Other _____

(f) Common parent.

___ Offeror is not owned or controlled by a common parent as defined in paragraph (a) of this provision.

___ Name and TIN of common parent:

Name _____

TIN _____

(End of provision)

52.204-5 WOMEN-OWNED BUSINESS (OTHER THAN SMALL BUSINESS) (MAY 1999)

(a) Definition. Women-owned business concern, as used in this provision, means a concern that is at least 51 percent owned by one or more women; or in the case of any publicly owned business, at least 51 percent of its stock is owned by one or more women; and whose management and daily business operations are controlled by one or more women.

(b) Representation. [Complete only if the offeror is a women-owned business concern and has not represented itself as a small business concern in paragraph (b)(1) of FAR 52.219-1, Small Business Program Representations, of this solicitation.] The offeror represents that it ( ) is a women-owned business concern.

(End of provision)

52.209-5 CERTIFICATION REGARDING DEBARMENT, SUSPENSION, PROPOSED DEBARMENT, AND OTHER RESPONSIBILITY MATTERS (DEC 2001)

(a)(1) The Offeror certifies, to the best of its knowledge and belief, that--

(i) The Offeror and/or any of its Principals--

(A) Are ( ) are not ( ) presently debarred, suspended, proposed for debarment, or declared ineligible for the award of contracts by any Federal agency;

(B) Have ( ) have not ( ), within a three-year period preceding this offer, been convicted of or had a civil judgment rendered against them for: commission of fraud or a criminal offense in connection with obtaining, attempting to obtain, or performing a public (Federal, state, or local) contract or subcontract; violation of Federal or state antitrust statutes relating to the submission of offers; or commission of embezzlement, theft, forgery, bribery, falsification or destruction of records, making false statements, tax evasion, or receiving stolen property; and

(C) Are ( ) are not ( ) presently indicted for, or otherwise criminally or civilly charged by a governmental entity with, commission of any of the offenses enumerated in subdivision (a)(1)(i)(B) of this provision.

(ii) The Offeror has ( ) has not ( ), within a three-year period preceding this offer, had one or more contracts terminated for default by any Federal agency.

(2) "Principals," for the purposes of this certification, means officers; directors; owners; partners; and, persons having primary management or supervisory responsibilities within a business entity (e.g., general manager; plant manager; head of a subsidiary, division, or business segment, and similar positions).

THIS CERTIFICATION CONCERNS A MATTER WITHIN THE JURISDICTION OF AN AGENCY OF THE UNITED STATES AND THE MAKING OF A FALSE, FICTITIOUS, OR FRAUDULENT CERTIFICATION

MAY RENDER THE MAKER SUBJECT TO PROSECUTION UNDER SECTION 1001, TITLE 18, UNITED STATES CODE.

(b) The Offeror shall provide immediate written notice to the Contracting Officer if, at any time prior to contract award, the Offeror learns that its certification was erroneous when submitted or has become erroneous by reason of changed circumstances.

(c) A certification that any of the items in paragraph (a) of this provision exists will not necessarily result in withholding of an award under this solicitation. However, the certification will be considered in connection with a determination of the Offeror's responsibility. Failure of the Offeror to furnish a certification or provide such additional information as requested by the Contracting Officer may render the Offeror nonresponsible.

(d) Nothing contained in the foregoing shall be construed to require establishment of a system of records in order to render, in good faith, the certification required by paragraph (a) of this provision. The knowledge and information of an Offeror is not required to exceed that which is normally possessed by a prudent person in the ordinary course of business dealings.

(e) The certification in paragraph (a) of this provision is a material representation of fact upon which reliance was placed when making award. If it is later determined that the Offeror knowingly rendered an erroneous certification, in addition to other remedies available to the Government, the Contracting Officer may terminate the contract resulting from this solicitation for default.

(End of provision)

52.214-14 PLACE OF PERFORMANCE--SEALED BIDDING (APR 1985)

(a) The bidder, in the performance of any contract resulting from this solicitation, [ ] intends, [ ] does not intend [check applicable box] to use one or more plants or facilities located at a different address from the address of the bidder as indicated in this bid.

(b) If the bidder checks "intends" in paragraph (a) above, it shall insert in the spaces provided below the required information:

Place of Performance (Street, Address, City, County, State, Zip Code)	Name and Address of Owner and Operator of the Plant or Facility if Other than Bidder
_____	_____
_____	_____
_____	_____
_____	_____

(End of provision)

52.215-7 ANNUAL REPRESENTATIONS AND CERTIFICATIONS--NEGOTIATION (OCT 1997)

The offeror has (check the appropriate block):

_____ (a) Submitted to the contracting office issuing this solicitation, annual representations and certifications dated _____ (insert date of signature on submission) that are incorporated herein by reference, and are current,

accurate, and complete as of the date of this proposal, except as follows [insert changes that affect only this proposal; if “none,” so state]:

_____ (b) Enclosed its annual representations and certifications.

(End of provision)

52.219-1 SMALL BUSINESS PROGRAM REPRESENTATIONS (APR 2002)

(a)(1) The North American Industry Classification System (NAICS) code for this acquisition is ( ) (insert NAICS code).

(2) The small business size standard is ( ) (insert size standard).

(3) The small business size standard for a concern which submits an offer in its own name, other than on a construction or service contract, but which proposes to furnish a product which it did not itself manufacture, is 500 employees.

(b) Representations. (1) The offeror represents as part of its offer that it ( ) is, ( ) is not a small business concern.

(2) (Complete only if the offeror represented itself as a small business concern in paragraph (b)(1) of this provision.) The offeror represents, for general statistical purposes, that it ( ) is, ( ) is not a small disadvantaged business concern as defined in 13 CFR 124.1002.

(3) (Complete only if the offeror represented itself as a small business concern in paragraph (b)(1) of this provision.) The offeror represents as part of its offer that it ( ) is, ( ) is not a women-owned small business concern.

(4) (Complete only if the offeror represented itself as a small business concern in paragraph (b)(1) of this provision.) The offeror represents as part of its offer that it ( ) is, ( ) is not a veteran-owned small business concern.

(5) (Complete only if the offeror represented itself as a veteran-owned small business concern in paragraph (b)(4) of this provision.) The offeror represents as part of its offer that it ( ) is, ( ) is not a service-disabled veteran-owned small business concern.

(6) (Complete only if the offeror represented itself as a small business concern in paragraph (b)(1) of this provision.) The offeror represents, as part of its offer, that--

(i) It ( ) is, ( ) is not a HUBZone small business concern listed, on the date of this representation, on the List of Qualified HUBZone Small Business Concerns maintained by the Small Business Administration, and no material change in ownership and control, principal office, or HUBZone employee percentage has occurred since it was certified by the Small Business Administration in accordance with 13 CFR part 126; and

(ii) It ( ) is, ( ) is not a joint venture that complies with the requirements of 13 CFR part 126, and the representation in paragraph (b)(6)(i) of this provision is accurate for the HUBZone small business concern or concerns that are participating in the joint venture. (The offeror shall enter the name or names of the HUBZone small business concern or concerns that are participating in the joint venture:_____.) Each HUBZone small business concern participating in the joint venture shall submit a separate signed copy of the HUBZone representation.

(c) Definitions. As used in this provision--

Service-disabled veteran-owned small business concern--

(1) Means a small business concern--

(i) Not less than 51 percent of which is owned by one or more service-disabled veterans or, in the case of any publicly owned business, not less than 51 percent of the stock of which is owned by one or more service-disabled veterans; and

(ii) The management and daily business operations of which are controlled by one or more service-disabled veterans or, in the case of a veteran with permanent and severe disability, the spouse or permanent caregiver of such veteran.

(2) Service-disabled veteran means a veteran, as defined in 38 U.S.C. 101(2), with a disability that is service-connected, as defined in 38 U.S.C. 101(16).

"Small business concern," means a concern, including its affiliates, that is independently owned and operated, not dominant in the field of operation in which it is bidding on Government contracts, and qualified as a small business under the criteria in 13 CFR Part 121 and the size standard in paragraph (a) of this provision.

Veteran-owned small business concern means a small business concern--

(1) Not less than 51 percent of which is owned by one or more veterans (as defined at 38 U.S.C. 101(2)) or, in the case of any publicly owned business, not less than 51 percent of the stock of which is owned by one or more veterans; and

(2) The management and daily business operations of which are controlled by one or more veterans.

"Women-owned small business concern," means a small business concern --

(1) That is at least 51 percent owned by one or more women; in the case of any publicly owned business, at least 51 percent of the stock of which is owned by one or more women; and

(2) Whose management and daily business operations are controlled by one or more women.

(d) Notice.

(1) If this solicitation is for supplies and has been set aside, in whole or in part, for small business concerns, then the clause in this solicitation providing notice of the set-aside contains restrictions on the source of the end items to be furnished.

(2) Under 15 U.S.C. 645(d), any person who misrepresents a firm's status as a small, HUBZone small, small disadvantaged, or women-owned small business concern in order to obtain a contract to be awarded under the preference programs established pursuant to section 8(a), 8(d), 9, or 15 of the Small Business Act or any other provision of Federal law that specifically references section 8(d) for a definition of program eligibility, shall--

(i) Be punished by imposition of fine, imprisonment, or both;

(ii) Be subject to administrative remedies, including suspension and debarment; and

(iii) Be ineligible for participation in programs conducted under the authority of the Act.

(End of provision)

52.219-1 SMALL BUSINESS PROGRAM REPRESENTATIONS (APR 2002) - ALTERNATE I (APR 2002)

(a)(1) The North American Industry Classification System (NAICS) code for this acquisition is ( ) (insert NAICS code).

(2) The small business size standard is ( ) (insert size standard).

(3) The small business size standard for a concern which submits an offer in its own name, other than on a construction or service contract, but which proposes to furnish a product which it did not itself manufacture, is 500 employees.

(b) Representations. (1) The offeror represents as part of its offer that it ( ) is, ( ) is not a small business concern.

(2) (Complete only if the offeror represented itself as a small business concern in paragraph (b)(1) of this provision.) The offeror represents, for general statistical purposes, that it ( ) is, ( ) is not a small disadvantaged business concern as defined in 13 CFR 124.1002.

(3) (Complete only if the offeror represented itself as a small business concern in paragraph (b)(1) of this provision.) The offeror represents as part of its offer that it ( ) is, ( ) is not a women-owned small business concern.

(4) (Complete only if the offeror represented itself as a small business concern in paragraph (b)(1) of this provision.) The offeror represents as part of its offer that it ( ) is, ( ) is not a veteran-owned small business concern.

(5) (Complete only if the offeror represented itself as a veteran-owned small business concern in paragraph (b)(4) of this provision.) The offeror represents as part of its offer that it ( ) is, ( ) is not a service-disabled veteran-owned small business concern.

(6) [Complete only if the offeror represented itself as a small business concern in paragraph (b)(1) of this provision.] The offeror represents, as part of its offer, that--

(i) It ( ) is, ( ) is not a HUBZone small business concern listed, on the date of this representation, on the List of Qualified HUBZone Small Business Concerns maintained by the Small Business Administration, and no material change in ownership and control, principal office, or HUBZone employee percentage has occurred since it was certified by the Small Business Administration in accordance with 13 CFR part 126; and

(ii) It ( ) is, ( ) is not a joint venture that complies with the requirements of 13 CFR part 126, and the representation in paragraph (b)(6)(i) of this provision is accurate for the HUBZone small business concern or concerns that are participating in the joint venture. (The offeror shall enter the name or names of the HUBZone small business concern or concerns that are participating in the joint venture:_____.) Each HUBZone small business concern participating in the joint venture shall submit a separate signed copy of the HUBZone representation.

(7) (Complete if offeror represented itself as disadvantaged in paragraph (b)(2) of this provision.) The offeror shall check the category in which its ownership falls:

____ Black American.

____ Hispanic American.

____ Native American (American Indians, Eskimos, Aleuts, or Native Hawaiians).

____ Asian-Pacific American (persons with origins from Burma, Thailand, Malaysia, Indonesia, Singapore, Brunei, Japan, China, Taiwan, Laos, Cambodia (Kampuchea), Vietnam, Korea, The Philippines, U.S. Trust Territory of the Pacific Islands (Republic of Palau), Republic of the Marshall Islands, Federated States of Micronesia, the Commonwealth of the Northern Mariana Islands, Guam, Samoa, Macao, Hong Kong, Fiji, Tonga, Kiribati, Tuvalu, or Nauru).

____ Subcontinent Asian (Asian-Indian) American (persons with origins from India, Pakistan, Bangladesh, Sri Lanka, Bhutan, the Maldives Islands, or Nepal).

____ Individual/concern, other than one of the preceding.

(c) Definitions. As used in this provision--

Service-disabled veteran-owned small business concern--

(1) Means a small business concern--

(i) Not less than 51 percent of which is owned by one or more service-disabled veterans or, in the case of any publicly owned business, not less than 51 percent of the stock of which is owned by one or more service-disabled veterans; and

(ii) The management and daily business operations of which are controlled by one or more service-disabled veterans or, in the case of a veteran with permanent and severe disability, the spouse or permanent caregiver of such veteran.

(2) Service-disabled veteran means a veteran, as defined in 38 U.S.C. 101(2), with a disability that is service-connected, as defined in 38 U.S.C. 101(16).

"Small business concern," means a concern, including its affiliates, that is independently owned and operated, not dominant in the field of operation in which it is bidding on Government contracts, and qualified as a small business under the criteria in 13 CFR Part 121 and the size standard in paragraph (a) of this provision.

Veteran-owned small business concern means a small business concern--

(1) Not less than 51 percent of which is owned by one or more veterans (as defined at 38 U.S.C. 101(2)) or, in the case of any publicly owned business, not less than 51 percent of the stock of which is owned by one or more veterans; and

(2) The management and daily business operations of which are controlled by one or more veterans.

"Women-owned small business concern," means a small business concern --

(1) That is at least 51 percent owned by one or more women or, in the case of any publicly owned business, at least 51 percent of the stock of which is owned by one or more women; or

(2) Whose management and daily business operations are controlled by one or more women.

(d) Notice.

(1) If this solicitation is for supplies and has been set aside, in whole or in part, for small business concerns, then the clause in this solicitation providing notice of the set-aside contains restrictions on the source of the end items to be furnished.

(2) Under 15 U.S.C. 645(d), any person who misrepresents a firm's status as a small, HUBZone small, small disadvantaged, or women-owned small business concern in order to obtain a contract to be awarded under the preference programs established pursuant to section 8(a), 8(d), 9, or 15 of the Small Business Act or any other provision of Federal law that specifically references section 8(d) for a definition of program eligibility, shall--

(i) Be punished by imposition of fine, imprisonment, or both;

(ii) Be subject to administrative remedies, including suspension and debarment; and

(iii) Be ineligible for participation in programs conducted under the authority of the Act.

(End of provision)

52.219-19 SMALL BUSINESS CONCERN REPRESENTATION FOR THE SMALL BUSINESS COMPETITIVENESS DEMONSTRATION PROGRAM (OCT 2000)

(a) Definition.

"Emerging small business" as used in this solicitation, means a small business concern whose size is no greater than 50 percent of the numerical size standard applicable to the North American Industry Classification System (NAICS) code assigned to a contracting opportunity.

(b) [Complete only if the Offeror has represented itself under the provision at 52.219-1 as a small business concern under the size standards of this solicitation.] The Offeror [ ] is, [ ] is not an emerging small business.

(c) (Complete only if the Offeror is a small business or an emerging small business, indicating its size range.)

Offeror's number of employees for the past 12 months (check this column if size standard stated in solicitation is expressed in terms of number of employees) or Offeror's average annual gross revenue for the last 3 fiscal years (check this column if size standard stated in solicitation is expressed in terms of annual receipts). (Check one of the following.)

No. of Employees	Avg. Annual Gross Revenues
____ 50 or fewer	____ $1 million or less
____ 51 - 100	____ $1,000,001 - $2 million
____ 101 - 250	____ $2,000,001 - $3.5 million
____ 251 - 500	____ $3,500,001 - $5 million
____ 501 - 750	____ $5,000,001 - $10 million
____ 751 - 1,000	____ $10,000,001 - $17 million
____ Over 1,000	____ Over $17 million

(End of provision)

52.222-21 PROHIBITION OF SEGREGATED FACILITIES (FEB 1999)

(a) Segregated facilities, as used in this clause, means any waiting rooms, work areas, rest rooms and wash rooms, restaurants and other eating areas, time clocks, locker rooms and other storage or dressing areas, parking lots, drinking fountains, recreation or entertainment areas, transportation, and housing facilities provided for employees, that are segregated by explicit directive or are in fact segregated on the basis of race, color, religion, sex, or national origin because of written or oral policies or employee custom. The term does not include separate or single-user rest rooms or necessary dressing or sleeping areas provided to assure privacy between the sexes.

(b) The Contractor agrees that it does not and will not maintain or provide for its employees any segregated facilities at any of its establishments, and that it does not and will not permit its employees to perform their services at any location under its control where segregated facilities are maintained. The Contractor agrees that a breach of this clause is a violation of the Equal Opportunity clause in this contract.

(c) The Contractor shall include this clause in every subcontract and purchase order that is subject to the Equal Opportunity clause of this contract.

(End of clause)

52.222-22 PREVIOUS CONTRACTS AND COMPLIANCE REPORTS (FEB 1999)

The offeror represents that --

(a) ( ) It has, ( ) has not participated in a previous contract or subcontract subject to the Equal Opportunity clause of this solicitation;

(b) ( ) It has, ( ) has not, filed all required compliance reports; and

(c) Representations indicating submission of required compliance reports, signed by proposed subcontractors, will be obtained before subcontract awards.

(End of provision)

52.222-25 AFFIRMATIVE ACTION COMPLIANCE (APR 1984)

The offeror represents that

(a) [ ] it has developed and has on file, [ ] has not developed and does not have on file, at each establishment, affirmative action programs required by the rules and regulations of the Secretary of Labor (41 CFR 60-1 and 60-2), or

(b) [ ] has not previously had contracts subject to the written affirmative action programs requirement of the rules and regulations of the Secretary of Labor.

(End of provision)

52.223-13 CERTIFICATION OF TOXIC CHEMICAL RELEASE REPORTING (OCT 2000)

(a) Submission of this certification is a prerequisite for making or entering into this contract imposed by Executive Order 12969, August 8, 1995.

(b) By signing this offer, the offeror certifies that--

(1) As the owner or operator of facilities that will be used in the performance of this contract that are subject to the filing and reporting requirements described in section 313 of the Emergency Planning and Community Right-to-Know Act of 1986 (EPCRA) (42 U.S.C. 11023) and section 6607 of the Pollution Prevention Act of 1990 (PPA) (42 U.S.C. 13106), the offeror will file and continue to file for such facilities for the life of the contract the Toxic Chemical Release Inventory Form (Form R) as described in sections 313(a) and (g) of EPCRA and section 6607 of PPA; or

(2) None of its owned or operated facilities to be used in the performance of this contract is subject to the Form R filing and reporting requirements because each such facility is exempt for at least one of the following reasons: (Check each block that is applicable.)

( ) (i) The facility does not manufacture, process or otherwise use any toxic chemicals listed under section 313(c) of EPCRA, 42 U.S.C. 11023(c);

( ) (ii) The facility does not have 10 or more full-time employees as specified in section 313.(b)(1)(A) of EPCRA 42 U.S.C. 11023(b)(1)(A);

( ) (iii) The facility does not meet the reporting thresholds of toxic chemicals established under section 313(f) of EPCRA, 42 U.S.C. 11023(f) (including the alternate thresholds at 40 CFR 372.27, provided an appropriate certification form has been filed with EPA);

( ) (iv) The facility does not fall within Standard Industrial Classification Code (SIC) major groups 20 through 39 or their corresponding North American Industry Classification System (NAICS) sectors 31 through 33; or

( ) (v) The facility is not located within any State of the United States, the District of Columbia, the Commonwealth of Puerto Rico, Guam, American Samoa, the United States Virgin Islands, the Northern Mariana Islands, or any other territory or possession over which the United States has jurisdiction.

(End of clause)

252.209-7001 DISCLOSURE OF OWNERSHIP OR CONTROL BY THE GOVERNMENT OF A TERRORIST COUNTRY (MAR 1998)

(a) "Definitions."

As used in this provision --

(a) "Government of a terrorist country" includes the state and the government of a terrorist country, as well as any political subdivision, agency, or instrumentality thereof.

(2) "Terrorist country" means a country determined by the Secretary of State, under section 6(j)(1)(A) of the Export Administration Act of 1979 (50 U.S.C. App. 2405(j)(i)(A)), to be a country the government of which has repeatedly provided support for such acts of international terrorism. As of the date of this provision, terrorist countries include: Cuba, Iran, Iraq, Libya, North Korea, Sudan, and Syria.

(3) "Significant interest" means --

(i) Ownership of or beneficial interest in 5 percent or more of the firm's or subsidiary's securities. Beneficial interest includes holding 5 percent or more of any class of the firm's securities in "nominee shares," "street names," or some other method of holding securities that does not disclose the beneficial owner;

(ii) Holding a management position in the firm, such as a director or officer;

(iii) Ability to control or influence the election, appointment, or tenure of directors or officers in the firm;

(iv) Ownership of 10 percent or more of the assets of a firm such as equipment, buildings, real estate, or other tangible assets of the firm; or

(v) Holding 50 percent or more of the indebtness of a firm.

(b) "Prohibition on award."

In accordance with 10 U.S.C. 2327, no contract may be awarded to a firm or a subsidiary of a firm if the government of a terrorist country has a significant interest in the firm or subsidiary or, in the case of a subsidiary, the firm that owns the subsidiary, unless a waiver is granted by the Secretary of Defense.

(c) "Disclosure."

If the government of a terrorist country has a significant interest in the Offeror or a subsidiary of the Offeror, the Offeror shall disclosure such interest in an attachment to its offer. If the Offeror is a subsidiary, it shall also disclose any significant interest the government of a terrorist country has in any firm that owns or controls the subsidiary. The disclosure shall include --

(1) Identification of each government holding a significant interest; and

(2) A description of the significant interest held by each government.

(End of provision)

252.247-7022 REPRESENTATION OF EXTENT OF TRANSPORTATION BY SEA (AUG 1992)

(a) The Offeror shall indicate by checking the appropriate blank in paragraph (b) of this provision whether transportation of supplies by sea is anticipated under the resultant contract. The term supplies is defined in the Transportation of Supplies by Sea clause of this solicitation.

(b) Representation. The Offeror represents that it:

____ (1) Does anticipate that supplies will be transported by sea in the performance of any contract or subcontract resulting from this solicitation.

____ (2) Does not anticipate that supplies will be transported by sea in the performance of any contract or subcontract resulting from this solicitation.

(c) Any contract resulting from this solicitation will include the Transportation of Supplies by Sea clause. If the Offeror represents that it will not use ocean transportation, the resulting contract will also include the Defense FAR Supplement clause at 252.247-7024, Notification of Transportation of Supplies by Sea.

(End of provision)

Section 00700 - Contract Clauses

CLAUSES INCORPORATED BY REFERENCE

52.245-2	GOVERNMENT PROPERTY (FIXED-PRICE CONTRACTS) ALTERNATE I (DEVIATION)	OCT 2002

CLAUSES INCORPORATED BY FULL TEXT

52.202-1 DEFINITIONS (DEC 2001)

(a) Agency head or head of the agency means the Secretary (Attorney General, Administrator, Governor, Chairperson, or other chief official, as appropriate) of the agency, unless otherwise indicated, including any deputy or assistant chief official of the executive agency.

(b) Commercial component means any component that is a commercial item.

(c) Commercial item means--

(1) Any item, other than real property, that is of a type customarily used by the general public or by non-governmental entities for purposes other than governmental purposes, and that--

(i) Has been sold, leased, or licensed to the general public; or

(ii) Has been offered for sale, lease, or license to the general public;

(2) Any item that evolved from an item described in paragraph (c)(1) of this clause through advances in technology or performance and that is not yet available in the commercial marketplace, but will be available in the commercial marketplace in time to satisfy the delivery requirements under a Government solicitation;

(3) Any item that would satisfy a criterion expressed in paragraphs (c)(1) or (c)(2) of this clause, but for--

(i) Modifications of a type customarily available in the commercial marketplace; or

(ii) Minor modifications of a type not customarily available in the commercial marketplace made to meet Federal Government requirements. “Minor” modifications means modifications that do not significantly alter the nongovernmental function or essential physical characteristics of an item or component, or change the purpose of a process. Factors to be considered in determining whether a modification is minor include the value and size of the modification and the comparative value and size of the final product. Dollar values and percentages may be used as guideposts, but are not conclusive evidence that a modification is minor;

(4) Any combination of items meeting the requirements of paragraphs (c)(1), (2), (3), or (5) of this clause that are of a type customarily combined and sold in combination to the general public;

(5) Installation services, maintenance services, repair services, training services, and other services if--

(i) Such services are procured for support of an item referred to in paragraph (c)(1), (2), (3), or (4) of this definition, regardless of whether such services are provided by the same source or at the same time as the item; and

(ii) The source of such services provides similar services contemporaneously to the general public under terms and conditions similar to those offered to the Federal Government;

(6) Services of a type offered and sold competitively in substantial quantities in the commercial marketplace based on established catalog or market prices for specific tasks performed under standard commercial terms and conditions. This does not include services that are sold based on hourly rates without an established catalog or market price for a specific service performed. For purposes of these services--

(i) Catalog price means a price included in a catalog, price list, schedule, or other form that is regularly maintained by the manufacturer or vendor, is either published or otherwise available for inspection by customers, and states prices at which sales are currently, or were last, made to a significant number of buyers constituting the general public; and

(ii) Market prices means current prices that are established in the course of ordinary trade between buyers and sellers free to bargain and that can be substantiated through competition or from sources independent of the offerors.

(7) Any item, combination of items, or service referred to in subparagraphs (c)(1) through (c)(6), notwithstanding the fact that the item, combination of items, or service is transferred between or among separate divisions, subsidiaries, or affiliates of a Contractor; or

(8) A nondevelopmental item, if the procuring agency determines the item was developed exclusively at private expense and sold in substantial quantities, on a competitive basis, to multiple State and local Governments.

(d) Component means any item supplied to the Government as part of an end item or of another component, except that for use in 52.225-9, and 52.225-11 see the definitions in 52.225-9(a) and 52.225-11(a).

(e) Contracting Officer means a person with the authority to enter into, administer, and/or terminate contracts and make related determinations and findings. The term includes certain authorized representatives of the Contracting Officer acting within the limits of their authority as delegated by the Contracting Officer.

(f) Nondevelopmental item means--

(1) Any previously developed item of supply used exclusively for governmental purposes by a Federal agency, a State or local government, or a foreign government with which the United States has a mutual defense cooperation agreement;

(2) Any item described in paragraph (f)(1) of this definition that requires only minor modification or modifications of a type customarily available in the commercial marketplace in order to meet the requirements of the procuring department or agency; or

(3) Any item of supply being produced that does not meet the requirements of paragraph (f)(1) or (f)(2) solely because the item is not yet in use.

(g) "Contracting Officer" means a person with the authority to enter into, administer, and/or terminate contracts and make related determinations and findings. The term includes certain authorized representatives of the Contracting Officer acting within the limits of their authority as delegated by the Contracting Officer.

(h) Except as otherwise provided in this contract, the term "subcontracts" includes, but is not limited to, purchase orders and changes and modifications to purchase orders under this contract.

(End of clause)

52.203-3 GRATUITIES (APR 1984)

(a) The right of the Contractor to proceed may be terminated by written notice if, after notice and hearing, the agency head or a designee determines that the Contractor, its agent, or another representative--

(1) Offered or gave a gratuity (e.g., an entertainment or gift) to an officer, official, or employee of the Government; and

(2) Intended, by the gratuity, to obtain a contract or favorable treatment under a contract.

(b) The facts supporting this determination may be reviewed by any court having lawful jurisdiction.

(c) If this contract is terminated under paragraph (a) of this clause, the Government is entitled--

(1) To pursue the same remedies as in a breach of the contract; and

(2) In addition to any other damages provided by law, to exemplary damages of not less than 3 nor more than 10 times the cost incurred by the Contractor in giving gratuities to the person concerned, as determined by the agency head or a designee. (This subparagraph (c)(2) is applicable only if this contract uses money appropriated to the Department of Defense.)

(d) The rights and remedies of the Government provided in this clause shall not be exclusive and are in addition to any other rights and remedies provided by law or under this contract.

(End of clause)

52.203-5 COVENANT AGAINST CONTINGENT FEES (APR 1984)

(a) The Contractor warrants that no person or agency has been employed or retained to solicit or obtain this contract upon an agreement or understanding for a contingent fee, except a bona fide employee or agency. For breach or violation of this warranty, the Government shall have the right to annul this contract without liability or, in its discretion, to deduct from the contract price or consideration, or otherwise recover, the full amount of the contingent fee.

(b) "Bona fide agency," as used in this clause, means an established commercial or selling agency, maintained by a contractor for the purpose of securing business, that neither exerts nor proposes to exert improper influence to solicit or obtain Government contracts nor holds itself out as being able to obtain any Government contract or contracts through improper influence.

"Bona fide employee," as used in this clause, means a person, employed by a contractor and subject to the contractor's supervision and control as to time, place, and manner of performance, who neither exerts nor proposes to exert improper influence to solicit or obtain Government contracts nor holds out as being able to obtain any Government contract or contracts through improper influence.

"Contingent fee," as used in this clause, means any commission, percentage, brokerage, or other fee that is contingent upon the success that a person or concern has in securing a Government contract.

"Improper influence," as used in this clause, means any influence that induces or tends to induce a Government employee or officer to give consideration or to act regarding a Government contract on any basis other than the merits of the matter.

(End of clause)

52.203-7 ANTI-KICKBACK PROCEDURES. (JUL 1995)

(a) Definitions.

"Kickback," as used in this clause, means any money, fee, commission, credit, gift, gratuity, thing of value, or compensation of any kind which is provided, directly or indirectly, to any prime Contractor, prime Contractor employee, subcontractor, or subcontractor employee for the purpose of improperly obtaining or rewarding favorable treatment in connection with a prime contract or in connection with a subcontract relating to a prime contract.

"Person," as used in this clause, means a corporation, partnership, business association of any kind, trust, joint-stock company, or individual.

"Prime contract," as used in this clause, means a contract or contractual action entered into by the United States for the purpose of obtaining supplies, materials, equipment, or services of any kind.

"Prime Contractor," as used in this clause, means a person who has entered into a prime contract with the United States.

"Prime Contractor employee," as used in this clause, means any officer, partner, employee, or agent of a prime Contractor.

"Subcontract," as used in this clause, means a contract or contractual action entered into by a prime Contractor or subcontractor for the purpose of obtaining supplies, materials, equipment, or services of any kind under a prime contract.

"Subcontractor," as used in this clause, (1) means any person, other than the prime Contractor, who offers to furnish or furnishes any supplies, materials, equipment, or services of any kind under a prime contract or a subcontract entered into in connection with such prime contract, and (2) includes any person who offers to furnish or furnishes general supplies to the prime Contractor or a higher tier subcontractor.

"Subcontractor employee," as used in this clause, means any officer, partner, employee, or agent of a subcontractor.

(b) The Anti-Kickback Act of 1986 (41 U.S.C. 51-58) (the Act), prohibits any person from -

(1) Providing or attempting to provide or offering to provide any kickback;

(2) Soliciting, accepting, or attempting to accept any kickback; or

(3) Including, directly or indirectly, the amount of any kickback in the contract price charged by a prime Contractor to the United States or in the contract price charged by a subcontractor to a prime Contractor or higher tier subcontractor.

(c)(1) The Contractor shall have in place and follow reasonable procedures designed to prevent and detect possible violations described in paragraph (b) of this clause in its own operations and direct business relationships.

(2) When the Contractor has reasonable grounds to believe that a violation described in paragraph (b) of this clause may have occurred, the Contractor shall promptly report in writing the possible violation. Such reports shall be made to the inspector general of the contracting agency, the head of the contracting agency if the agency does not have an inspector general, or the Department of Justice.

(3) The Contractor shall cooperate fully with any Federal agency investigating a possible violation described in paragraph (b) of this clause.

(4) The Contracting Officer may (i) offset the amount of the kickback against any monies owed by the United States under the prime contract and/or (ii) direct that the Prime Contractor withhold, from sums owed a subcontractor under

the prime contract, the amount of any kickback. The Contracting Officer may order the monies withheld under subdivision (c)(4)(ii) of this clause be paid over to the Government unless the Government has already offset those monies under subdivision (c)(4)(i) of this clause. In either case, the Prime Contractor shall notify the Contracting Officer when the monies are withheld.

(5) The Contractor agrees to incorporate the substance of this clause, including this subparagraph (c)(5) but excepting subparagraph (c)(1), in all subcontracts under this contract which exceed $100,000.

52.203-8 CANCELLATION, RESCISSION, AND RECOVERY OF FUNDS FOR ILLEGAL OR IMPROPER ACTIVITY (JAN 1997)

(a) If the Government receives information that a contractor or a person has engaged in conduct constituting a violation of subsection (a), (b), (c), or (d) of Section 27 of the Office of Federal Procurement Policy Act (41 U.S.C. 423) (the Act), as amended by section 4304 of the 1996 National Defense Authorization Act for Fiscal Year 1996 (Pub. L. 104-106), the Government may--

(1) Cancel the solicitation, if the contract has not yet been awarded or issued; or

(2) Rescind the contract with respect to which--

(i) The Contractor or someone acting for the Contractor has been convicted for an offense where the conduct constitutes a violation of subsection 27(a) or (b) of the Act for the purpose of either--

(A) Exchanging the information covered by such subsections for anything of value; or

(B) Obtaining or giving anyone a competitive advantage in the award of a Federal agency procurement contract; or

(ii) The head of the contracting activity has determined, based upon a preponderance of the evidence, that the Contractor or someone acting for the Contractor has engaged in conduct constituting an offense punishable under subsections 27(e)(1) of the Act.

(b) If the Government rescinds the contract under paragraph (a) of this clause, the Government is entitled to recover, in addition to any penalty prescribed by law, the amount expended under the contract.

(c) The rights and remedies of the Government specified herein are not exclusive, and are in addition to any other rights and remedies provided by law, regulation, or under this contract.

(End of clause)

52.203-10 PRICE OR FEE ADJUSTMENT FOR ILLEGAL OR IMPROPER ACTIVITY (JAN 1997)

(a) The Government, at its election, may reduce the price of a fixed-price type contract and the total cost and fee under a cost-type contract by the amount of profit or fee determined as set forth in paragraph (b) of this clause if the head of the contracting activity or designee determines that there was a violation of subsection 27 (a), (b), or (c) of the Office of Federal Procurement Policy Act, as amended (41 U.S.C. 423), as implemented in section 3.104 of the Federal Acquisition Regulation.

(b) The price or fee reduction referred to in paragraph (a) of this clause shall be--

(1) For cost-plus-fixed-fee contracts, the amount of the fee specified in the contract at the time of award;

(2) For cost-plus-incentive-fee contracts, the target fee specified in the contract at the time of award, notwithstanding any minimum fee or "fee floor" specified in the contract;

(3) For cost-plus-award-fee contracts--

(i) The base fee established in the contract at the time of contract award;

(ii) If no base fee is specified in the contract, 30 percent of the amount of each award fee otherwise payable to the Contractor for each award fee evaluation period or at each award fee determination point.

(4) For fixed-price-incentive contracts, the Government may--

(i) Reduce the contract target price and contract target profit both by an amount equal to the initial target profit specified in the contract at the time of contract award; or

(ii) If an immediate adjustment to the contract target price and contract target profit would have a significant adverse impact on the incentive price revision relationship under the contract, or adversely affect the contract financing provisions, the Contracting Officer may defer such adjustment until establishment of the total final price of the contract. The total final price established in accordance with the incentive price revision provisions of the contract shall be reduced by an amount equal to the initial target profit specified in the contract at the time of contract award and such reduced price shall be the total final contract price.

(5) For firm-fixed-price contracts, by 10 percent of the initial contract price or a profit amount determined by the Contracting Officer from records or documents in existence prior to the date of the contract award.

(c) The Government may, at its election, reduce a prime contractor's price or fee in accordance with the procedures of paragraph (b) of this clause for violations of the Act by its subcontractors by an amount not to exceed the amount of profit or fee reflected in the subcontract at the time the subcontract was first definitively priced.

(d) In addition to the remedies in paragraphs (a) and (c) of this clause, the Government may terminate this contract for default. The rights and remedies of the Government specified herein are not exclusive, and are in addition to any other rights and remedies provided by law or under this contract.

(End of clause)

52.203-12 LIMITATION ON PAYMENTS TO INFLUENCE CERTAIN FEDERAL TRANSACTIONS (JUN 1997)

(a) Definitions.

"Agency," as used in this clause, means executive agency as defined in 2.101.

"Covered Federal action," as used in this clause, means any of the following Federal actions:

(1) The awarding of any Federal contract.

(2) The making of any Federal grant.

(3) The making of any Federal loan.

(4) The entering into of any cooperative agreement.

(5) The extension, continuation, renewal, amendment, or modification of any Federal contract, grant, loan, or cooperative agreement.

"Indian tribe" and "tribal organization," as used in this clause, have the meaning provided in section 4 of the Indian Self-Determination and Education Assistance Act (25 U.S.C. 450B) and include Alaskan Natives.

"Influencing or attempting to influence," as used in this clause, means making, with the intent to influence, any communication to or appearance before an officer or employee of any agency, a Member of Congress, an officer or employee of Congress, or an employee of a Member of Congress in connection with any covered Federal action.

"Local government," as used in this clause, means a unit of government in a State and, if chartered, established, or otherwise recognized by a State for the performance of a governmental duty, including a local public authority, a special district, an intrastate district, a council of governments, a sponsor group representative organization, and any other instrumentality of a local government.

"Officer or employee of an agency," as used in this clause, includes the following individuals who are employed by an agency:

(1) An individual who is appointed to a position in the Government under Title 5, United States Code, including a position under a temporary appointment.

(2) A member of the uniformed services, as defined in subsection 101(3),Title 37, United States Code.

(3) A special Government employee, as defined in section 202, Title 18, United States Code.

(4) An individual who is a member of a Federal advisory committee, as defined by the Federal Advisory Committee Act, Title 5, United States Code, appendix 2.

"Person," as used in this clause, means an individual, corporation, company, association, authority, firm, partnership, society, State, and local government, regardless of whether such entity is operated for profit, or not for profit. This term excludes an Indian tribe, tribal organization, or any other Indian organization with respect to expenditures specifically permitted by other Federal law.

"Reasonable compensation," as used in this clause, means, with respect to a regularly employed officer or employee of any person, compensation that is consistent with the normal compensation for such officer or employee for work that is not furnished to, not funded by, or not furnished in cooperation with the Federal Government.

"Reasonable payment," as used in this clause, means, with respect to professional and other technical services, a payment in an amount that is consistent with the amount normally paid for such services in the private sector.

"Recipient," as used in this clause, includes the Contractor and all subcontractors. This term excludes an Indian tribe, tribal organization, or any other Indian organization with respect to expenditures specifically permitted by other Federal law.

"Regularly employed," as used in this clause, means, with respect to an officer or employee of a person requesting or receiving a Federal contract, an officer or employee who is employed by such person for at least 130 working days within 1 year immediately preceding the date of the submission that initiates agency consideration of such person for receipt of such contract. An officer or employee who is employed by such person for less than 130 working days within 1 year immediately preceding the date of the submission that initiates agency consideration of such person shall be considered to be regularly employed as soon as he or she is employed by such person for 130 working days.

"State," as used in this clause, means a State of the United States, the District of Columbia, the Commonwealth of Puerto Rico, a territory or possession of the United States, an agency or instrumentality of a State, and multi-State, regional, or interstate entity having governmental duties and powers.

(b) Prohibitions.

(1) Section 1352 of Title 31, United States Code, among other things, prohibits a recipient of a Federal contract, grant, loan, or cooperative agreement from using appropriated funds to pay any person for influencing or attempting to influence an officer or employee of any agency, a Member of Congress, an officer or employee of Congress, or an employee of a Member of Congress in connection with any of the following covered Federal actions: the awarding of any Federal contract; the making of any Federal grant; the making of any Federal loan; the entering into of any cooperative agreement; or the modification of any Federal contract, grant, loan, or cooperative agreement.

(2) The Act also requires Contractors to furnish a disclosure if any funds other than Federal appropriated funds (including profit or fee received under a covered Federal transaction) have been paid, or will be paid, to any person for influencing or attempting to influence an officer or employee of any agency, a Member of Congress, an officer or employee of Congress, or an employee of a Member of Congress in connection with a Federal contract, grant, loan, or cooperative agreement.

(3) The prohibitions of the Act do not apply under the following conditions:

(i) Agency and legislative liaison by own employees.

(A) The prohibition on the use of appropriated funds, in subparagraph (b)(1) of this clause, does not apply in the case of a payment of reasonable compensation made to an officer or employee of a person requesting or receiving a covered Federal action if the payment is for agency and legislative liaison activities not directly related to a covered Federal action.

(B) For purposes of subdivision (b)(3)(i)(A) of this clause, providing any information specifically requested by an agency or Congress is permitted at any time.

(C) The following agency and legislative liaison activities are permitted at any time where they are not related to a specific solicitation for any covered Federal action:

(1) Discussing with an agency the qualities and characteristics (including individual demonstrations) of the person's products or services, conditions or terms of sale, and service capabilities.

(2) Technical discussions and other activities regarding the application or adaptation of the person's products or services for an agency's use.

(D) The following agency and legislative liaison activities are permitted where they are prior to formal solicitation of any covered Federal action--

(1) Providing any information not specifically requested but necessary for an agency to make an informed decision about initiation of a covered Federal action;

(2) Technical discussions regarding the preparation of an unsolicited proposal prior to its official submission; and

(3) Capability presentations by persons seeking awards from an agency pursuant to the provisions of the Small Business Act, as amended by Pub. L. 95-507, and subsequent amendments.

(E) Only those services expressly authorized by subdivision (b)(3)(i)(A) of this clause are permitted under this clause.

(ii) Professional and technical services.

(A) The prohibition on the use of appropriated funds, in subparagraph (b)(1) of this clause, does not apply in the case of--

(1) A payment of reasonable compensation made to an officer or employee of a person requesting or receiving a covered Federal action or an extension, continuation, renewal, amendment, or modification of a covered Federal action, if payment is for professional or technical services rendered directly in the preparation, submission, or negotiation of any bid, proposal, or application for that Federal action or for meeting requirements imposed by or pursuant to law as a condition for receiving that Federal action.

(2) Any reasonable payment to a person, other than an officer or employee of a person requesting or receiving a covered Federal action or an extension, continuation, renewal, amendment, or modification of a covered Federal action if the payment is for professional or technical services rendered directly in the preparation, submission, or negotiation of any bid, proposal, or application for that Federal action or for meeting requirements imposed by or pursuant to law as a condition for receiving that Federal action. Persons other than officers or employees of a person requesting or receiving a covered Federal action include consultants and trade associations.

(B) For purposes of subdivision (b)(3)(ii)(A) of this clause, "professional and technical services" shall be limited to advice and analysis directly applying any professional or technical discipline. For example, drafting of a legal document accompanying a bid or proposal by a lawyer is allowable. Similarly, technical advice provided by an engineer on the performance or operational capability of a piece of equipment rendered directly in the negotiation of a contract is allowable. However, communications with the intent to influence made by a professional (such as a licensed lawyer) or a technical person (such as a licensed accountant) are not allowable under this section unless they provide advice and analysis directly applying their professional or technical expertise and unless the advice or analysis is rendered directly and solely in the preparation, submission or negotiation of a covered Federal action. Thus, for example, communications with the intent to influence made by a lawyer that do not provide legal advice or analysis directly and solely related to the legal aspects of his or her client's proposal, but generally advocate one proposal over another are not allowable under this section because the lawyer is not providing professional legal services. Similarly, communications with the intent to influence made by an engineer providing an engineering analysis prior to the preparation or submission of a bid or proposal are not allowable under this section since the engineer is providing technical services but not directly in the preparation, submission or negotiation of a covered Federal action.

(C) Requirements imposed by or pursuant to law as a condition for receiving a covered Federal award include those required by law or regulation and any other requirements in the actual award documents.

(D) Only those services expressly authorized by subdivisions (b)(3)(ii)(A)(1) and (2) of this clause are permitted under this clause.

(E) The reporting requirements of FAR 3.803(a) shall not apply with respect to payments of reasonable compensation made to regularly employed officers or employees of a person.

(c) Disclosure.

(1) The Contractor who requests or receives from an agency a Federal contract shall file with that agency a disclosure form, OMB standard form LLL, Disclosure of Lobbying Activities, if such person has made or has agreed to make any payment using nonappropriated funds (to include profits from any covered Federal action), which would be prohibited under subparagraph (b)(1) of this clause, if paid for with appropriated funds.

(2) The Contractor shall file a disclosure form at the end of each calendar quarter in which there occurs any event that materially affects the accuracy of the information contained in any disclosure form previously filed by such person under subparagraph (c)(1) of this clause. An event that materially affects the accuracy of the information reported includes--

(i) A cumulative increase of $25,000 or more in the amount paid or expected to be paid for influencing or attempting to influence a covered Federal action; or

(ii) A change in the person(s) or individual(s) influencing or attempting to influence a covered Federal action; or

(iii) A change in the officer(s), employee(s), or Member(s) contacted to influence or attempt to influence a covered Federal action.

(3) The Contractor shall require the submittal of a certification, and if required, a disclosure form by any person who requests or receives any subcontract exceeding $100,000 under the Federal contract.

(4) All subcontractor disclosure forms (but not certifications) shall be forwarded from tier to tier until received by the prime Contractor. The prime Contractor shall submit all disclosures to the Contracting Officer at the end of the calendar quarter in which the disclosure form is submitted by the subcontractor. Each subcontractor certification shall be retained in the subcontract file of the awarding Contractor.

(d) Agreement. The Contractor agrees not to make any payment prohibited by this clause.

(e) Penalties.

(1) Any person who makes an expenditure prohibited under paragraph (a) of this clause or who fails to file or amend the disclosure form to be filed or amended by paragraph (b) of this clause shall be subject to civil penalties as provided for by 31 U.S.C. 1352. An imposition of a civil penalty does not prevent the Government from seeking any other remedy that may be applicable.

(2) Contractors may rely without liability on the representation made by their subcontractors in the certification and disclosure form.

(f) Cost allowability. Nothing in this clause makes allowable or reasonable any costs which would otherwise be unallowable or unreasonable. Conversely, costs made specifically unallowable by the requirements in this clause will not be made allowable under any other provision.

(End of clause)

52.204-4 PRINTED OR COPIED DOUBLE-SIDED ON RECYCLED PAPER (AUG 2000)

(a) Definitions. As used in this clause--

“Postconsumer material” means a material or finished product that has served its intended use and has been discarded for disposal or recovery, having completed its life as a consumer item. Postconsumer material is a part of the broader category of “recovered material.” For paper and paper products, postconsumer material means “postconsumer fiber” defined by the U.S. Environmental Protection Agency (EPA) as--

(1) Paper, paperboard, and fibrous materials from retail stores, office buildings, homes, and so forth, after they have passed through their end-usage as a consumer item, including: used corrugated boxes; old newspapers; old magazines; mixed waste paper; tabulating cards; and used cordage; or

(2) All paper, paperboard, and fibrous materials that enter and are collected from municipal solid waste; but not

(3) Fiber derived from printers' over-runs, converters' scrap, and over-issue publications.

“Printed or copied double-sided” means printing or reproducing a document so that information is on both sides of a sheet of paper.

“Recovered material,” for paper and paper products, is defined by EPA in its Comprehensive Procurement Guideline as “recovered fiber” and means the following materials:

(1) Postconsumer fiber; and

(2) Manufacturing wastes such as--

(i) Dry paper and paperboard waste generated after completion of the papermaking process (that is, those manufacturing operations up to and including the cutting and trimming of the paper machine reel into smaller rolls or rough sheets) including: envelope cuttings, bindery trimmings, and other paper and paperboard waste resulting from printing, cutting, forming, and other converting operations; bag, box, and carton manufacturing wastes; and butt rolls, mill wrappers, and rejected unused stock; and

(ii) Repulped finished paper and paperboard from obsolete inventories of paper and paperboard manufacturers, merchants, wholesalers, dealers, printers, converters, or others.

(b) In accordance with Section 101 of Executive Order 13101 of September 14, 1998, Greening the Government through Waste Prevention, Recycling, and Federal Acquisition, the Contractor is encouraged to submit paper documents, such as offers, letters, or reports, that are printed or copied double-sided on recycled paper that meet minimum content standards specified in Section 505 of Executive Order 13101, when not using electronic commerce methods to submit information or data to the Government.

(c) If the Contractor cannot purchase high-speed copier paper, offset paper, forms bond, computer printout paper, carbonless paper, file folders, white wove envelopes, writing and office paper, book paper, cotton fiber paper, and cover stock meeting the 30 percent postconsumer material standard for use in submitting paper documents to the Government, it should use paper containing no less than 20 percent postconsumer material. This lesser standard should be used only when paper meeting the 30 percent postconsumer material standard is not obtainable at a reasonable price or does not meet reasonable performance standards.

(End of clause)

52.204-6 DATA UNIVERSAL NUMBERING SYSTEM (DUNS) NUMBER (JUN 99)

(a) The offeror shall enter, in the block with its name and address on the cover page of its offer, the annotation “DUNS” followed by the DUNS number that identifies the offeror’s name and address exactly as stated in the offer.

(b) If the offeror does not have a DUNS number, it should contact Dun and Bradstreet directly to obtain one. A DUNS number will be provided immediately by telephone at no charge to the offeror. For information on obtaining a DUNS number, the offeror, if located within the United States, should call Dun and Bradstreet at 1-800-333-0505. The offeror should be prepared to provide the following information:

(1) Company name.

(2) Company address.

(3) Company telephone number.

(4) Line of business.

(5) Chief executive officer/key manager.

(6) Date the company was started.

(7) Number of people employed by the company.

(8) Company affiliation.

(c) Offerors located outside the United States may obtain the location and phone number of the local Dun and Bradstreet Information Services office from the Internet Home Page at http://www.customerservice@dnb.com. If an offeror is unable to locate a local service center, it may send an e-mail to Dun and Bradstreet at globalinfo@mail.dnb.com.

(End of provision)

52.211-18 VARIATION IN ESTIMATED QUANTITY (APR 1984)

If the quantity of a unit-priced item in this contract is an estimated quantity and the actual quantity of the unit-priced item varies more than 15 percent above or below the estimated quantity, an equitable adjustment in the contract price shall be made upon demand of either party. The equitable adjustment shall be based upon any increase or decrease in costs due solely to the variation above 115 percent or below 85 percent of the estimated quantity. If the quantity variation is such as to cause an increase in the time necessary for completion, the Contractor may request, in writing, an extension of time, to be received by the Contracting Officer within 10 days from the beginning of the delay, or within such further period as may be granted by the Contracting Officer before the date of final settlement of the contract. Upon the receipt of a written request for an extension, the Contracting Officer shall ascertain the facts and make an adjustment for extending the completion date as, in the judgement of the Contracting Officer, is justified.

52.215-2 AUDIT AND RECORDS--NEGOTIATION (JUN 1999)

(a) As used in this clause, "records" includes books, documents, accounting procedures and practices, and other data, regardless of type and regardless of whether such items are in written form, in the form of computer data, or in any other form.

(b) Examination of costs. If this is a cost-reimbursement, incentive, time-and-materials, labor-hour, or price redeterminable contract, or any combination of these, the Contractor shall maintain and the Contracting Officer, or an authorized representative of the Contracting Officer, shall have the right to examine and audit all records and other evidence sufficient to reflect properly all costs claimed to have been incurred or anticipated to be incurred directly or indirectly in performance of this contract. This right of examination shall include inspection at all reasonable times of the Contractor's plants, or parts of them, engaged in performing the contract.

(c) Cost or pricing data. If the Contractor has been required to submit cost or pricing data in connection with any pricing action relating to this contract, the Contracting Officer, or an authorized representative of the Contracting Officer, in order to evaluate the accuracy, completeness, and currency of the cost or pricing data, shall have the right to examine and audit all of the Contractor's records, including computations and projections, related to--

(1) The proposal for the contract, subcontract, or modification;

(2) The discussions conducted on the proposal(s), including those related to negotiating;

(3) Pricing of the contract, subcontract, or modification; or

(4) Performance of the contract, subcontract or modification.

(d) Comptroller General--(1) The Comptroller General of the United States, or an authorized representative, shall have access to and the right to examine any of the Contractor's directly pertinent records involving transactions related to this contract or a subcontract hereunder.

(2) This paragraph may not be construed to require the Contractor or subcontractor to create or maintain any record that the Contractor or subcontractor does not maintain in the ordinary course of business or pursuant to a provision of law.

(e) Reports. If the Contractor is required to furnish cost, funding, or performance reports, the Contracting Officer or an authorized representative of the Contracting Officer shall have the right to examine and audit the supporting records and materials, for the purpose of evaluating (1) the effectiveness of the Contractor's policies and procedures to produce data compatible with the objectives of these reports and (2) the data reported.

(f) Availability. The Contractor shall make available at its office at all reasonable times the records, materials, and other evidence described in paragraphs (a), (b), (c), (d), and (e) of this clause, for examination, audit, or reproduction, until 3 years after final payment under this contract or for any shorter period specified in Subpart 4.7, Contractor Records Retention, of the Federal Acquisition Regulation (FAR), or for any longer period required by statute or by other clauses of this contract. In addition--

(1) If this contract is completely or partially terminated, the Contractor shall make available the records relating to the work terminated until 3 years after any resulting final termination settlement; and

(2) The Contractor shall make available records relating to appeals under the Disputes clause or to litigation or the settlement of claims arising under or relating to this contract until such appeals, litigation, or claims are finally resolved.

(g) The Contractor shall insert a clause containing all the terms of this clause, including this paragraph (g), in all subcontracts under this contract that exceed the simplified acquisition threshold, and--

(1) That are cost-reimbursement, incentive, time-and-materials, labor-hour, or price-redeterminable type or any combination of these;

(2) For which cost or pricing data are required; or

(3) That require the subcontractor to furnish reports as discussed in paragraph (e) of this clause.

The clause may be altered only as necessary to identify properly the contracting parties and the Contracting Officer under the Government prime contract.

(End of clause)

52.215-10 PRICE REDUCTION FOR DEFECTIVE COST OR PRICING DATA (OCT 1997)

(a) If any price, including profit or fee, negotiated in connection with this contract, or any cost reimbursable under this contract, was increased by any significant amount because--

(1) The Contractor or a subcontractor furnished cost or pricing data that were not complete, accurate, and current as certified in its Certificate of Current Cost or Pricing Data;

(2) A subcontractor or prospective subcontractor furnished the Contractor cost or pricing data that were not complete, accurate, and current as certified in the Contractor's Certificate of Current Cost or Pricing Data; or

(3) Any of these parties furnished data of any description that were not accurate, the price or cost shall be reduced accordingly and the contract shall be modified to reflect the reduction.

(b) Any reduction in the contract price under paragraph (a) of this clause due to defective data from a prospective subcontractor that was not subsequently awarded the subcontract shall be limited to the amount, plus applicable overhead and profit markup, by which--

(1) The actual subcontract; or

(2) The actual cost to the Contractor, if there was no subcontract, was less than the prospective subcontract cost estimate submitted by the Contractor; provided, that the actual subcontract price was not itself affected by defective cost or pricing data.

(c)(1) If the Contracting Officer determines under paragraph (a) of this clause that a price or cost reduction should be made, the Contractor agrees not to raise the following matters as a defense:

(i) The Contractor or subcontractor was a sole source supplier or otherwise was in a superior bargaining position and thus the price of the contract would not have been modified even if accurate, complete, and current cost or pricing data had been submitted.

(ii) The Contracting Officer should have known that the cost or pricing data in issue were defective even though the Contractor or subcontractor took no affirmative action to bring the character of the data to the attention of the Contracting Officer.

(iii) The contract was based on an agreement about the total cost of the contract and there was no agreement about the cost of each item procured under the contract.

(iv) The Contractor or subcontractor did not submit a Certificate of Current Cost or Pricing Data.

(2)(i) Except as prohibited by subdivision (c)(2)(ii) of this clause, an offset in an amount determined appropriate by the Contracting Officer based upon the facts shall be allowed against the amount of a contract price reduction if--

(A) The Contractor certifies to the Contracting Officer that, to the best of the Contractor's knowledge and belief, the Contractor is entitled to the offset in the amount requested; and

(B) The Contractor proves that the cost or pricing data were available before the “as of” date specified on its Certificate of Current Cost or Pricing Data, and that the data were not submitted before such date.

(ii) An offset shall not be allowed if--

(A) The understated data were known by the Contractor to be understated before the “as of” date specified on its Certificate of Current Cost or Pricing Data; or

(B) The Government proves that the facts demonstrate that the contract price would not have increased in the amount to be offset even if the available data had been submitted before the “as of” date specified on its Certificate of Current Cost or Pricing Data.

(d) If any reduction in the contract price under this clause reduces the price of items for which payment was made prior to the date of the modification reflecting the price reduction, the Contractor shall be liable to and shall pay the United States at the time such overpayment is repaid--

(1) Simple interest on the amount of such overpayment to be computed from the date(s) of overpayment to the Contractor to the date the Government is repaid by the Contractor at the applicable underpayment rate effective for each quarter prescribed by the Secretary of the Treasury under 26 U.S.C. 6621(a)(2); and

A penalty equal to the amount of the overpayment, if the Contractor or subcontractor knowingly submitted cost or pricing data that were incomplete, inaccurate, or noncurrent.

(End of clause)

52.215-11 PRICE REDUCTION FOR DEFECTIVE COST OR PRICING DATA--MODIFICATIONS (OCT 1997)

(a) This clause shall become operative only for any modification to this contract involving a pricing adjustment expected to exceed the threshold for submission of cost or pricing data at FAR 15.403-4, except that this clause does not apply to any modification if an exception under FAR 15.403-1 applies.

(b) If any price, including profit or fee, negotiated in connection with any modification under this clause, or any cost reimbursable under this contract, was increased by any significant amount because (1) the Contractor or a subcontractor furnished cost or pricing data that were not complete, accurate, and current as certified in its Certificate of Current Cost or Pricing Data, (2) a subcontractor or prospective subcontractor furnished the Contractor cost or pricing data that were not complete, accurate, and current as certified in the Contractor's Certificate of Current Cost or Pricing Data, or (3) any of these parties furnished data of any description that were not accurate, the price or cost shall be reduced accordingly and the contract shall be modified to reflect the reduction. This right to a price reduction is limited to that resulting from defects in data relating to modifications for which this clause becomes operative under paragraph (a) of this clause.

(c) Any reduction in the contract price under paragraph (b) of this clause due to defective data from a prospective subcontractor that was not subsequently awarded the subcontract shall be limited to the amount, plus applicable overhead and profit markup, by which--

(1) The actual subcontract; or

(2) The actual cost to the Contractor, if there was no subcontract, was less than the prospective subcontract cost estimate submitted by the Contractor; provided, that the actual subcontract price was not itself affected by defective cost or pricing data.

(d)(1) If the Contracting Officer determines under paragraph (b) of this clause that a price or cost reduction should be made, the Contractor agrees not to raise the following matters as a defense:

(i) The Contractor or subcontractor was a sole source supplier or otherwise was in a superior bargaining position and thus the price of the contract would not have been modified even if accurate, complete, and current cost or pricing data had been submitted.

(ii) The Contracting Officer should have known that the cost or pricing data in issue were defective even though the Contractor or subcontractor took no affirmative action to bring the character of the data to the attention of the Contracting Officer.

(iii) The contract was based on an agreement about the total cost of the contract and there was no agreement about the cost of each item procured under the contract.

(iv) The Contractor or subcontractor did not submit a Certificate of Current Cost or Pricing Data.

(2)(i) Except as prohibited by subdivision (d)(2)(ii) of this clause, an offset in an amount determined appropriate by the Contracting Officer based upon the facts shall be allowed against the amount of a contract price reduction if--

(A) The Contractor certifies to the Contracting Officer that, to the best of the Contractor's knowledge and belief, the Contractor is entitled to the offset in the amount requested; and

(B) The Contractor proves that the cost or pricing data were available before the “as of” date specified on its Certificate of Current Cost or Pricing Data, and that the data were not submitted before such date.

(ii) An offset shall not be allowed if--

(A) The understated data were known by the Contractor to be understated before the “as of” date specified on its Certificate of Current Cost or Pricing Data; or

(B) The Government proves that the facts demonstrate that the contract price would not have increased in the amount to be offset even if the available data had been submitted before the “as of” date specified on its Certificate of Current Cost or Pricing Data.

(e) If any reduction in the contract price under this clause reduces the price of items for which payment was made prior to the date of the modification reflecting the price reduction, the Contractor shall be liable to and shall pay the United States at the time such overpayment is repaid--

(1) Simple interest on the amount of such overpayment to be computed from the date(s) of overpayment to the Contractor to the date the Government is repaid by the Contractor at the applicable underpayment rate effective for each quarter prescribed by the Secretary of the Treasury under 26 U.S.C. 6621(a)(2); and

A penalty equal to the amount of the overpayment, if the Contractor or subcontractor knowingly submitted cost or pricing data that were incomplete, inaccurate, or noncurrent.

(End of clause)

52.215-13 SUBCONTRACTOR COST OR PRICING DATA--MODIFICATIONS (OCT 1997)

(a) The requirements of paragraphs (b) and (c) of this clause shall--

(1) Become operative only for any modification to this contract involving a pricing adjustment expected to exceed the threshold for submission of cost or pricing data at FAR 15.403-4; and

(2) Be limited to such modifications.

(b) Before awarding any subcontract expected to exceed the threshold for submission of cost or pricing data at FAR 15.403-4, on the date of agreement on price or the date of award, whichever is later; or before pricing any subcontract modification involving a pricing adjustment expected to exceed the threshold for submission of cost or pricing data at FAR 15.403-4, the Contractor shall require the subcontractor to submit cost or pricing data (actually or by specific identification in writing), unless an exception under FAR 15.403-1 applies.

(c) The Contractor shall require the subcontractor to certify in substantially the form prescribed in FAR 15.406-2 that, to the best of its knowledge and belief, the data submitted under paragraph (b) of this clause were accurate, complete, and current as of the date of agreement on the negotiated price of the subcontract or subcontract modification.

The Contractor shall insert the substance of this clause, including this paragraph (d), in each subcontract that exceeds the threshold for submission of cost or pricing data at FAR 15.403-4 on the date of agreement on price or the date of award, whichever is later.

(End of clause)

52.215-19 NOTIFICATION OF OWNERSHIP CHANGES (OCT 1997)

(a) The Contractor shall make the following notifications in writing:

(1) When the Contractor becomes aware that a change in its ownership has occurred, or is certain to occur, that could result in changes in the valuation of its capitalized assets in the accounting records, the Contractor shall notify the Administrative Contracting Officer (ACO) within 30 days.

(2) The Contractor shall also notify the ACO within 30 days whenever changes to asset valuations or any other cost changes have occurred or are certain to occur as a result of a change in ownership.

(b) The Contractor shall--

(1) Maintain current, accurate, and complete inventory records of assets and their costs;

(2) Provide the ACO or designated representative ready access to the records upon request;

(3) Ensure that all individual and grouped assets, their capitalized values, accumulated depreciation or amortization, and remaining useful lives are identified accurately before and after each of the Contractor's ownership changes; and

(4) Retain and continue to maintain depreciation and amortization schedules based on the asset records maintained before each Contractor ownership change.

The Contractor shall include the substance of this clause in all subcontracts under this contract that meet the applicability requirement of FAR 15.408(k).

(End of clause)

52.215-21 REQUIREMENTS FOR COST OR PRICING DATA OR INFORMATION OTHER THAN COST OR PRICING DATA--MODIFICATIONS (OCT 1997)

(a) Exceptions from cost or pricing data. (1) In lieu of submitting cost or pricing data for modifications under this contract, for price adjustments expected to exceed the threshold set forth at FAR 15.403-4 on the date of the agreement on price or the date of the award, whichever is later, the Contractor may submit a written request for exception by submitting the information described in the following subparagraphs. The Contracting Officer may require additional supporting information, but only to the extent necessary to determine whether an exception should be granted, and whether the price is fair and reasonable--

(i) Identification of the law or regulation establishing the price offered. If the price is controlled under law by periodic rulings, reviews, or similar actions of a governmental body, attach a copy of the controlling document, unless it was previously submitted to the contracting office.

(ii) Information on modifications of contracts or subcontracts for commercial items. (A) If--

(1) The original contract or subcontract was granted an exception from cost or pricing data requirements because the price agreed upon was based on adequate price competition or prices set by law or regulation, or was a contract or subcontract for the acquisition of a commercial item; and

(2) The modification (to the contract or subcontract) is not exempted based on one of these exceptions, then the

Contractor may provide information to establish that the modification would not change the contract or subcontract from a contract or subcontract for the acquisition of a commercial item to a contract or subcontract for the acquisition of an item other than a commercial item.

(B) For a commercial item exception, the Contractor shall provide, at a minimum, information on prices at which the same item or similar items have previously been sold that is adequate for evaluating the reasonableness of the price of the modification. Such information may include--

(1) For catalog items, a copy of or identification of the catalog and its date, or the appropriate pages for the offered items, or a statement that the catalog is on file in the buying office to which the proposal is being submitted. Provide a copy or describe current discount policies and price lists (published or unpublished), e.g., wholesale, original equipment manufacturer, or reseller. Also explain the basis of each offered price and its relationship to the established catalog price, including how the proposed price relates to the price of recent sales in quantities similar to the proposed quantities.

(2) For market-priced items, the source and date or period of the market quotation or other basis for market price, the base amount, and applicable discounts. In addition, describe the nature of the market.

(3) For items included on an active Federal Supply Service Multiple Award Schedule contract, proof that an exception has been granted for the schedule item.

(2) The Contractor grants the Contracting Officer or an authorized representative the right to examine, at any time before award, books, records, documents, or other directly pertinent records to verify any request for an exception under this clause, and the reasonableness of price. For items priced using catalog or market prices, or law or regulation , access does not extend to cost or profit information or other data relevant solely to the Contractor's determination of the prices to be offered in the catalog or marketplace.

(b) Requirements for cost or pricing data. If the Contractor is not granted an exception from the requirement to submit cost or pricing data, the following applies:

(1) The Contractor shall submit cost or pricing data and supporting attachments in accordance with Table 15-2 of FAR 15.408.

As soon as practicable after agreement on price, but before award (except for unpriced actions), the Contractor shall submit a Certificate of Current Cost or Pricing Data, as prescribed by FAR 15.406-2.

(End of clause)

52.217-7 OPTION FOR INCREASED QUANTITY--SEPARATELY PRICED LINE ITEM (MAR 1989)

The Government may require the delivery of the numbered line item, identified in the Schedule as an option item, in the quantity and at the price stated in the Schedule. The Contracting Officer may exercise the option by written notice to the Contractor within 60 calendar days from receipt of Notice to Proceed. Delivery of added items shall continue at the same rate that like items are called for under the contract, unless the parties otherwise agree.

(End of clause)

52.219-8 UTILIZATION OF SMALL BUSINESS CONCERNS (OCT 2000)

(a) It is the policy of the United States that small business concerns, veteran-owned small business concerns, service-disabled veteran-owned small business concerns, HUBZone small business concerns, small disadvantaged business concerns, and women-owned small business concerns shall have the maximum practicable opportunity to participate in performing contracts let by any Federal agency, including contracts and subcontracts for subsystems, assemblies, components, and related services for major systems. It is further the policy of the United States that its prime contractors establish procedures to ensure the timely payment of amounts due pursuant to the terms of their subcontracts with small business concerns, veteran-owned small business concerns, service-disabled veteran-owned small business concerns, HUBZone small business concerns, small disadvantaged business concerns, and women-owned small business concerns.

(b) The Contractor hereby agrees to carry out this policy in the awarding of subcontracts to the fullest extent consistent with efficient contract performance. The Contractor further agrees to cooperate in any studies or surveys as may be conducted by the United States Small Business Administration or the awarding agency of the United States as may be necessary to determine the extent of the Contractor's compliance with this clause.

Definitions. As used in this contract--

HUBZone small business concern means a small business concern that appears on the List of Qualified HUBZone Small Business Concerns maintained by the Small Business Administration.

Service-disabled veteran-owned small business concern--

(1) Means a small business concern--

(i) Not less than 51 percent of which is owned by one or more service-disabled veterans or, in the case of any publicly owned business, not less than 51 percent of the stock of which is owned by one or more service-disabled veterans; and

(ii) The management and daily business operations of which are controlled by one or more service-disabled veterans or, in the case of a veteran with permanent and severe disability, the spouse or permanent caregiver of such veteran.

(2) Service-disabled veteran means a veteran, as defined in 38 U.S.C. 101(2), with a disability that is service-connected, as defined in 38 U.S.C. 101(16).

Small business concern means a small business as defined pursuant to Section 3 of the Small Business Act and relevant regulations promulgated pursuant thereto.

Small disadvantaged business concern means a small business concern that represents, as part of its offer that--

(1) It has received certification as a small disadvantaged business concern consistent with 13 CFR part 124, subpart B;

(2) No material change in disadvantaged ownership and control has occurred since its certification;

(3) Where the concern is owned by one or more individuals, the net worth of each individual upon whom the certification is based does not exceed $750,000 after taking into account the applicable exclusions set forth at 13 CFR 124.104(c)(2); and

(4) It is identified, on the date of its representation, as a certified small disadvantaged business in the database maintained by the Small Business Administration (PRO-Net).

Veteran-owned small business concern means a small business concern--

(1) Not less than 51 percent of which is owned by one or more veterans (as defined at 38 U.S.C. 101(2)) or, in the case of any publicly owned business, not less than 51 percent of the stock of which is owned by one or more veterans; and

(2) The management and daily business operations of which are controlled by one or more veterans.

Women-owned small business concern means a small business concern--

(1) That is at least 51 percent owned by one or more women, or, in the case of any publicly owned business, at least 51 percent of the stock of which is owned by one or more women; and

(2) Whose management and daily business operations are controlled by one or more women.

(d) Contractors acting in good faith may rely on written representations by their subcontractors regarding their status as a small business concern, a veteran-owned small business concern, a service-disabled veteran-owned small business concern, a HUBZone small business concern, a small disadvantaged business concern, or a women-owned small business concern.

(End of clause)

52.219-9 SMALL BUSINESS SUBCONTRACTING PLAN (JAN 2002)--ALTERNATE II (OCT 2001).

(a) This clause does not apply to small business concerns.

(b) Definitions. As used in this clause--

Commercial item means a product or service that satisfies the definition of commercial item in section 2.101 of the Federal Acquisition Regulation.

Commercial plan means a subcontracting plan (including goals) that covers the offeror's fiscal year and that applies to the entire production of commercial items sold by either the entire company or a portion thereof (e.g., division, plant, or product line).

Individual contract plan means a subcontracting plan that covers the entire contract period (including option periods), applies to a specific contract, and has goals that are based on the offeror's planned subcontracting in support of the specific contract, except that indirect costs incurred for common or joint purposes may be allocated on a prorated basis to the contract.

Master plan means a subcontracting plan that contains all the required elements of an individual contract plan, except goals, and may be incorporated into individual contract plans, provided the master plan has been approved.

Subcontract means any agreement (other than one involving an employer-employee relationship) entered into by a Federal Government prime Contractor or subcontractor calling for supplies or services required for performance of the contract or subcontract.

(c) Proposals submitted in response to this solicitation shall include a subcontracting plan that separately addresses subcontracting with small business, veteran-owner small business, HUBZone small business, small disadvantaged business, and women-owned small business concerns. If the offeror is submitting an individual contract plan, the plan must separately address subcontracting with small business, veteran-owner small business, HUBZone small business, small disadvantaged business, and women-owned small business concerns, with a separate part for the basic contract and separate parts for each option (if any). The plan shall be included in and made a part of the resultant contract. The subcontracting plan shall be negotiated within the time specified by the Contracting Officer. Failure to submit and negotiate a subcontracting plan shall make the offeror ineligible for award of a contract.

(d) The offeror's subcontracting plan shall include the following:

(1) Goals, expressed in terms of percentages of total planned subcontracting dollars, for the use of small business, veteran-owned small business, HUBZone small business, small disadvantaged business, and women-owned small business concerns as subcontractors. The offeror shall include all subcontracts that contribute to contract performance, and may include a proportionate share of products and services that are normally allocated as indirect costs.

(2) A statement of--

(i) Total dollars planned to be subcontracted for an individual contract plan; or the offeror's total projected sales, expressed in dollars, and the total value of projected subcontracts to support the sales for a commercial plan;

(ii) Total dollars planned to be subcontracted to small business concerns;

(iii) Total dollars planned to be subcontracted to veteran-owned small business concerns;

(iv) Total dollars planned to be subcontracted to HUBZone small business concerns;

(v) Total dollars planned to be subcontracted to small disadvantaged business concerns; and

(vi) Total dollars planned to be subcontracted to women-owned small business concerns.

(3) A description of the principal types of supplies and services to be subcontracted, and an identification of the types planned for subcontracting to--

(i) Small business concerns;

(ii) Veteran-owned small business concerns;

(iii) HUBZone small business concerns;

(iv) Small disadvantaged business concerns; and

(v) Women-owned small business concerns.

(4) A description of the method used to develop the subcontracting goals in paragraph (d)(1) of this clause.

(5) A description of the method used to identify potential sources for solicitation purposes (e.g., existing company source lists, the Procurement Marketing and Access Network (PRO-Net) of the Small Business Administration (SBA), veterans service organizations, the National Minority Purchasing Council Vendor Information Service, the Research and Information Division of the Minority Business Development Agency in the Department of Commerce, or small, HUBZone, small disadvantaged, and women-owned small business trade associations). A firm may rely on the information contained in PRO-Net as an accurate representation of a concern's size and ownership characteristics for the purposes of maintaining a small, veteran-owned small, HUBZone small, small disadvantaged, and women-owned small business source list. Use of PRO-Net as its source list does not relieve a firm of its responsibilities (e.g., outreach, assistance, counseling, or publicizing subcontracting opportunities) in this clause.

(6) A statement as to whether or not the offeror in included indirect costs in establishing subcontracting goals, and a description of the method used to determine the proportionate share of indirect costs to be incurred with—

(i) Small business concerns;

(ii) Veteran-owned small business concerns;

(iii) HUBZone small business concerns;

(iv) Small disadvantaged business concerns; and

(v) Women-owned small business concerns.

(7) The name of the individual employed by the offeror who will administer the offeror's subcontracting program, and a description of the duties of the individual.

(8) A description of the efforts the offeror will make to assure that small business, veteran-owned small business, HUBZone small business, small disadvantaged business and women-owned small business concerns have an equitable opportunity to compete for subcontracts.

(9) Assurances that the offeror will include the clause of this contract entitled ``Utilization of Small Business Concerns" in all subcontracts that offer further subcontracting opportunities, and that the offeror will require all subcontractors (except small business concerns) that receive subcontracts in excess of $500,000 ($1,000,000 for construction of any public facility) to adopt a subcontracting plan that complies with the requirements of this clause.

(10) Assurances that the offeror will--

(i) Cooperate in any studies or surveys as may be required;

(ii) Submit periodic reports so that the Government can determine the extent of compliance by the offeror with the subcontracting plan;

(iii) Submit Standard Form (SF) 294, Subcontracting Report for Individual Contracts, and/or SF 295, Summary Subcontract Report, in accordance with paragraph (j) of this clause. The reports shall provide information on subcontract awards to small business concerns, veteran-owned small business concerns, service-disabled veteran-owned small business concerns, small disadvantaged business concerns, women-owned small business concerns, and Historically Black Colleges and Universities and Minority Institutions. Reporting shall be in accordance with the instructions on the forms or as provided in agency regulations.

(iv) Ensure that its subcontractors agree to submit SF 294 and SF 295.

(11) A description of the types of records that will be maintained concerning procedures that have been adopted to comply with the requirements and goals in the plan, including establishing source lists; and a description of the offeror's efforts to locate small business, veteran-owned small business, HUBZone small business, small disadvantaged business, and women-owned small business concerns and award subcontracts to them. The records shall include at least the following (on a plant-wide or company-wide basis, unless otherwise indicated)

(i) Source lists (e.g., PRO-Net), guides, and other data that identify small business, veteran-owner small business, HUBZone small business, small disadvantaged business, and women-owned small business concerns.

(ii) Organizations contacted in an attempt to locate sources that are small business, veteran-owned small business, HUBZone small business, small disadvantaged business, or women-owned small business concerns.

(iii) Records on each subcontract solicitation resulting in an award of more than $100,000, indicating--

(A) Whether small business concerns were solicited and, if not, why not;

(B) Whether veteran-owned small business concerns were solicited and, if not, why not;

(C) Whether HUBZone small business concerns were solicited and, if not, why not;

(D) Whether small disadvantaged business concerns were solicited and, if not, why not;

(E) Whether women-owned small business concerns were solicited and, if not, why not; and

(F) If applicable, the reason award was not made to a small business concern.

(iv) Records of any outreach efforts to contact--

(A) Trade associations;

(B) Business development organizations;

(C) Conferences and trade fairs to locate small, HUBZone small, small disadvantaged, and women-owned small business sources; and

(D) Veterans service organizations.

(v) Records of internal guidance and encouragement provided to buyers through--

(A) Workshops, seminars, training, etc.; and

(B) Monitoring performance to evaluate compliance with the program's requirements.

(vi) On a contract-by-contract basis, records to support award data submitted by the offeror to the Government, including the name, address, and business size of each subcontractor. Contractors having commercial plans need not comply with this requirement.

(e) In order to effectively implement this plan to the extent consistent with efficient contract performance, the Contractor shall perform the following functions:

(1) Assist small business, veteran-owner small business, HUBZone small business, small disadvantaged business, and women-owned small business concerns by arranging solicitations, time for the preparation of bids, quantities, specifications, and delivery schedules so as to facilitate the participation by such concerns. Where the Contractor's lists of potential small business, veteran-owner small business, HUBZone small business, small disadvantaged business, and women-owned small business subcontractors are excessively long, reasonable effort shall be made to give all such small business concerns an opportunity to compete over a period of time.

(2) Provide adequate and timely consideration of the potentialities of small business, veteran-owner small business, HUBZone small business, small disadvantaged business, and women-owned small business concerns in all ``make-or-buy'' decisions.

(3) Counsel and discuss subcontracting opportunities with representatives of small business, veteran-owner small business, HUBZone small business, small disadvantaged business, and women-owned small business firms.

(4) Provide notice to subcontractors concerning penalties and remedies for misrepresentations of business status as small, veteran-owner small business, HUBZone small, small disadvantaged, or women-owned small business for the purpose of obtaining a subcontract that is to be included as part or all of a goal contained in the Contractor's subcontracting plan.

(f) A master plan on a plant or division-wide basis that contains all the elements required by paragraph (d) of this clause, except goals, may be incorporated by reference as a part of the subcontracting plan required of the offeror by this clause; provided--

(1) the master plan has been approved, (2) the offeror ensures that the master plan is updated as necessary and provides copies of the approved master plan, including evidence of its approval, to the Contracting Officer, and (3) goals and any deviations from the master plan deemed necessary by the Contracting Officer to satisfy the requirements of this contract are set forth in the individual subcontracting plan.

(g) A commercial plan is the preferred type of subcontracting plan for contractors furnishing commercial items. The commercial plan shall relate to the offeror's planned subcontracting generally, for both commercial and Government business, rather than solely to the Government contract. Commercial plans are also preferred for subcontractors that provide commercial items under a prime contract, whether or not the prime contractor is supplying a commercial item.

(h) Prior compliance of the offeror with other such subcontracting plans under previous contracts will be considered by the Contracting Officer in determining the responsibility of the offeror for award of the contract.

(i) The failure of the Contractor or subcontractor to comply in good faith with (1) the clause of this contract entitled "Utilization Of Small Business Concerns," or (2) an approved plan required by this clause, shall be a material breach of the contract.

(j) The Contractor shall submit the following reports:

(1) Standard Form 294, Subcontracting Report for Individual Contracts. This report shall be submitted to the Contracting Officer semiannually and at contract completion. The report covers subcontract award data related to this contract. This report is not required for commercial plans.

(2) Standard Form 295, Summary Subcontract Report. This report encompasses all of the contracts with the awarding agency. It must be submitted semi-annually for contracts with the Department of Defense and annually for contracts with civilian agencies. If the reporting activity is covered by a commercial plan, the reporting activity must report annually all subcontract awards under that plan. All reports submitted at the close of each fiscal year (both individual and commercial plans) shall include a breakout, in the Contractor's format, of subcontract awards, in whole dollars, to small disadvantaged business concerns by North American Industry Classification System (NAICS) Industry Subsector. For a commercial plan, the Contractor may obtain from each of its subcontractors a predominant NAICS Industry Subsector and report all awards to that subcontractor under its predominant NAICS Industry Subsector.

(End of clause)

52.219-14 LIMITATIONS ON SUBCONTRACTING (DEC 1996)

(a) This clause does not apply to the unrestricted portion of a partial set-aside.

(b) By submission of an offer and execution of a contract, the Offeror/Contractor agrees that in performance of the contract in the case of a contract for--

(1) Services (except construction). At least 50 percent of the cost of contract performance incurred for personnel shall be expended for employees of the concern.

(2) Supplies (other than procurement from a nonmanufacturer of such supplies). The concern shall perform work for at least 50 percent of the cost of manufacturing the supplies, not including the cost of materials.

(3) General construction. The concern will perform at least 15 percent of the cost of the contract, not including the cost of materials, with its own employees.

(4) Construction by special trade contractors. The concern will perform at least 25 percent of the cost of the contract, not including the cost of materials, with its own employees.

52.222-4 CONTRACT WORK HOURS AND SAFETY STANDARDS ACT - OVERTIME COMPENSATION. (SEP 2000)

(a) Overtime requirements. No Contractor or subcontractor employing laborers or mechanics (see Federal Acquisition Regulation 22.300) shall require or permit them to work over 40 hours in any workweek unless they are paid at least 1 and 1/2 times the basic rate of pay for each hour worked over 40 hours.

(b) Violation; liability for unpaid wages; liquidated damages. The responsible Contractor and subcontractor are liable for unpaid wages if they violate the terms in paragraph (a) of this clause. In addition, the Contractor and subcontractor are liable for liquidated damages payable to the Government. The Contracting Officer will assess liquidated damages at the rate of $10 per affected employee for each calendar day on which the employer required or permitted the employee to work in excess of the standard workweek of 40 hours without paying overtime wages required by the Contract Work Hours and Safety Standards Act.

(c) Withholding for unpaid wages and liquidated damages. The Contracting Officer will withhold from payments due under the contract sufficient funds required to satisfy any Contractor or subcontractor liabilities for unpaid wages and liquidated damages. If amounts withheld under the contract are insufficient to satisfy Contractor or subcontractor liabilities, the Contracting Officer will withhold payments from other Federal or Federally assisted contracts held by the same Contractor that are subject to the Contract Work Hours and Safety Standards Act.

(d) Payrolls and basic records.

(1) The Contractor and its subcontractors shall maintain payrolls and basic payroll records for all laborers and mechanics working on the contract during the contract and shall make them available to the Government until 3 years after contract completion. The records shall contain the name and address of each employee, social security number, labor classifications, hourly rates of wages paid, daily and weekly number of hours worked, deductions made, and actual wages paid. The records need not duplicate those required for construction work by Department of Labor regulations at 29 CFR 5.5(a)(3) implementing the Davis-Bacon Act.

(2) The Contractor and its subcontractors shall allow authorized representatives of the Contracting Officer or the Department of Labor to inspect, copy, or transcribe records maintained under paragraph (d)(1) of this clause. The Contractor or subcontractor also shall allow authorized representatives of the Contracting Officer or Department of Labor to interview employees in the workplace during working hours.

(e) Subcontracts. The Contractor shall insert the provisions set forth in paragraphs (a) through (d) of this clause in subcontracts exceeding $100,000 and require subcontractors to include these provisions in any lower tier subcontracts. The Contractor shall be responsible for compliance by any subcontractor or lower-tier subcontractor with the provisions set forth in paragraphs (a) through (d) of this clause.

(End of clause)

52.222-6 DAVIS-BACON ACT (FEB 1995)

(a) All laborers and mechanics employed or working upon the site of the work will be paid unconditionally and not less often than once a week, and without subsequent deduction or rebate on any account (except such payroll deductions as are permitted by regulations issued by the Secretary of Labor under the Copeland Act (29 CFR Part 3), the full amount of wages and bona fide fringe benefits (or cash equivalents thereof) due at time of payment computed at rates not less than those contained in the wage determination of the Secretary of Labor which is attached hereto

and made a part hereof, regardless of any contractual relationship which may be alleged to exist between the Contractor and such laborers and mechanics. Contributions made or costs reasonably anticipated for bona fide fringe benefits under section 1(b)(2) of the Davis-Bacon Act on behalf of laborers or mechanics are considered wages paid to such laborers or mechanics, subject to the provisions of paragraph (d) of this clause; also, regular contributions made or costs incurred for more than a weekly period (but not less often than quarterly) under plans, funds, or programs which cover the particular weekly period, are deemed to be constructively made or incurred during such period. Such laborers and mechanics shall be paid not less than the appropriate wage rate and fringe benefits in the wage determination for the classification of work actually performed, without regard to skill, except as provided in the clause entitled Apprentices and Trainees. Laborers or mechanics performing work in more than one classification may be compensated at the rate specified for each classification for the time actually worked therein; provided, That the employer's payroll records accurately set forth the time spent in each classification in which work is performed. The wage determination (including any additional classifications and wage rates conformed under paragraph (b) of this clause) and the Davis-Bacon poster (WH-1321) shall be posted at all times by the Contractor and its subcontractors at the site of the work in a prominent and accessible place where it can be easily seen by the workers.

(b)(1) The Contracting Officer shall require that any class of laborers or mechanics which is not listed in the wage determination and which is to be employed under the contract shall be classified in conformance with the wage determination. The Contracting Officer shall approve an additional classification and wage rate and fringe benefits therefor only when all the following criteria have been met:

(i) The work to be performed by the classification requested is not performed by a classification in the wage determination.

(ii) The classification is utilized in the area by the construction industry.

(iii) The proposed wage rate, including any bona fide fringe benefits, bears a reasonable relationship to the wage rates contained in the wage determination.

(2) If the Contractor and the laborers and mechanics to be employed in the classification (if known), or their representatives, and the Contracting Officer agree on the classification and wage rate (including the amount designated for fringe benefits, where appropriate), a report of the action taken shall be sent by the Contracting Officer to the Administrator of the Wage and Hour Division, Employment Standards Administration, U.S. Department of Labor, Washington, DC 20210. The Administrator or an authorized representative will approve, modify, or disapprove every additional classification action within 30 days of receipt and so advise the Contracting Officer or will notify the Contracting Officer within the 30-day period that additional time is necessary.

(3) In the event the Contractor, the laborers or mechanics to be employed in the classification, or their representatives, and the Contracting Officer do not agree on the proposed classification and wage rate (including the amount designated for fringe benefits, where appropriate), the Contracting Officer shall refer the questions, including the views of all interested parties and the recommendation of the Contracting Officer, to the Administrator of the Wage and Hour Division for determination. The Administrator, or an authorized representative, will issue a determination within 30 days of receipt and so advise the Contracting Officer or will notify the Contracting Officer within the 30-day period that additional time is necessary.

(4) The wage rate (including fringe benefits, where appropriate) determined pursuant to subparagraphs (b)(2) and (b)(3) of this clause shall be paid to all workers performing work in the classification under this contract from the first day on which work is performed in the classification.

(c) Whenever the minimum wage rate prescribed in the contract for a class of laborers or mechanics includes a fringe benefit which is not expressed as an hourly rate, the Contractor shall either pay the benefit as stated in the wage determination or shall pay another bona fide fringe benefit or an hourly cash equivalent thereof.

(d) If the Contractor does not make payments to a trustee or other third person, the Contractor may consider as part

of the wages of any laborer or mechanic the amount of any costs reasonably anticipated in providing bona fide fringe benefits under a plan or program; provided, That the Secretary of Labor has found, upon the written request of the Contractor, that the applicable standards of the Davis-Bacon Act have been met. The Secretary of Labor may require the Contractor to set aside in a separate account assets for the meeting of obligations under the plan or program.

(End of clause)

52.222-7 WITHHOLDING OF FUNDS (FEB 1988)

The Contracting Officer shall, upon his or her own action or upon written request of an authorized representative of the Department of Labor, withhold or cause to be withheld from the Contractor under this contract or any other Federal contract with the same Prime Contractor, or any other Federally assisted contract subject to Davis-Bacon prevailing wage requirements, which is held by the same Prime Contractor, so much of the accrued payments or advances as may be considered necessary to pay laborers and mechanics, including apprentices, trainees, and helpers, employed by the Contractor or any subcontractor the full amount of wages required by the contract. In the event of failure to pay any laborer or mechanic, including any apprentice, trainee, or helper, employed or working on the site of the work, all or part of the wages required by the contract, the Contracting Officer may, after written notice to the Contractor, take such action as may be necessary to cause the suspension of any further payment, advance, or guarantee of funds until such violations have ceased.

(End of clause)

52.222-8 PAYROLLS AND BASIC RECORDS (FEB 1988)

(a) Payrolls and basic records relating thereto shall be maintained by the Contractor during the course of the work and preserved for a period of 3 years thereafter for all laborers and mechanics working at the site of the work. Such records shall contain the name, address, and social security number of each such worker, his or her correct classification, hourly rates of wages paid (including rates of contributions or costs anticipated for bona fide fringe benefits or cash equivalents thereof of the types described in section 1(b)(2)(B) of the Davis-Bacon Act), daily and weekly number of hours worked, deductions made, and actual wages paid. Whenever the Secretary of Labor has found, under paragraph (d) of the clause entitled Davis-Bacon Act, that the wages of any laborer or mechanic include the amount of any costs reasonably anticipated in providing benefits under a plan or program described in section 1(b)(2)(B) of the Davis-Bacon Act, the Contractor shall maintain records which show that the commitment to provide such benefits is enforceable, that the plan or program is financially responsible, and that the plan or program has been communicated in writing to the laborers or mechanics affected, and records which show the costs anticipated or the actual cost incurred in providing such benefits. Contractors employing apprentices or trainees under approved programs shall maintain written evidence of the registration of apprenticeship programs and certification of trainee programs, the registration of the apprentices and trainees, and the ratios and wage rates prescribed in the applicable programs.

(b)(1) The Contractor shall submit weekly for each week in which any contract work is performed a copy of all payrolls to the Contracting Officer. The payrolls submitted shall set out accurately and completely all of the information required to be maintained under paragraph (a) of this clause. This information may be submitted in any form desired. Optional Form WH-347 (Federal Stock Number 029-005-00014-1) is available for this purpose and may be purchased from the Superintendent of Documents, U.S. Government Printing Office, Washington, DC 20402. The Prime Contractor is responsible for the submission of copies of payrolls by all subcontractors.

(2) Each payroll submitted shall be accompanied by a "Statement of Compliance," signed by the Contractor or subcontractor or his or her agent who pays or supervises the payment of the persons employed under the contract and

shall certify--

(i) That the payroll for the payroll period contains the information required to be maintained under paragraph (a) of this clause and that such information is correct and complete;

(ii) That each laborer or mechanic (including each helper, apprentice, and trainee) employed on the contract during the payroll period has been paid the full weekly wages earned, without rebate, either directly or indirectly, and that no deductions have been made either directly or indirectly from the full wages earned, other than permissible deductions as set forth in the Regulations, 29 CFR Part 3; and

(iii) That each laborer or mechanic has been paid not less than the applicable wage rates and fringe benefits or cash equivalents for the classification of work performed, as specified in the applicable wage determination incorporated into the contract.

(3) The weekly submission of a properly executed certification set forth on the reverse side of Optional Form WH-347 shall satisfy the requirement for submission of the "Statement of Compliance" required by subparagraph (b)(2) of this clause.

(4) The falsification of any of the certifications in this clause may subject the Contractor or subcontractor to civil or criminal prosecution under Section 1001 of Title 18 and Section 3729 of Title 31 of the United States Code.

(c) The Contractor or subcontractor shall make the records required under paragraph (a) of this clause available for inspection, copying, or transcription by the Contracting Officer or authorized representatives of the Contracting Officer or the Department of Labor. The Contractor or subcontractor shall permit the Contracting Officer or representatives of the Contracting Officer or the Department of Labor to interview employees during working hours on the job. If the Contractor or subcontractor fails to submit required records or to make them available, the Contracting Officer may, after written notice to the Contractor, take such action as may be necessary to cause the suspension of any further payment. Furthermore, failure to submit the required records upon request or to make such records available may be grounds for debarment action pursuant to 29 CFR 5.12.

(End of clause)

52.222-9 APPRENTICES AND TRAINEES (FEB 1988)

(a) Apprentices. Apprentices will be permitted to work at less than the predetermined rate for the work they performed when they are employed pursuant to and individually registered in a bona fide apprenticeship program registered with the U.S. Department of Labor, Employment and Training Administration, Bureau of Apprenticeship and Training, or with a State Apprenticeship Agency recognized by the Bureau, or if a person is employed in his or her first 90 days of probationary employment as an apprentice in such an apprenticeship program, who is not individually registered in the program, but who has been certified by the Bureau of Apprenticeship and Training or a State Apprenticeship Agency (where appropriate) to be eligible for probationary employment as an apprentice. The allowable ratio of apprentices to journeymen on the job site in any craft classification shall not be greater than the ratio permitted to the Contractor as to the entire work force under the registered program. Any worker listed on a payroll at an apprentice wage rate, who is not registered or otherwise employed as stated in this paragraph, shall be paid not less than the applicable wage determination for the classification of work actually performed. In addition, any apprentice performing work on the job site in excess of the ratio permitted under the registered program shall be paid not less than the applicable wage rate on the wage determination for the work actually performed. Where a contractor is performing construction on a project in a locality other than that in which its program is registered, the ratios and wage rates (expressed in percentages of the journeyman's hourly rate) specified in the Contractor's or subcontractor's registered program shall be observed. Every apprentice must be paid at not less than the rate specified in the registered program for the apprentice's level of progress, expressed as a percentage of the journeyman hourly rate specified in the applicable wage determination. Apprentices shall be paid fringe benefits in

accordance with the provisions of the apprenticeship program. If the apprenticeship program does not specify fringe benefits, apprentices must be paid the full amount of fringe benefits listed on the wage determination for the applicable classification. If the Administrator determines that a different practice prevails for the applicable apprentice classification, fringes shall be paid in accordance with that determination. In the event the Bureau of Apprenticeship and Training, or a State Apprenticeship Agency recognized by the Bureau, withdraws approval of an apprenticeship program, the Contractor will no longer be permitted to utilize apprentices at less than the applicable predetermined rate for the work performed until an acceptable program is approved.

(b) Trainees. Except as provided in 29 CFR 5.16, trainees will not be permitted to work at less than the predetermined rate for the work performed unless they are employed pursuant to and individually registered in a program which has received prior approval, evidenced by formal certification by the U.S. Department of Labor, Employment and Training Administration. The ratio of trainees to journeymen on the job site shall not be greater than permitted under the plan approved by the Employment and Training Administration. Every trainee must be paid at not less than the rate specified in the approved program for the trainee's level of progress, expressed as a percentage of the journeyman hourly rate specified in the applicable wage determination. Trainees shall be paid fringe benefits in accordance with the provisions of the trainee program. If the trainee program does not mention fringe benefits, trainees shall be paid the full amount of fringe benefits listed in the wage determination unless the Administrator of the Wage and Hour Division determines that there is an apprenticeship program associated with the corresponding journeyman wage rate in the wage determination which provides for less than full fringe benefits for apprentices. Any employee listed on the payroll at a trainee rate who is not registered and participating in a training plan approved by the Employment and Training Administration shall be paid not less than the applicable wage rate in the wage determination for the classification of work actually performed. In addition, any trainee performing work on the job site in excess of the ratio permitted under the registered program shall be paid not less than the applicable wage rate in the wage determination for the work actually performed. In the event the Employment and Training Administration withdraws approval of a training program, the Contractor will no longer be permitted to utilize trainees at less than the applicable predetermined rate for the work performed until an acceptable program is approved.

(c) Equal employment opportunity. The utilization of apprentices, trainees, and journeymen under this clause shall be in conformity with the equal employment opportunity requirements of Executive Order 11246, as amended, and 29 CFR Part 30.

(End of clause)

52.222-10 COMPLIANCE WITH COPELAND ACT REQUIREMENTS (FEB 1988)

The Contractor shall comply with the requirements of 29 CFR Part 3, which are hereby incorporated by reference in this contract.

(End of clause)

52.222-11 SUBCONTRACTS (LABOR STANDARDS (FEB 1988)

(a) The Contractor or subcontractor shall insert in any subcontracts the clauses entitled Davis-Bacon Act, Contract Work Hours and Safety Standards Act-Overtime Compensation, Apprentices and Trainees, Payrolls and Basic Records, Compliance with Copeland Act Requirements, Withholding of Funds, Subcontracts (Labor Standards), Contract Termination-Debarment, Disputes Concerning Labor Standards, Compliance with Davis-Bacon and Related Act Regulations, and Certification of Eligibility, and such other clauses as the Contracting Officer may, by appropriate instructions, require, and also a clause requiring subcontractors to include these clauses in any lower tier subcontracts. The Prime Contractor shall be responsible for compliance by any subcontractor or lower tier

subcontractor with all the contract clauses cited in this paragraph.

(b)(1) Within 14 days after award of the contract, the Contractor shall deliver to the Contracting Officer a completed Statement and Acknowledgment Form (SF 1413) for each subcontract, including the subcontractor's signed and dated acknowledgment that the clauses set forth in paragraph (a) of this clause have been included in the subcontract.

(2) Within 14 days after the award of any subsequently awarded subcontract the Contractor shall deliver to the Contracting Officer an updated completed SF 1413 for such additional subcontract.

(End of clause)

52.222-13 COMPLIANCE WITH DAVIS-BACON AND RELATED ACT REGULATIONS (FEB 1988)

All rulings and interpretations of the Davis-Bacon and Related Acts contained in 29 CFR Parts 1, 3, and 5 are hereby incorporated by reference in this contract.

(End of clause)

52.222-14 DISPUTES CONCERNING LABOR STANDARDS (FEB 1988)

The United States Department of Labor has set forth in 29 CFR Parts 5, 6, and 7 procedures for resolving disputes concerning labor standards requirements. Such disputes shall be resolved in accordance with those procedures and not the Disputes clause of this contract. Disputes within the meaning of this clause include disputes between the Contractor (or any of its subcontractors) and the contracting agency, the U.S. Department of Labor, or the employees or their representatives.

(End of clause)

52.222-15 CERTIFICATION OF ELIGIBILITY (FEB 1988)

(a) By entering into this contract, the Contractor certifies that neither it (nor he or she) nor any person or firm who has an interest in the Contractor's firm is a person or firm ineligible to be awarded Government contracts by virtue of section 3(a) of the Davis-Bacon Act or 29 CFR 5.12(a)(1).

(b) No part of this contract shall be subcontracted to any person or firm ineligible for award of a Government contract by virtue of section 3(a) of the Davis-Bacon Act or 29 CFR 5.12(a)(1).

(e) The penalty for making false statements is prescribed in the U.S. Criminal Code, 18 U.S.C. 1001.

(End of clause)

52.222-21 PROHIBITION OF SEGREGATED FACILITIES (FEB 1999)

(a) Segregated facilities, as used in this clause, means any waiting rooms, work areas, rest rooms and wash rooms, restaurants and other eating areas, time clocks, locker rooms and other storage or dressing areas, parking lots, drinking fountains, recreation or entertainment areas, transportation, and housing facilities provided for employees,

that are segregated by explicit directive or are in fact segregated on the basis of race, color, religion, sex, or national origin because of written or oral policies or employee custom. The term does not include separate or single-user rest rooms or necessary dressing or sleeping areas provided to assure privacy between the sexes.

(b) The Contractor agrees that it does not and will not maintain or provide for its employees any segregated facilities at any of its establishments, and that it does not and will not permit its employees to perform their services at any location under its control where segregated facilities are maintained. The Contractor agrees that a breach of this clause is a violation of the Equal Opportunity clause in this contract.

(c) The Contractor shall include this clause in every subcontract and purchase order that is subject to the Equal Opportunity clause of this contract.

(End of clause)

52.222-23 NOTICE OF REQUIREMENT FOR AFFIRMATIVE ACTION TO ENSURE EQUAL EMPLOYMENT OPPORTUNITY FOR CONSTRUCTION (FEB 1999)

(a) The offeror's attention is called to the Equal Opportunity clause and the Affirmative Action Compliance Requirements for Construction clause of this solicitation.

(b) The goals for minority and female participation, expressed in percentage terms for the Contractor's aggregate workforce in each trade on all construction work in the covered area, are as follows:

Goals for minority participation for each trade	Goals for female participation for each trade
12.7%	6.9%

These goals are applicable to all the Contractor's construction work performed in the covered area. If the Contractor performs construction work in a geographical area located outside of the covered area, the Contractor shall apply the goals established for the geographical area where the work is actually performed. Goals are published periodically in the Federal Register in notice form, and these notices may be obtained from any Office of Federal Contract Compliance Programs office.

(c) The Contractor's compliance with Executive Order 11246, as amended, and the regulations in 41 CFR 60-4 shall be based on (1) its implementation of the Equal Opportunity clause, (2) specific affirmative action obligations required by the clause entitled "Affirmative Action Compliance Requirements for Construction," and (3) its efforts to meet the goals. The hours of minority and female employment and training must be substantially uniform throughout the length of the contract, and in each trade. The Contractor shall make a good faith effort to employ minorities and women evenly on each of its projects. The transfer of minority or female employees or trainees from Contractor to Contractor, or from project to project, for the sole purpose of meeting the Contractor's goals shall be a violation of the contract, Executive Order 11246, as amended, and the regulations in 41 CFR 60-4. Compliance with the goals will be measured against the total work hours performed.

(d) The Contractor shall provide written notification to the Deputy Assistant Secretary for Federal Contract Compliance, U.S. Department of Labor, within 10 working days following award of any construction subcontract in excess of $10,000 at any tier for construction work under the contract resulting from this solicitation. The notification shall list the --

(1) Name, address, and telephone number of the subcontractor;

(2) Employer's identification number of the subcontractor;

(3) Estimated dollar amount of the subcontract;

(4) Estimated starting and completion dates of the subcontract; and

(5) Geographical area in which the subcontract is to be performed.

(e) As used in this Notice, and in any contract resulting from this solicitation, the "covered area" is Jackson, County.

(End of provision)

52.222-26 EQUAL OPPORTUNITY (APR 2002)

(a) Definition. United States, as used in this clause, means the 50 States, the District of Columbia, Puerto Rico, the Northern Mariana Islands, American Samoa, Guam, the U.S. Virgin Islands, and Wake Island.

(b) If, during any 12-month period (including the 12 months preceding the award of this contract), the Contractor has been or is awarded nonexempt Federal contracts and/or subcontracts that have an aggregate value in excess of $10,000, the Contractor shall comply with paragraphs (b)(1) through (b)(11) of this clause, except for work performed outside the United States by employees who were not recruited within the United States. Upon request, the Contractor shall provide information necessary to determine the applicability of this clause.

(1) The Contractor shall not discriminate against any employee or applicant for employment because of race, color, religion, sex, or national origin. However, it shall not be a violation of this clause for the Contractor to extend a publicly announced preference in employment to Indians living on or near an Indian reservation, in connection with employment opportunities on or near an Indian reservation, as permitted by 41 CFR 60-1.5.

(2) The Contractor shall take affirmative action to ensure that applicants are employed, and that employees are treated during employment, without regard to their race, color, religion, sex, or national origin. This shall include, but not be limited to, (i) employment, (ii) upgrading, (iii) demotion, (iv) transfer, (v) recruitment or recruitment advertising, (vi) layoff or termination, (vii) rates of pay or other forms of compensation, and (viii) selection for training, including apprenticeship.

(3) The Contractor shall post in conspicuous places available to employees and applicants for employment the notices to be provided by the Contracting Officer that explain this clause.

(4) The Contractor shall, in all solicitations or advertisements for employees placed by or on behalf of the Contractor, state that all qualified applicants will receive consideration for employment without regard to race, color, religion, sex, or national origin.

(5) The Contractor shall send, to each labor union or representative of workers with which it has a collective bargaining agreement or other contract or understanding, the notice to be provided by the Contracting Officer advising the labor union or workers' representative of the Contractor's commitments under this clause, and post copies of the notice in conspicuous places available to employees and applicants for employment.

(6) The Contractor shall comply with Executive Order 11246, as amended, and the rules, regulations, and orders of the Secretary of Labor.

(7) The Contractor shall furnish to the contracting agency all information required by Executive Order 11246, as amended, and by the rules, regulations, and orders of the Secretary of Labor. The Contractor shall also file Standard Form 100 (EEO-1), or any successor form, as prescribed in 41 CFR part 60-1. Unless the Contractor has filed within

the 12 months preceding the date of contract award, the Contractor shall, within 30 days after contract award, apply to either the regional Office of Federal Contract Compliance Programs (OFCCP) or the local office of the Equal Employment Opportunity Commission for the necessary forms.

(8) The Contractor shall permit access to its premises, during normal business hours, by the contracting agency or the OFCCP for the purpose of conducting on-site compliance evaluations and complaint investigations. The Contractor shall permit the Government to inspect and copy any books, accounts, records (including computerized records), and other material that may be relevant to the matter under investigation and pertinent to compliance with Executive Order 11246, as amended, and rules and regulations that implement the Executive Order.

(9) If the OFCCP determines that the Contractor is not in compliance with this clause or any rule, regulation, or order of the Secretary of Labor, this contract may be canceled, terminated, or suspended in whole or in part and the Contractor may be declared ineligible for further Government contracts, under the procedures authorized in Executive Order 11246, as amended. In addition, sanctions may be imposed and remedies invoked against the Contractor as provided in Executive Order 11246, as amended; in the rules, regulations, and orders of the Secretary of Labor; or as otherwise provided by law.

(10) The Contractor shall include the terms and conditions of subparagraphs (b)(1) through (11) of this clause in every subcontract or purchase order that is not exempted by the rules, regulations, or orders of the Secretary of Labor issued under Executive Order 11246, as amended, so that these terms and conditions will be binding upon each subcontractor or vendor.

(11) The Contractor shall take such action with respect to any subcontract or purchase order as the contracting officer may direct as a means of enforcing these terms and conditions, including sanctions for noncompliance; provided, that if the Contractor becomes involved in, or is threatened with, litigation with a subcontractor or vendor as a result of any direction, the Contractor may request the United States to enter into the litigation to protect the interests of the United States.

(c) Notwithstanding any other clause in this contract, disputes relative to this clause will be governed by the procedures in 41 CFR 60-1.1.

(End of clause)

52.222-27 AFFIRMATIVE ACTION COMPLIANCE REQUIREMENTS FOR CONSTRUCTION (FEB 1999)

(a) Definitions. "Covered area," as used in this clause, means the geographical area described in the solicitation for this contract.

"Deputy Assistant Secretary," as used in this clause, means Deputy Assistant Secretary for Federal Contract Compliance, U.S. Department of Labor, or a designee.

"Employer's identification number," as used in this clause, means the Federal Social Security number used on the employer's quarterly federal tax return, U.S. Treasury Department Form 941.

"Minority," as used in this clause, means--

(1) American Indian or Alaskan Native (all persons having origins in any of the original peoples of North America and maintaining identifiable tribal affiliations through membership and participation or community identification).

(2) Asian and Pacific Islander (all persons having origins in any of the original peoples of the Far East, Southeast Asia, the Indian Subcontinent, or the Pacific Islands);

(3) Black (all persons having origins in any of the black African racial groups not of Hispanic origin); and

(4) Hispanic (all persons of Mexican, Puerto Rican, Cuban, Central or South American, or other Spanish culture or origin, regardless of race).

(b) If the Contractor, or a subcontractor at any tier, subcontracts a portion of the work involving any construction trade, each such subcontract in excess of $10,000 shall include this clause and the Notice containing the goals for minority and female participation stated in the solicitation for this contract.

(c) If the Contractor is participating in a Hometown Plan (41 CFR 60-4) approved by the U.S. Department of Labor in a covered area, either individually or through an association, its affirmative action obligations on all work in the plan area (including goals) shall comply with the plan for those trades that have unions participating in the plan. Contractors must be able to demonstrate participation in, and compliance with, the provisions of the plan. Each Contractor or subcontractor participating in an approved plan is also required to comply with its obligations under the Equal Opportunity clause, and to make a good faith effort to achieve each goal under the plan in each trade in which it has employees. The overall good-faith performance by other Contractors or subcontractors toward a goal in an approved plan does not excuse any Contractor's or subcontractor's failure to make good-faith efforts to achieve the plan's goals.

(d) The Contractor shall implement the affirmative action procedures in subparagraphs (g)(1) through (16) of this clause. The goals stated in the solicitation for this contract are expressed as percentages of the total hours of employment and training of minority and female utilization that the Contractor should reasonably be able to achieve in each construction trade in which it has employees in the covered area. If the Contractor performs construction work in a geographical area located outside of the covered area, it shall apply the goals established for the geographical area where that work is actually performed. The Contractor is expected to make substantially uniform progress toward its goals in each craft.

(e) Neither the terms and conditions of any collective bargaining agreement, nor the failure by a union with which the Contractor has a collective bargaining agreement, to refer minorities or women shall excuse the Contractor's obligations under this clause, Executive Order 11246, as amended, or the regulations thereunder.

(f) In order for the nonworking training hours of apprentices and trainees to be counted in meeting the goals, apprentices and trainees must be employed by the Contractor during the training period, and the Contractor must have made a commitment to employ the apprentices and trainees at the completion of their training, subject to the availability of employment opportunities. Trainees must be trained pursuant to training programs approved by the U.S. Department of Labor.

(g) The Contractor shall take affirmative action to ensure equal employment opportunity. The evaluation of the Contractor's compliance with this clause shall be based upon its effort to achieve maximum results from its actions. The Contractor shall document these efforts fully and implement affirmative action steps at least as extensive as the following:

(1) Ensure a working environment free of harassment, intimidation, and coercion at all sites and in all facilities where the Contractor's employees are assigned to work. The Contractor, if possible, will assign two or more women to each construction project. The Contractor shall ensure that foremen, superintendents, and other onsite supervisory personnel are aware of and carry out the Contractor's obligation to maintain such a working environment, with specific attention to minority or female individuals working at these sites or facilities.

(2) Establish and maintain a current list of sources for minority and female recruitment. Provide written notification to minority and female recruitment sources and community organizations when the Contractor or its unions have employment opportunities available, and maintain a record of the organizations' responses.

(3) Establish and maintain a current file of the names, addresses, and telephone numbers of each minority and female off-the-street applicant, referrals of minorities or females from unions, recruitment sources, or community

organizations, and the action taken with respect to each individual. If an individual was sent to the union hiring hall for referral and not referred back to the Contractor by the union or, if referred back, not employed by the Contractor, this shall be documented in the file, along with whatever additional actions the Contractor may have taken.

(4) Immediately notify the Deputy Assistant Secretary when the union or unions with which the Contractor has a collective bargaining agreement has not referred back to the Contractor a minority or woman sent by the Contractor, or when the Contractor has other information that the union referral process has impeded the Contractor's efforts to meet its obligations.

(5) Develop on-the-job training opportunities and/or participate in training programs for the area that expressly include minorities and women, including upgrading programs and apprenticeship and trainee programs relevant to the Contractor's employment needs, especially those programs funded or approved by the Department of Labor. The Contractor shall provide notice of these programs to the sources compiled under subparagraph (g)(2) of this clause.

(6) Disseminate the Contractor's equal employment policy by--

(i) Providing notice of the policy to unions and to training, recruitment, and outreach programs, and requesting their cooperation in assisting the Contractor in meeting its contract obligations;

(ii) Including the policy in any policy manual and in collective bargaining agreements;

(iii) Publicizing the policy in the company newspaper, annual report, etc.;

(iv) Reviewing the policy with all management personnel and with all minority and female employees at least once a year; and

(v) Posting the policy on bulletin boards accessible to employees at each location where construction work is performed.

(7) Review, at least annually, the Contractor's equal employment policy and affirmative action obligations with all employees having responsibility for hiring, assignment, layoff, termination, or other employment decisions. Conduct review of this policy with all on-site supervisory personnel before initiating construction work at a job site. A written record shall be made and maintained identifying the time and place of these meetings, persons attending, subject matter discussed, and disposition of the subject matter.

(8) Disseminate the Contractor's equal employment policy externally by including it in any advertising in the news media, specifically including minority and female news media. Provide written notification to, and discuss this policy with, other Contractors and subcontractors with which the Contractor does or anticipates doing business.

(9) Direct recruitment efforts, both oral and written, to minority, female, and community organizations, to schools with minority and female students, and to minority and female recruitment and training organizations serving the Contractor's recruitment area and employment needs. Not later than 1 month before the date for acceptance of applications for apprenticeship or training by any recruitment source, send written notification to organizations such as the above, describing the openings, screening procedures, and tests to be used in the selection process.

(10) Encourage present minority and female employees to recruit minority persons and women. Where reasonable, provide after-school, summer, and vacation employment to minority and female youth both on the site and in other areas of the Contractor's workforce.

(11) Validate all tests and other selection requirements where required under 41 CFR 60-3.

(12) Conduct, at least annually, an inventory and evaluation at least of all minority and female personnel for promotional opportunities. Encourage these employees to seek or to prepare for, through appropriate training, etc.,

opportunities for promotion.

(13) Ensure that seniority practices, job classifications, work assignments, and other personnel practices do not have a discriminatory effect by continually monitoring all personnel and employment-related activities to ensure that the Contractor's obligations under this contract are being carried out.

(14) Ensure that all facilities and company activities are nonsegregated except that separate or single-user rest rooms and necessary dressing or sleeping areas shall be provided to assure privacy between the sexes.

(15) Maintain a record of solicitations for subcontracts for minority and female construction contractors and suppliers, including circulation of solicitations to minority and female contractor associations and other business associations.

(16) Conduct a review, at least annually, of all supervisors' adherence to and performance under the Contractor's equal employment policy and affirmative action obligations.

(h) The Contractor is encouraged to participate in voluntary associations that may assist in fulfilling one or more of the affirmative action obligations contained in subparagraphs (g)(1) through (16) of this clause. The efforts of a contractor association, joint contractor-union, contractor-community, or similar group of which the contractor is a member and participant may be asserted as fulfilling one or more of its obligations under subparagraphs (g)(1) through (16) of this clause, provided the Contractor--

(1) Actively participates in the group;

(2) Makes every effort to ensure that the group has a positive impact on the employment of minorities and women in the industry;

(3) Ensures that concrete benefits of the program are reflected in the Contractor's minority and female workforce participation;

(4) Makes a good-faith effort to meet its individual goals and timetables; and

(5) Can provide access to documentation that demonstrates the effectiveness of actions taken on behalf of the Contractor. The obligation to comply is the Contractor's, and failure of such a group to fulfill an obligation shall not be a defense for the Contractor's noncompliance.

(i) A single goal for minorities and a separate single goal for women shall be established. The Contractor is required to provide equal employment opportunity and to take affirmative action for all minority groups, both male and female, and all women, both minority and nonminority. Consequently, the Contractor may be in violation of Executive Order 11246, as amended, if a particular group is employed in a substantially disparate manner.

(j) The Contractor shall not use goals or affirmative action standards to discriminate against any person because of race, color, religion, sex, or national origin.

(k) The Contractor shall not enter into any subcontract with any person or firm debarred from Government contracts under Executive Order 11246, as amended.

(l) The Contractor shall carry out such sanctions and penalties for violation of this clause and of the Equal Opportunity clause, including suspension, termination, and cancellation of existing subcontracts, as may be imposed or ordered under Executive Order 11246, as amended, and its implementing regulations, by the OFCCP. Any failure to carry out these sanctions and penalties as ordered shall be a violation of this clause and Executive Order 11246, as amended.

(m) The Contractor in fulfilling its obligations under this clause shall implement affirmative action procedures at

least as extensive as those prescribed in paragraph (g) of this clause, so as to achieve maximum results from its efforts to ensure equal employment opportunity. If the Contractor fails to comply with the requirements of Executive Order 11246, as amended, the implementing regulations, or this clause, the Deputy Assistant Secretary shall take action as prescribed in 41 CFR 60-4.8.

(n) The Contractor shall designate a responsible official to--

(1) Monitor all employment-related activity to ensure that the Contractor's equal employment policy is being carried out;

(2) Submit reports as may be required by the Government; and

(3) Keep records that shall at least include for each employee the name, address, telephone number, construction trade, union affiliation (if any), employee identification number, social security number, race, sex, status (e.g., mechanic, apprentice, trainee, helper, or laborer), dates of changes in status, hours worked per week in the indicated trade, rate of pay, and locations at which the work was performed. Records shall be maintained in an easily understandable and retrievable form; however, to the degree that existing records satisfy this requirement, separate records are not required to be maintained.

Nothing contained herein shall be construed as a limitation upon the application of other laws that establish different standards of compliance or upon the requirements for the hiring of local or other area residents (e.g., those under the Public Works Employment Act of 1977 and the Community Development Block Grant Program).

(End of clause)

52.222-36 AFFIRMATIVE ACTION FOR WORKERS WITH DISABILITIES (JUN 1998)

(a) General. (1) Regarding any position for which the employee or applicant for employment is qualified, the Contractor shall not discriminate against any employee or applicant because of physical or mental disability. The Contractor agrees to take affirmative action to employ, advance in employment, and otherwise treat qualified individuals with disabilities without discrimination based upon their physical or mental disability in all employment practices such as--

(i) Recruitment, advertising, and job application procedures;

(ii) Hiring, upgrading, promotion, award of tenure, demotion, transfer, layoff, termination, right of return from layoff, and rehiring;

(iii) Rates of pay or any other form of compensation and changes in compensation;

(iv) Job assignments, job classifications, organizational structures, position descriptions, lines of progression, and seniority lists;

(v) Leaves of absence, sick leave, or any other leave;

(vi) Fringe benefits available by virtue of employment, whether or not administered by the Contractor;

(vii) Selection and financial support for training, including apprenticeships, professional meetings, conferences, and other related activities, and selection for leaves of absence to pursue training;

(viii) Activities sponsored by the Contractor, including social or recreational programs; and

(ix) Any other term, condition, or privilege of employment.

(2) The Contractor agrees to comply with the rules, regulations, and relevant orders of the Secretary of Labor (Secretary) issued under the Rehabilitation Act of 1973 (29 U.S.C. 793) (the Act), as amended.

(b) Postings. (1) The Contractor agrees to post employment notices stating--

(i) The Contractor's obligation under the law to take affirmative action to employ and advance in employment qualified individuals with disabilities; and

(ii) The rights of applicants and employees.

(2) These notices shall be posted in conspicuous places that are available to employees and applicants for employment. The Contractor shall ensure that applicants and employees with disabilities are informed of the contents of the notice (e.g., the Contractor may have the notice read to a visually disabled individual, or may lower the posted notice so that it might be read by a person in a wheelchair). The notices shall be in a form prescribed by the Deputy Assistant Secretary for Federal Contract Compliance of the U.S. Department of Labor (Deputy Assistant Secretary) and shall be provided by or through the Contracting Officer.

(3) The Contractor shall notify each labor union or representative of workers with which it has a collective bargaining agreement or other contract understanding, that the Contractor is bound by the terms of Section 503 of the Act and is committed to take affirmative action to employ, and advance in employment, qualified individuals with physical or mental disabilities.

(c) Noncompliance. If the Contractor does not comply with the requirements of this clause, appropriate actions may be taken under the rules, regulations, and relevant orders of the Secretary issued pursuant to the Act.

(d) Subcontracts. The Contractor shall include the terms of this clause in every subcontract or purchase order in excess of $10,000 unless exempted by rules, regulations, or orders of the Secretary. The Contractor shall act as specified by the Deputy Assistant Secretary to enforce the terms, including action for noncompliance.

(End of clause)

52.223-3 HAZARDOUS MATERIAL IDENTIFICATION AND MATERIAL SAFETY DATA (JAN 1997)

(a) "Hazardous material", as used in this clause, includes any material defined as hazardous under the latest version of Federal Standard No. 313 (including revisions adopted during the term of the contract).

(b) The offeror must list any hazardous material, as defined in paragraph (a) of this clause, to be delivered under this contract. The hazardous material shall be properly identified and include any applicable identification number, such as National Stock Number or Special Item Number. This information shall also be included on the Material Safety Data Sheet submitted under this contract.

Material (If none, insert "None")	Identification No.
_____	_____
_____	_____
_____	_____

(c) This list must be updated during performance of the contract whenever the Contractor determines that any other material to be delivered under this contract is hazardous.

(d) The apparently successful offeror agrees to submit, for each item as required prior to award, a Material Safety Data Sheet, meeting the requirements of 29 CFR 1910.1200(g) and the latest version of Federal Standard No. 313, for all hazardous material identified in paragraph (b) of this clause. Data shall be submitted in accordance with Federal Standard No. 313, whether or not the apparently successful offeror is the actual manufacturer of these items. Failure to submit the Material Safety Data Sheet prior to award may result in the apparently successful offeror being considered nonresponsible and ineligible for award.

(e) If, after award, there is a change in the composition of the item(s) or a revision to Federal Standard No. 313, which renders incomplete or inaccurate the data submitted under paragraph (d) of this clause, the Contractor shall promptly notify the Contracting Officer and resubmit the data.

(f) Neither the requirements of this clause nor any act or failure to act by the Government shall relieve the Contractor of any responsibility or liability for the safety of Government, Contractor, or subcontractor personnel or property.

(g) Nothing contained in this clause shall relieve the Contractor from complying with applicable Federal, State, and local laws, codes, ordinances, and regulations (including the obtaining of licenses and permits) in connection with hazardous material.

(h) The Government's rights in data furnished under this contract with respect to hazardous material are as follows:

(1) To use, duplicate and disclose any data to which this clause is applicable. The purposes of this right are to--

(i) Apprise personnel of the hazards to which they may be exposed in using, handling, packaging, transporting, or disposing of hazardous materials;

(ii) Obtain medical treatment for those affected by the material; and

(iii) Have others use, duplicate, and disclose the data for the Government for these purposes.

(2) To use, duplicate, and disclose data furnished under this clause, in accordance with subparagraph (h)(1) of this clause, in precedence over any other clause of this contract providing for rights in data.

(3) The Government is not precluded from using similar or identical data acquired from other sources.

(End of clause)

52.223-6 DRUG-FREE WORKPLACE (MAY 2001)

(a) Definitions. As used in this clause --

"Controlled substance" means a controlled substance in schedules I through V of section 202 of the Controlled Substances Act (21 U.S.C. 812) and as further defined in regulation at 21 CFR 1308.11 - 1308.15.

"Conviction" means a finding of guilt (including a plea of nolo contendere) or imposition of sentence, or both, by any judicial body charged with the responsibility to deter- mine violations of the Federal or State criminal drug statutes.

"Criminal drug statute" means a Federal or non-Federal criminal statute involving the manufacture, distribution, dispensing, possession, or use of any controlled substance.

"Drug-free workplace" means the site(s) for the performance of work done by the Contractor in connection with a specific contract at which employees of the Contractor are prohibited from engaging in the unlawful manufacture, distribution, dispensing, possession, or use of a controlled substance.

"Employee" means an employee of a Contractor directly engaged in the performance of work under a Government contract. "Directly engaged" is defined to include all direct cost employees and any other Contractor employee who has other than a minimal impact or involvement in contract performance.

"Individual" means an offeror/contractor that has no more than one employee including the offeror/contractor.

(b) The Contractor, if other than an individual, shall-- within 30 days after award (unless a longer period is agreed to in writing for contracts of 30 days or more performance duration), or as soon as possible for contracts of less than 30 days performance duration--

(1) Publish a statement notifying its employees that the unlawful manufacture, distribution, dispensing, possession, or use of a controlled substance is prohibited in the Contractor's workplace and specifying the actions that will be taken against employees for violations of such prohibition;

(2) Establish an ongoing drug-free awareness program to inform such employees about--

(i) The dangers of drug abuse in the workplace;

(ii) The Contractor's policy of maintaining a drug-free workplace;

(iii) Any available drug counseling, rehabilitation, and employee assistance programs; and

(iv) The penalties that may be imposed upon employees for drug abuse violations occurring in the workplace;

(3) Provide all employees engaged in performance of the contract with a copy of the statement required by subparagraph (b)(1) of this clause;

(4) Notify such employees in writing in the statement required by subparagraph (b)(1) of this clause that, as a condition of continued employment on this contract, the employee will--

(i) Abide by the terms of the statement; and

(ii) Notify the employer in writing of the employee's conviction under a criminal drug statute for a violation occurring in the workplace no later than 5 days after such conviction.

(5) Notify the Contracting Officer in writing within 10 days after receiving notice under subdivision (b)(4)(ii) of this clause, from an employee or otherwise receiving actual notice of such conviction. The notice shall include the position title of the employee;

(6) Within 30 days after receiving notice under subdivision (b)(4)(ii) of this clause of a conviction, take one of the following actions with respect to any employee who is convicted of a drug abuse violation occurring in the workplace:

(i) Taking appropriate personnel action against such employee, up to and including termination; or

(ii) Require such employee to satisfactorily participate in a drug abuse assistance or rehabilitation program approved for such purposes by a Federal, State, or local health, law enforcement, or other appropriate agency; and

(7) Make a good faith effort to maintain a drug-free workplace through implementation of subparagraphs (b)(1) though (b)(6) of this clause.

(c) The Contractor, if an individual, agrees by award of the contract or acceptance of a purchase order, not to engage in the unlawful manufacture, distribution, dispensing, possession, or use of a controlled substance while performing this contract.

(d) In addition to other remedies available to the Government, the Contractor's failure to comply with the requirements of paragraph (b) or (c) of this clause may, pursuant to FAR 23.506, render the Contractor subject to suspension of contract payments, termination of the contract for default, and suspension or debarment.

(End of clause)

52.225-11 BUY AMERICAN ACT--CONSTRUCTION MATERIALS UNDER TRADE AGREEMENTS (JUL 2002)

(a) Definitions. As used in this clause--

Component means an article, material, or supply incorporated directly into a construction material.

Construction material means an article, material, or supply brought to the construction site by the Contractor or subcontractor for incorporation into the building or work. The term also includes an item brought to the site preassembled from articles, materials, or supplies. However, emergency life safety systems, such as emergency lighting, fire alarm, and audio evacuation systems, that are discrete systems incorporated into a public building or work and that are produced as complete systems, are evaluated as a single and distinct construction material regardless of when or how the individual parts or components of those systems are delivered to the construction site. Materials purchased directly by the Government are supplies, not construction material.

Cost of components means--

(1) For components purchased by the Contractor, the acquisition cost, including transportation costs to the place of incorporation into the construction material (whether or not such costs are paid to a domestic firm), and any applicable duty (whether or not a duty-free entry certificate is issued); or

(2) For components manufactured by the Contractor, all costs associated with the manufacture of the component, including transportation costs as described in paragraph (1) of this definition, plus allocable overhead costs, but excluding profit. Cost of components does not include any costs associated with the manufacture of the end product.

Designated country means any of the following countries: Aruba, Austria, Bangladesh, Belgium, Benin, Bhutan, Botswana, Burkina Faso, Burundi, Canada, Cape Verde, Central African Republic, Chad, Comoros, Denmark.

Djibouti, Equatorial Guinea, Finland, France, Gambia, Germany, Greece, Guinea, Guinea-Bissau, Haiti, Hong Kong, Ireland, Israel, Italy, Japan.

Kiribati, Korea, Republic of, Lesotho, Liechtenstein, Luxembourg, Malawi, Maldives, Mali, Mozambique, Nepal, Netherlands, Niger, Norway, Portugal, Rwanda.

Sao Tome and Principe, Sierra Leone, Singapore, Somalia, Spain, Sweden, Switzerland, Tanzania U.R., Togo, Tuvalu, Uganda, United Kingdom, Vanuatu, Western Samoa, Yemen.

Designated country construction material means a construction material that--

(1) Is wholly the growth, product, or manufacture of a designated country; or

(2) In the case of a construction material that consists in whole or in part of materials from another country, has been substantially transformed in a designated country into a new and different construction material distinct from the materials from which it was transformed.

Domestic construction material means--

(1) An unmanufactured construction material mined or produced in the United States; or

(2) A construction material manufactured in the United States, if the cost of its components mined, produced, or manufactured in the United States exceeds 50 percent of the cost of all its components. Components of foreign origin of the same class or kind for which nonavailability determinations have been made are treated as domestic.

Foreign construction material means a construction material other than a domestic construction material.

North American Free Trade Agreement country means Canada or Mexico.

North American Free Trade Agreement country construction material means a construction material that--

(1) Is wholly the growth, product, or manufacture of a North American Free Trade Agreement (NAFTA) country; or

(2) In the case of a construction material that consists in whole or in part of materials from another country, has been substantially transformed in a NAFTA country into a new and different construction material distinct from the materials from which it was transformed.

United States means the 50 States and the District of Columbia, U.S. territories and possessions, Puerto Rico, the Northern Mariana Islands, and any other place subject to U.S. jurisdiction, but does not include leased bases.

(b) Construction materials. (1) This clause implements the Buy American Act (41 U.S.C. 10a-10d) and the Balance of Payments Program by providing a preference for domestic construction material. In addition, the Contracting Officer has determined that the Trade Agreements Act and the North American Free Trade Agreement (NAFTA) apply to this acquisition. Therefore, the Buy American Act restrictions are waived for designated country and NAFTA country construction materials.

(2) The Contractor shall use only domestic, designated country, or NAFTA country construction material in performing this contract, except as provided in paragraphs (b)(3) and (b)(4) of this clause.

(3) The requirement in paragraph (b)(2) of this clause does not apply to the construction materials or components listed by the Government as follows: (Contracting Officer to list applicable excepted materials or indicate “none”)

(4) The Contracting Officer may add other foreign construction material to the list in paragraph (b)(3) of this clause if the Government determines that--

(i) The cost of domestic construction material would be unreasonable. The cost of a particular domestic construction material subject to the restrictions of the Buy American Act is unreasonable when the cost of such material exceeds the cost of foreign material by more than 6 percent;

(ii) The application of the restriction of the Buy American Act to a particular construction material would be impracticable or inconsistent with the public interest; or

(iii) The construction material is not mined, produced, or manufactured in the United States in sufficient and reasonably available commercial quantities of a satisfactory quality.

(c) Request for determination of inapplicability of the Buy American Act.

(1)(i) Any Contractor request to use foreign construction material in accordance with paragraph (b)(4) of this clause shall include adequate information for Government evaluation of the request, including--

(A) A description of the foreign and domestic construction materials;

(B) Unit of measure;

(C) Quantity;

(D) Price;

(E) Time of delivery or availability;

(F) Location of the construction project;

(G) Name and address of the proposed supplier; and

(H) A detailed justification of the reason for use of foreign construction materials cited in accordance with paragraph (b)(3) of this clause.

(ii) A request based on unreasonable cost shall include a reasonable survey of the market and a completed price comparison table in the format in paragraph (d) of this clause.

(iii) The price of construction material shall include all delivery costs to the construction site and any applicable duty (whether or not a duty-free certificate may be issued).

(iv) Any Contractor request for a determination submitted after contract award shall explain why the Contractor could not reasonably foresee the need for such determination and could not have requested the determination before contract award. If the Contractor does not submit a satisfactory explanation, the Contracting Officer need not make a determination.

(2) If the Government determines after contract award that an exception to the Buy American Act applies and the Contracting Officer and the Contractor negotiate adequate consideration, the Contracting Officer will modify the contract to allow use of the foreign construction material. However, when the basis for the exception is the unreasonable price of a domestic construction material, adequate consideration is not less than the differential established in paragraph (b)(4)(i) of this clause.

(3) Unless the Government determines that an exception to the Buy American Act applies, use of foreign construction material is noncompliant with the Buy American Act.

(d) Data. To permit evaluation of requests under paragraph (c) of this clause based on unreasonable cost, the Contractor shall include the following information and any applicable supporting data based on the survey of suppliers:

Foreign and Domestic Construction Materials Price Comparison

Construction material description	Unit of measure	Quantity	Price (dollars) \1\
Item 1:			
Foreign construction material....	.....	.....	.....
Domestic construction material...	.....	.....	.....
Item 2:			
Foreign construction material....	.....	.....	.....
Domestic construction material...	.....	.....	.....

\1\ Include all delivery costs to the construction site and any applicable duty (whether or not a duty-free entry certificate is issued).

List name, address, telephone number, and contact for suppliers surveyed. Attach copy of response; if oral, attach summary.

Include other applicable supporting information.

(End of clause)

52.225-13 RESTRICTIONS ON CERTAIN FOREIGN PURCHASES (JUL 2000)

(a) The Contractor shall not acquire, for use in the performance of this contract, any supplies or services originating from sources within, or that were located in or transported from or through, countries whose products are banned from importation into the United States under regulations of the Office of Foreign Assets Control, Department of the Treasury. Those countries are Cuba, Iran, Iraq, Libya, North Korea, Sudan, the territory of Afghanistan controlled by the Taliban, and Serbia (excluding the territory of Kosovo).

(b) The Contractor shall not acquire for use in the performance of this contract any supplies or services from entities controlled by the government of Iraq.

(c) The Contractor shall insert this clause, including this paragraph (c), in all subcontracts.

(End of clause)

52.226-1 UTILIZATION OF INDIAN ORGANIZATIONS AND INDIAN-OWNED ECONOMIC ENTERPRISES (JUN 2000)

(a) Definitions. As used in this clause:

"Indian" means any person who is a member of any Indian tribe, band, group, pueblo or community that is recognized by the Federal Government as eligible for services from the Bureau of Indian Affairs (BIA) in accordance with 25 U.S.C. 1452(c) and any ``Native" as defined in the Alaska Native Claims Settlement Act (43 U.S.C. 1601).

"Indian organization" means the governing body of any Indian tribe or entity established or recognized by the governing body of an Indian tribe for the purposes of 25 U.S.C., chapter 17.

"Indian-owned economic enterprise" means any Indian-owned (as determined by the Secretary of the Interior) commercial, industrial, or business activity established or organized for the purpose of profit, provided that Indian ownership constitutea not less than 51 percent of the enterprise.

"Indian tribe" means any Indian tribe, band, group, pueblo or community, including native villages and native groups (including corporations organized by Kenai, Juneau, Sitka, and Kodiak) as defined in the Alaska Native Claims Settlement Act, that is recognized by the Federal Government as eligible for services from BIA in accordance with 25 U.S.C. 1542(c).

"Interested party" means a prime contractor or an actual or prospective offeror whose direct economic interest would be affected by the award of a subcontract or by the failure to award a subcontract.

(b) The Contractor shall use its best efforts to give Indian organizations and Indian-owned economic enterprises (25 U.S.C. 1544) the maximum practicable opportunity to participate in the subcontracts it awards to the fullest extent consistent with efficient performance of its contract.

(1) The Contracting Officer and the Contractor, acting in good faith, may rely on the representation of an Indian organization or Indian-owned economic enterprise as to its eligibility, unless an interested party challenges its status or the Contracting Officer has independent reason to question that status. In the event of a challenge to the representation of a subcontractor, the Contracting Officer will refer the matter to the U.S. Department of the Interior, Bureau of Indian Affairs (BIA), Attn: Chief, Division of Contracting and Grants Administration, 1849 C Street, NW., MS 2626-MIB, Washington, DC 20240-4000.

The BIA will determine the eligibility and notify the Contracting Officer. No incentive payment will be made within 50 working days of subcontract award or while a challenge is pending. If a subcontractor is determined to be an ineligible participant, no incentive payment will be made under the Indian Incentive Program.

(2) The Contractor may request an adjustment under the Indian Incentive Program to the following:

(i) The estimated cost of a cost-type contract.

(ii) The target cost of a cost-plus-incentive-fee prime contract.

(iii) The target cost and ceiling price of a fixed-price incentive prime contract.

(iv) The price of a firm-fixed-price prime contract.

(3) The amount of the adjustment to the prime contract is 5 percent of the estimated cost, target cost, or firm-fixed-price included in the subcontract initially awarded to the Indian organization or Indian-owned economic enterprise.

(4) The Contractor has the burden of proving the amount claimed and must assert its request for an adjustment prior to completion of contract performance.

(c) The Contracting Officer, subject to the terms and conditions of the contract and the availability of funds, will authorize an incentive payment of 5 percent of the amount paid to the subcontractor. The Contracting Officer will seek funding in accordance with agency procedures.

(End of clause)

52.227-1 AUTHORIZATION AND CONSENT (JUL 1995)

(a) The Government authorizes and consents to all use and manufacture, in performing this contract or any subcontract at any tier, of any invention described in and covered by a United States patent (1) embodied in the structure or composition of any article the delivery of which is accepted by the Government under this contract or (2) used in machinery, tools, or methods whose use necessarily results from compliance by the Contractor or a subcontractor with (i) specifications or written provisions forming a part of this contract or (ii) specific written instructions given by the Contracting Officer directing the manner of performance. The entire liability to the Government for infringement of a patent of the United States shall be determined solely by the provisions of the indemnity clause, if any, included in this contract or any subcontract hereunder (including any lower-tier subcontract), and the Government assumes liability for all other infringement to the extent of the authorization and consent hereinabove granted.

(b) The Contractor agrees to include, and require inclusion of, this clause, suitably modified to identify the parties, in all subcontracts at any tier for supplies or services (including construction, architect-engineer services, and materials, supplies, models, samples, and design or testing services expected to exceed the simplified acquisition threshold (however, omission of this clause from any subcontract, including those at or below the simplified acquisition threshold, does not affect this authorization and consent.)

(End of clause)

52.227-4 PATENT INDEMNITY--CONSTRUCTION CONTRACTS (APR 1984)

Except as otherwise provided, the Contractor agrees to indemnify the Government and its officers, agents, and employees against liability, including costs and expenses, for infringement upon any United States patent (except a patent issued upon an application that is now or may hereafter be withheld from issue pursuant to a Secrecy Order under 35 U.S.C. 181) arising out of performing this contract or out of the use or disposal by or for the account of the Government of supplies furnished or work performed under this contract.

(End of clause)

52.228-2 ADDITIONAL BOND SECURITY (OCT 1997)

The Contractor shall promptly furnish additional security required to protect the Government and persons supplying labor or materials under this contract if--

(a) Any surety upon any bond, or issuing financial institution for other security, furnished with this contract becomes unacceptable to the Government.

(b) Any surety fails to furnish reports on its financial condition as required by the Government;

(c) The contract price is increased so that the penal sum of any bond becomes inadequate in the opinion of the Contracting Officer; or

(d) An irrevocable letter of credit (ILC) used as security will expire before the end of the period of required security. If the Contractor does not furnish an acceptable extension or replacement ILC, or other acceptable substitute, at least 30 days before an ILC's scheduled expiration, the Contracting officer has the right to immediately draw on the ILC.

(End of clause)

52.228-5 INSURANCE--WORK ON A GOVERNMENT INSTALLATION (JAN 1997)

(a) The Contractor shall, at its own expense, provide and maintain during the entire performance of this contract, at least the kinds and minimum amounts of insurance required in the Schedule or elsewhere in the contract.

(b) Before commencing work under this contract, the Contractor shall notify the Contracting Officer in writing that the required insurance has been obtained. The policies evidencing required insurance shall contain an endorsement to the effect that any cancellation or any material change adversely affecting the Government's interest shall not be effective (1) for such period as the laws of the State in which this contract is to be performed prescribe, or (2) until 30 days after the insurer or the Contractor gives written notice to the Contracting Officer, whichever period is longer.

(c) The Contractor shall insert the substance of this clause, including this paragraph (c), in subcontracts under this contract that require work on a Government installation and shall require subcontractors to provide and maintain the insurance required in the Schedule or elsewhere in the contract. The Contractor shall maintain a copy of all subcontractors' proofs of required insurance, and shall make copies available to the Contracting Officer upon request.

(End of clause)

52.228-11 PLEDGES OF ASSETS (FEB 1992)

(a) Offerors shall obtain from each person acting as an individual surety on a bid guarantee, a performance bond, or a payment bond--

(1) Pledge of assets; and

(2) Standard Form 28, Affidavit of Individual Surety.

(b) Pledges of assets from each person acting as an individual surety shall be in the form of--

(1) Evidence of an escrow account containing cash, certificates of deposit, commercial or Government securities, or other assets described in FAR 28.203-2 (except see 28.203-2(b)(2) with respect to Government securities held in book entry form) and/or;

(2) A recorded lien on real estate. The offeror will be required to provide--

(i) Evidence of title in the form of a certificate of title prepared by a title insurance company approved by the United States Department of Justice. This title evidence must show fee simple title vested in the surety along with any concurrent owners; whether any real estate taxes are due and payable; and any recorded encumbrances against the property, including the lien filed in favor of the Government as required by FAR 28.203-3(d);

(ii) Evidence of the amount due under any encumbrance shown in the evidence of title;

(iii) A copy of the current real estate tax assessment of the property or a current appraisal dated no earlier than 6 months prior to the date of the bond, prepared by a professional appraiser who certifies that the appraisal has been conducted in accordance with the generally accepted appraisal standards as reflected in the Uniform Standards of Professional Appraisal Practice, as promulgated by the Appraisal Foundation.

(End of clause)

52.228-12 PROSPECTIVE SUBCONTRACTOR REQUESTS FOR BONDS. (OCT 1995)

In accordance with Section 806(a)(3) of Pub. L. 102-190, as amended by Sections 2091 and 8105 of Pub. L. 103-355, upon the request of a prospective subcontractor or supplier offering to furnish labor or material for the performance of this contract for which a payment bond has been furnished to the Government pursuant to the Miller Act, the Contractor shall promptly provide a copy of such payment bond to the requester.

(End of clause)

52.228-13 ALTERNATIVE PAYMENT PROTECTIONS (JULY 2000)

(a) The Contractor shall submit one of the following payment protections:

Payment bond & Performance Bonds
Irrevocable letter of credit

(b) The amount of the payment protection shall be 100 percent of the contract price.

(c) The submission of the payment protection is required within 10 days of contract award.

(d) The payment protection shall provide protection for the full contract performance period plus a one-year period.

(e) Except for escrow agreements and payment bonds, which provide their own protection procedures, the Contracting Officer is authorized to access funds under the payment protection when it has been alleged in writing by a supplier of labor or material that a nonpayment has occurred, and to withhold such funds pending resolution by administrative or judicial proceedings or mutual agreement of the parties.

(f) When a tripartite escrow agreement is used, the Contractor shall utilize only suppliers of labor and material that signed the escrow agreement.

(End of clause)

52.228-14 IRREVOCABLE LETTER OF CREDIT (DEC 1999)

(a) “Irrevocable letter of credit” (ILC), as used in this clause, means a written commitment by a federally insured financial institution to pay all or part of a stated amount of money, until the expiration date of the letter, upon presentation by the Government (the beneficiary) of a written demand therefor. Neither the financial institution nor the offeror/Contractor can revoke or condition the letter of credit.

(b) If the offeror intends to use an ILC in lieu of a bid bond, or to secure other types of bonds such as performance and payment bonds, the letter of credit and letter of confirmation formats in paragraphs (e) and (f) of this clause shall be used.

(c) The letter of credit shall be irrevocable, shall require presentation of no document other than a written demand and the ILC (including confirming letter, if any), shall be issued/confirmed by an acceptable federally insured financial institution as provided in paragraph (d) of this clause, and--

(1) If used as a bid guarantee, the ILC shall expire no earlier than 60 days after the close of the bid acceptance period;

(2) If used as an alternative to corporate or individual sureties as security for a performance or payment bond, the offeror/Contractor may submit an ILC with an initial expiration date estimated to cover the entire period for which financial security is required or may submit an ILC with an initial expiration date that is a minimum period of one year from the date of issuance. The ILC shall provide that, unless the issuer provides the beneficiary written notice of non-renewal at least 60 days in advance of the current expiration date, the ILC is automatically extended without amendment for one year from the expiration date, or any future expiration date, until the period of required coverage is completed and the Contracting Officer provides the financial institution with a written statement waiving the right to payment. The period of required coverage shall be:

(i) For contracts subject to the Miller Act, the later of--

(A) One year following the expected date of final payment;

(B) For performance bonds only, until completion of any warranty period; or

(C) For payment bonds only, until resolution of all claims filed against the payment bond during the one-year period following final payment.

(ii) For contracts not subject to the Miller Act, the later of--

(A) 90 days following final payment; or

(B) For performance bonds only, until completion of any warranty period.

(d) Only federally insured financial institutions rated investment grade or higher shall issue or confirm the ILC. The offeror/Contractor shall provide the Contracting Officer a credit rating that indicates the financial institution has the required rating(s) as of the date of issuance of the ILC. Unless the financial institution issuing the ILC had letter of credit business of less than $25 million in the past year, ILCs over $5 million must be confirmed by another acceptable financial institution that had letter of credit business of less than $25 million in the past year.

(e) The following format shall be used by the issuing financial institution to create an ILC:

_____

[Issuing Financial Institution's Letterhead or Name and Address]

Issue Date _____

IRREVOCABLE LETTER OF CREDIT NO. _____

Account party's name _____

Account party's address _____

For Solicitation No. _____(for reference only)

TO: [U.S. Government agency]

[U.S. Government agency's address]

1. We hereby establish this irrevocable and transferable Letter of Credit in your favor for one or more drawings up to United States $_____. This Letter of Credit is payable at [issuing financial institution's and, if any, confirming financial institution's] office at [issuing financial institution's address and, if any, confirming financial institution's address] and expires with our close of business on _____, or any automatically extended expiration date.

2. We hereby undertake to honor your or the transferee's sight draft(s) drawn on the issuing or, if any, the confirming financial institution, for all or any part of this credit if presented with this Letter of Credit and confirmation, if any, at the office specified in paragraph 1 of this Letter of Credit on or before the expiration date or any automatically extended expiration date.

3. [This paragraph is omitted if used as a bid guarantee, and subsequent paragraphs are renumbered.] It is a condition of this Letter of Credit that it is deemed to be automatically extended without amendment for one year from the expiration date hereof, or any future expiration date, unless at least 60 days prior to any expiration date, we notify you or the transferee by registered mail, or other receipted means of delivery, that we elect not to consider this Letter of Credit renewed for any such additional period. At the time we notify you, we also agree to notify the account party (and confirming financial institution, if any) by the same means of delivery.

4. This Letter of Credit is transferable. Transfers and assignments of proceeds are to be effected without charge to either the beneficiary or the transferee/assignee of proceeds. Such transfer or assignment shall be only at the written direction of the Government (the beneficiary) in a form satisfactory to the issuing financial institution and the confirming financial institution, if any.

5. This Letter of Credit is subject to the Uniform Customs and Practice (UCP) for Documentary Credits, 1993 Revision, International Chamber of Commerce Publication No. 500, and to the extent not inconsistent therewith, to the laws of _____ [state of confirming financial institution, if any, otherwise state of issuing financial institution].

6. If this credit expires during an interruption of business of this financial institution as described in Article 17 of the UCP, the financial institution specifically agrees to effect payment if this credit is drawn against within 30 days after the resumption of our business.

Sincerely,

_____

[Issuing financial institution]

(f) The following format shall be used by the financial institution to confirm an ILC:

_____
[Confirming Financial Institution's Letterhead or Name and Address]

(Date) _____

Our Letter of Credit Advice Number _____

Beneficiary: _____ [U.S. Government agency]

Issuing Financial Institution: _____

Issuing Financial Institution's LC No.: _____

Gentlemen:

1. We hereby confirm the above indicated Letter of Credit, the original of which is attached, issued by _____ [name of issuing financial institution] for drawings of up to United States dollars _____/U.S. $_____ and expiring with our close of business on _____ [the expiration date], or any automatically extended expiration date.

2. Draft(s) drawn under the Letter of Credit and this Confirmation are payable at our office located at _____.

3. We hereby undertake to honor sight draft(s) drawn under and presented with the Letter of Credit and this Confirmation at our offices as specified herein.

4. [This paragraph is omitted if used as a bid guarantee, and subsequent paragraphs are renumbered.] It is a condition of this confirmation that it be deemed automatically extended without amendment for one year from the expiration date hereof, or any automatically extended expiration date, unless:

(a) At least 60 days prior to any such expiration date, we shall notify the Contracting Officer, or the transferee and the issuing financial institution, by registered mail or other receipted means of delivery, that we elect not to consider

this confirmation extended for any such additional period; or

(b) The issuing financial institution shall have exercised its right to notify you or the transferee, the account party, and ourselves, of its election not to extend the expiration date of the Letter of Credit.

5. This confirmation is subject to the Uniform Customs and Practice (UCP) for Documentary Credits, 1993 Revision, International Chamber of Commerce Publication No. 500, and to the extent not inconsistent therewith, to the laws of _____ [state of confirming financial institution].

6. If this confirmation expires during an interruption of business of this financial institution as described in Article 17 of the UCP, we specifically agree to effect payment if this credit is drawn against within 30 days after the resumption of our business.

Sincerely,

_____

[Confirming financial institution]

(g) The following format shall be used by the Contracting Officer for a sight draft to draw on the Letter of Credit:

SIGHT DRAFT

_____

[City, State]

(Date) _____

[Name and address of financial institution]

Pay to the order of _____ [Beneficiary Agency] _____ the sum of United States $_____.
This draft is drawn under Irrevocable Letter of Credit No. _____.

_____

[Beneficiary Agency]

By: _____

(End of clause)

52.228-15 PERFORMANCE AND PAYMENT BONDS--CONSTRUCTION (JUL 2000)-

(a) Definitions. As used in this clause--

Original contract price means the award price of the contract; or, for requirements contracts, the price payable for the estimated total quantity; or, for indefinite-quantity contracts, the price payable for the specified minimum quantity. Original contract price does not include the price of any options, except those options exercised at the time of contract award.

(b) Amount of required bonds. Unless the resulting contract price is $100,000 or less, the successful offeror shall furnish performance and payment bonds to the Contracting Officer as follows:

(1) Performance bonds (Standard Form 25). The penal amount of performance bonds at the time of contract award shall be 100 percent of the original contract price.

(2) Payment Bonds (Standard Form 25-A). The penal amount of payment bonds at the time of contract award shall be 100 percent of the original contract price.

(3) Additional bond protection. (i) The Government may require additional performance and payment bond protection if the contract price is increased. The increase in protection generally will equal 100 percent of the increase in contract price.

(ii) The Government may secure the additional protection by directing the Contractor to increase the penal amount of the existing bond or to obtain an additional bond.

(c) Furnishing executed bonds. The Contractor shall furnish all executed bonds, including any necessary reinsurance agreements, to the Contracting Officer, within the time period specified in the Bid Guarantee provision of the solicitation, or otherwise specified by the Contracting Officer, but in any event, before starting work.

(d) Surety or other security for bonds. The bonds shall be in the form of firm commitment, supported by corporate sureties whose names appear on the list contained in Treasury Department Circular 570, individual sureties, or by other acceptable security such as postal money order, certified check, cashier's check, irrevocable letter of credit, or, in accordance with Treasury Department regulations, certain bonds or notes of the United States. Treasury Circular 570 is published in the Federal Register or may be obtained from the U.S. Department of Treasury, Financial Management Service, Surety Bond Branch, 401 14th Street, NW, 2nd Floor, West Wing, Washington, DC 20227.

(e) Notice of subcontractor waiver of protection (40 U.S.C. 270b(c). Any waiver of the right to sue on the payment bond is void unless it is in writing, signed by the person whose right is waived, and executed after such person has first furnished labor or material for use in the performance of the contract.

(End of clause)

52.229-3 FEDERAL, STATE, AND LOCAL TAXES (JAN 1991)

(a) "Contract date," as used in this clause, means the date set for bid opening or, if this is a negotiated contract or a modification, the effective date of this contract or modification.

"All applicable Federal, State, and local taxes and duties," as used in this clause, means all taxes and duties, in effect on the contract date, that the taxing authority is imposing and collecting on the transactions or property covered by this contract.

"After-imposed Federal tax," as used in this clause, means any new or increased Federal excise tax or duty, or tax that was exempted or excluded on the contract date but whose exemption was later revoked or reduced during the contract period, on the transactions or property covered by this contract that the Contractor is required to pay or bear as the result of legislative, judicial, or administrative action taking effect after the contract date. It does not include social security tax or other employment taxes.
"After-relieved Federal tax," as used in this clause, means any amount of Federal excise tax or duty, except social security or other employment taxes, that would otherwise have been payable on the transactions or property covered by this contract, but which the Contractor is not required to pay or bear, or for which the Contractor obtains a refund or drawback, as the result of legislative, judicial, or administrative action taking effect after the contract date.

(b) The contract price includes all applicable Federal, State, and local taxes and duties.

(c) The contract price shall be increased by the amount of any after-imposed Federal tax, provided the Contractor warrants in writing that no amount for such newly imposed Federal excise tax or duty or rate increase was included in the contract price, as a contingency reserve or otherwise.

(d) The contract price shall be decreased by the amount of any after-relieved Federal tax.

(e) The contract price shall be decreased by the amount of any Federal excise tax or duty, except social security or other employment taxes, that the Contractor is required to pay or bear, or does not obtain a refund of, through the Contractor's fault, negligence, or failure to follow instructions of the Contracting Officer.

(f) No adjustment shall be made in the contract price under this clause unless the amount of the adjustment exceeds $250.

(g) The Contractor shall promptly notify the Contracting Officer of all matters relating to any Federal excise tax or duty that reasonably may be expected to result in either an increase or decrease in the contract price and shall take appropriate action as the Contracting Officer directs.

(h) The Government shall, without liability, furnish evidence appropriate to establish exemption from any Federal, State, or local tax when the Contractor requests such evidence and a reasonable basis exists to sustain the exemption.

(End of clause)

52.229-5 TAXES--CONTRACTS PERFORMED IN U.S. POSSESSIONS OR PUERTO RICO (APR 1984)

The term "local taxes," as used in the Federal, State, and local taxes clause of this contract, includes taxes imposed by a possession of the United States or by Puerto Rico.

(End of clause)

52.232-5 PAYMENTS UNDER FIXED-PRICE CONSTRUCTION CONTRACTS (SEP 2002)

(a) Payment of price. The Government shall pay the Contractor the contract price as provided in this contract.

(b) Progress payments. The Government shall make progress payments monthly as the work proceeds, or at more frequent intervals as determined by the Contracting Officer, on estimates of work accomplished which meets the standards of quality established under the contract, as approved by the Contracting Officer.

(1) The Contractor's request for progress payments shall include the following substantiation:

(i) An itemization of the amounts requested, related to the various elements of work required by the contract covered by the payment requested.

(ii) A listing of the amount included for work performed by each subcontractor under the contract.

(iii) A listing of the total amount of each subcontract under the contract.

(iv) A listing of the amounts previously paid to each such subcontractor under the contract.

(v) Additional supporting data in a form and detail required by the Contracting Officer.

(2) In the preparation of estimates, the Contracting Officer may authorize material delivered on the site and preparatory work done to be taken into consideration. Material delivered to the Contractor at locations other than the

site also may be taken into consideration if--

(i) Consideration is specifically authorized by this contract; and

(ii) The Contractor furnishes satisfactory evidence that it has acquired title to such material and that the material will be used to perform this contract.

(c) Contractor certification. Along with each request for progress payments, the Contractor shall furnish the following certification, or payment shall not be made: (However, if the Contractor elects to delete paragraph (c)(4) from the certification, the certification is still acceptable.)

I hereby certify, to the best of my knowledge and belief, that--

(1) The amounts requested are only for performance in accordance with the specifications, terms, and conditions of the contract;

(2) All payments due to subcontractors and suppliers from previous payments received under the contract have been made, and timely payments will be made from the proceeds of the payment covered by this certification, in accordance with subcontract agreements and the requirements of chapter 39 of Title 31, United States Code;

(3) This request for progress payments does not include any amounts which the prime contractor intends to withhold or retain from a subcontractor or supplier in accordance with the terms and conditions of the subcontract; and

(4) This certification is not to be construed as final acceptance of a subcontractor's performance.

_____

(Name)

_____

(Title)

_____

(Date)

(d) Refund of unearned amounts. If the Contractor, after making a certified request for progress payments, discovers that a portion or all of such request constitutes a payment for performance by the Contractor that fails to conform to the specifications, terms, and conditions of this contract (hereinafter referred to as the "unearned amount"), the Contractor shall--

(1) Notify the Contracting Officer of such performance deficiency; and

(2) Be obligated to pay the Government an amount (computed by the Contracting Officer in the manner provided in paragraph (j) of this clause) equal to interest on the unearned amount from the 8th day after the date of receipt of the unearned amount until--

(i) The date the Contractor notifies the Contracting Officer that the performance deficiency has been corrected; or

(ii) The date the Contractor reduces the amount of any subsequent certified request for progress payments by an amount equal to the unearned amount.

(e) Retainage. If the Contracting Officer finds that satisfactory progress was achieved during any period for which a

progress payment is to be made, the Contracting Officer shall authorize payment to be made in full. However, if satisfactory progress has not been made, the Contracting Officer may retain a maximum of 10 percent of the amount of the payment until satisfactory progress is achieved. When the work is substantially complete, the Contracting Officer may retain from previously withheld funds and future progress payments that amount the Contracting Officer considers adequate for protection of the Government and shall release to the Contractor all the remaining withheld funds. Also, on completion and acceptance of each separate building, public work, or other division of the contract, for which the price is stated separately in the contract, payment shall be made for the completed work without retention of a percentage.

(f) Title, liability, and reservation of rights. All material and work covered by progress payments made shall, at the time of payment, become the sole property of the Government, but this shall not be construed as--

(1) Relieving the Contractor from the sole responsibility for all material and work upon which payments have been made or the restoration of any damaged work; or

(2) Waiving the right of the Government to require the fulfillment of all of the terms of the contract.

(g) Reimbursement for bond premiums. In making these progress payments, the Government shall, upon request, reimburse the Contractor for the amount of premiums paid for performance and payment bonds (including coinsurance and reinsurance agreements, when applicable) after the Contractor has furnished evidence of full payment to the surety. The retainage provisions in paragraph (e) of this clause shall not apply to that portion of progress payments attributable to bond premiums.

(h) Final payment. The Government shall pay the amount due the Contractor under this contract after--

(1) Completion and acceptance of all work;

(2) Presentation of a properly executed voucher; and

(3) Presentation of release of all claims against
the Government arising by virtue of this contract, other than claims, in stated amounts, that the Contractor has specifically excepted from the operation of the release. A release may also be required of the assignee if the Contractor's claim to amounts payable under this contract has been assigned under the Assignment of Claims Act of 1940 (31 U.S.C. 3727 and 41 U.S.C. 15).

(i) Limitation because of undefinitized work. Notwithstanding any provision of this contract, progress payments shall not exceed 80 percent on work accomplished on undefinitized contract actions. A "contract action" is any action resulting in a contract, as defined in FAR Subpart 2.1, including contract modifications for additional supplies or services, but not including contract modifications that are within the scope and under the terms of the contract, such as contract modifications issued pursuant to the Changes clause, or funding and other administrative changes.

(j) Interest computation on unearned amounts. In accordance with 31 U.S.C. 3903(c)(1), the amount payable under subparagraph (d)(2) of this clause shall be--

(1) Computed at the rate of average bond equivalent rates of 91-day Treasury bills auctioned at the most recent auction of such bills prior to the date the Contractor receives the unearned amount; and

(2) Deducted from the next available payment to the Contractor.

(End of clause)

52.232-17 INTEREST (JUNE 1996)

(a) Except as otherwise provided in this contract under a Price Reduction for Defective Cost or Pricing Data clause or a Cost Accounting Standards clause, all amounts that become payable by the Contractor to the Government under this contract (net of any applicable tax credit under the Internal Revenue Code (26 U.S.C. 1481)) shall bear simple interest from the date due until paid unless paid within 30 days of becoming due. The interest rate shall be the interest rate established by the Secretary of the Treasury as provided in Section 12 of the Contract Disputes Act of 1978 (Public Law 95-563), which is applicable to the period in which the amount becomes due, as provided in paragraph (b) of this clause, and then at the rate applicable for each six-month period as fixed by the Secretary until the amount is paid. reproduce, prepare derivative works, distribute copies to the public, and (b) Amounts shall be due at the earliest of the following dates:

(1) The date fixed under this contract.

(2) The date of the first written demand for payment consistent with this contract, including any demand resulting from a default termination.

(3) The date the Government transmits to the Contractor a proposed supplemental agreement to confirm completed negotiations establishing the amount of debt.

(4) If this contract provides for revision of prices, the date of written notice to the Contractor stating the amount of refund payable in connection with a pricing proposal or a negotiated pricing agreement not confirmed by contract modification.

(c) The interest charge made under this clause may be reduced under the procedures prescribed in 32.614-2 of the Federal Acquisition Regulation in effect on the date of this contract.

(End of clause)

52.232-23 ASSIGNMENT OF CLAIMS (JAN 1986)

(a) The Contractor, under the Assignment of Claims Act, as amended, 31 U.S.C. 3727, 41 U.S.C. 15 (hereafter referred to as "the Act"), may assign its rights to be paid amounts due or to become due as a result of the performance of this contract to a bank, trust company, or other financing institution, including any Federal lending agency. The assignee under such an assignment may thereafter further assign or reassign its right under the original assignment to any type of financing institution described in the preceding sentence.

(b) Any assignment or reassignment authorized under the Act and this clause shall cover all unpaid amounts payable under this contract, and shall not be made to more than one party, except that an assignment or reassignment may be made to one party as agent or trustee for two or more parties participating in the financing of this contract.

(c) The Contractor shall not furnish or disclose to any assignee under this contract any classified document (including this contract) or information related to work under this contract until the Contracting Officer authorizes such action in writing.

(End of clause)

52.232-33 PAYMENT BY ELECTRONIC FUNDS TRANSFER—CENTRAL CONTRACTOR REGISTRATION (MAY 1999)

(a) Method of payment. (1) All payments by the Government under this contract shall be made by electronic funds transfer (EFT), except as provided in paragraph (a)(2) of this clause. As used in this clause, the term “EFT” refers to the funds transfer and may also include the payment information transfer.

(2) In the event the Government is unable to release one or more payments by EFT, the Contractor agrees to either--

(i) Accept payment by check or some other mutually agreeable method of payment; or

(ii) Request the Government to extend the payment due date until such time as the Government can make payment by EFT (but see paragraph (d) of this clause).

(b) Contractor's EFT information. The Government shall make payment to the Contractor using the EFT information contained in the Central Contractor Registration (CCR) database. In the event that the EFT information changes, the Contractor shall be responsible for providing the updated information to the CCR database.

(c) Mechanisms for EFT payment. The Government may make payment by EFT through either the Automated Clearing House (ACH) network, subject to the rules of the National Automated Clearing House Association, or the Fedwire Transfer System. The rules governing Federal payments through the ACH are contained in 31 CFR part 210.

(d) Suspension of payment. If the Contractor's EFT information in the CCR database is incorrect, then the Government need not make payment to the Contractor under this contract until correct EFT information is entered into the CCR database; and any invoice or contract financing request shall be deemed not to be a proper invoice for the purpose of prompt payment under this contract. The prompt payment terms of the contract regarding notice of an improper invoice and delays in accrual of interest penalties apply.

(e) Contractor EFT arrangements. If the Contractor has identified multiple payment receiving points (i.e., more than one remittance address and/or EFT information set) in the CCR database, and the Contractor has not notified the Government of the payment receiving point applicable to this contract, the Government shall make payment to the first payment receiving point (EFT information set or remittance address as applicable) listed in the CCR database.

(f) Liability for uncompleted or erroneous transfers. (1) If an uncompleted or erroneous transfer occurs because the Government used the Contractor's EFT information incorrectly, the Government remains responsible for--

(i) Making a correct payment;

(ii) Paying any prompt payment penalty due; and

(iii) Recovering any erroneously directed funds.

(2) If an uncompleted or erroneous transfer occurs because the Contractor's EFT information was incorrect, or was revised within 30 days of Government release of the EFT payment transaction instruction to the Federal Reserve System, and--

(i) If the funds are no longer under the control of the payment office, the Government is deemed to have made payment and the Contractor is responsible for recovery of any erroneously directed funds; or

(ii) If the funds remain under the control of the payment office, the Government shall not make payment, and the provisions of paragraph (d) of this clause shall apply.

(g) EFT and prompt payment. A payment shall be deemed to have been made in a timely manner in accordance with the prompt payment terms of this contract if, in the EFT payment transaction instruction released to the Federal Reserve System, the date specified for settlement of the payment is on or before the prompt payment due date, provided the specified payment date is a valid date under the rules of the Federal Reserve System.

(h) EFT and assignment of claims. If the Contractor assigns the proceeds of this contract as provided for in the assignment of claims terms of this contract, the Contractor shall require as a condition of any such assignment, that the assignee shall register in the CCR database and shall be paid by EFT in accordance with the terms of this clause. In all respects, the requirements of this clause shall apply to the assignee as if it were the Contractor. EFT information that shows the ultimate recipient of the transfer to be other than the Contractor, in the absence of a proper assignment of claims acceptable to the Government, is incorrect EFT information within the meaning of paragraph (d) of this clause.

(i) Liability for change of EFT information by financial agent. The Government is not liable for errors resulting from changes to EFT information made by the Contractor's financial agent.

(j) Payment information. The payment or disbursing office shall forward to the Contractor available payment information that is suitable for transmission as of the date of release of the EFT instruction to the Federal Reserve System. The Government may request the Contractor to designate a desired format and method(s) for delivery of payment information from a list of formats and methods the payment office is capable of executing. However, the Government does not guarantee that any particular format or method of delivery is available at any particular payment office and retains the latitude to use the format and delivery method most convenient to the Government. If the Government makes payment by check in accordance with paragraph (a) of this clause, the Government shall mail the payment information to the remittance address contained in the CCR database.

(End of Clause)

52.236-1 PERFORMANCE OF WORK BY THE CONTRACTOR (APR 1984)

The Contractor shall perform on the site, and with its own organization, work equivalent to at least **thirty percent** of the total amount of work to be performed under the contract. This percentage may be reduced by a supplemental agreement to this contract if, during performing the work, the Contractor requests a reduction and the Contracting Officer determines that the reduction would be to the advantage of the Government.

(End of clause)

52.236-2 DIFFERING SITE CONDITIONS (APR 1984)

As prescribed in 36.502, insert the following clause in solicitations and contracts when a fixed-price construction contract or a fixed-price dismantling, demolition, or removal of improvements contract is contemplated and the contract amount is expected to exceed the small purchase limitation. The Contracting Officer may insert the clause in solicitations and contracts when a fixed-price construction or a fixed-price contract for dismantling, demolition, or removal of improvements is contemplated and the contract amount is expected to be within the small purchase limitation.

(a) The Contractor shall promptly, and before the conditions are disturbed, give a written notice to the Contracting Officer of

(1) subsurface or latent physical conditions at the site which differ materially from those indicated in this contract, or

(2) unknown physical conditions at the site, of an unusual nature, which differ materially from those ordinarily encountered and generally recognized as inhering in work of the character provided for in the contract.

(b) The Contracting Officer shall investigate the site conditions promptly after receiving the notice. If the conditions

do materially so differ and cause an increase or decrease in the Contractor's cost of, or the time required for, performing any part of the work under this contract, whether or not changed as a result of the conditions, an equitable adjustment shall be made under this clause and the contract modified in writing accordingly.

(c) No request by the Contractor for an equitable adjustment to the contract under this clause shall be allowed, unless the Contractor has given the written notice required; provided, that the time prescribed in (a) above for giving written notice may be extended by the Contracting Officer.

(d) No request by the Contractor for an equitable adjustment to the contract for differing site conditions shall be allowed if made after final payment under this contract.

(End of clause)

52.236-3 SITE INVESTIGATION AND CONDITIONS AFFECTING THE WORK (APR 1984)

(a) The Contractor acknowledges that it has taken steps reasonably necessary to ascertain the nature and location of the work, and that it has investigated and satisfied itself as to the general and local conditions which can affect the work or its cost, including but not limited to

(1) conditions bearing upon transportation, disposal, handling, and storage of materials;

(2) the availability of labor, water, electric power, and roads;

(3) uncertainties of weather, river stages, tides, or similar physical conditions at the site;

(4) the conformation and conditions of the ground; and (5) the character of equipment and facilities needed preliminary to and during work performance. The Contractor also acknowledges that it has satisfied itself as to the character, quality, and quantity of surface and subsurface materials or obstacles to be encountered insofar as this information is reasonably ascertainable from an inspection of the site, including all exploratory work done by the Government, as well as from the drawings and specifications made a part of this contract. Any failure of the Contractor to take the actions described and acknowledged in this paragraph will not relieve the Contractor from responsibility for estimating properly the difficulty and cost of successfully performing the work, or for proceeding to successfully perform the work without additional expense to the Government.

(b) The Government assumes no responsibility for any conclusions or interpretations made by the Contractor based on the information made available by the Government. Nor does the Government assume responsibility for any understanding reached or representation made concerning conditions which can affect the work by any of its officers or agents before the execution of this contract, unless that understanding or representation is expressly stated in this contract.

(End of clause)

52.236-5 MATERIAL AND WORKMANSHIP (APR 1984)

(a) All equipment, material, and articles incorporated into the work covered by this contract shall be new and of the most suitable grade for the purpose intended, unless otherwise specifically provided in this contract. References in the specifications to equipment, material, articles, or patented processes by trade name, make, or catalog number, shall be regarded as establishing a standard of quality and shall not be construed as limiting competition. The Contractor may, at its option, use any equipment, material, article, or process that, in the judgment of the Contracting Officer, is equal to that named in the specifications, unless otherwise specifically provided in this contract.

(b) The Contractor shall obtain the Contracting Officer's approval of the machinery and mechanical and other equipment to be incorporated into the work. When requesting approval, the Contractor shall furnish to the Contracting Officer the name of the manufacturer, the model number, and other information concerning the performance, capacity, nature, and rating of the machinery and mechanical and other equipment. When required by this contract or by the Contracting Officer, the Contractor shall also obtain the Contracting Officer's approval of the material or articles which the Contractor contemplates incorporating into the work. When requesting approval, the Contractor shall provide full information concerning the material or articles. When directed to do so, the Contractor shall submit samples for approval at the Contractor's expense, with all shipping charges prepaid. Machinery, equipment, material, and articles that do not have the required approval shall be installed or used at the risk of subsequent rejection.

(c) All work under this contract shall be performed in a skillful and workmanlike manner. The Contracting Officer may require, in writing, that the Contractor remove from the work any employee the Contracting Officer deems incompetent, careless, or otherwise objectionable.

(End of clause)

52.236-6 SUPERINTENDENCE BY THE CONTRACTOR (APR 1984)

At all times during performance of this contract and until the work is completed and accepted, the Contractor shall directly superintend the work or assign and have on the worksite a competent superintendent who is satisfactory to the Contracting Officer and has authority to act for the Contractor.

(End of clause)

52.236-7 PERMITS AND RESPONSIBILITIES (NOV 1991)

The Contractor shall, without additional expense to the Government, be responsible for obtaining any necessary licenses and permits, and for complying with any Federal, State, and municipal laws, codes, and regulations applicable to the performance of the work. The Contractor shall also be responsible for all damages to persons or property that occur as a result of the Contractor's fault or negligence. The Contractor shall also be responsible for all materials delivered and work performed until completion and acceptance of the entire work, except for any completed unit of work which may have been accepted under the contract.

(End of clause)

52.236-8 OTHER CONTRACTS (APR 1984)

The Government may undertake or award other contracts for additional work at or near the site of the work under this contract. The Contractor shall fully cooperate with the other contractors and with Government employees and shall carefully adapt scheduling and performing the work under this contract to accommodate the additional work, heeding any direction that may be provided by the Contracting Officer. The Contractor shall not commit or permit any act that will interfere with the performance of work by any other contractor or by Government employees.

(End of clause)

52.236-9 PROTECTION OF EXISTING VEGETATION, STRUCTURES, EQUIPMENT, UTILITIES, AND IMPROVEMENTS (APR 1984)

(a) The Contractor shall preserve and protect all structures, equipment, and vegetation (such as trees, shrubs, and grass) on or adjacent to the work site, which are not to be removed and which do not unreasonably interfere with the work required under this contract. The Contractor shall only remove trees when specifically authorized to do so, and shall avoid damaging vegetation that will remain in place. If any limbs or branches of trees are broken during contract performance, or by the careless operation of equipment, or by workmen, the Contractor shall trim those limbs or branches with a clean cut and paint the cut with a tree-pruning compound as directed by the Contracting Officer.

(b) The Contractor shall protect from damage all existing improvements and utilities

(1) at or near the work site, and

(2) on adjacent property of a third party, the locations of which are made known to or should be known by the Contractor. The Contractor shall repair any damage to those facilities, including those that are the property of a third party, resulting from failure to comply with the requirements of this contract or failure to exercise reasonable care in performing the work. If the Contractor fails or refuses to repair the damage promptly, the Contracting Officer may have the necessary work performed and charge the cost to the Contractor.

(End of clause)

52.236-10 OPERATIONS AND STORAGE AREAS (APR 1984)

(a) The Contractor shall confine all operations (including storage of materials) on Government premises to areas authorized or approved by the Contracting Officer. The Contractor shall hold and save the Government, its officers and agents, free and harmless from liability of any nature occasioned by the Contractor's performance.

(b) Temporary buildings (e.g., storage sheds, shops, offices) and utilities may be erected by the Contractor only with the approval of the Contracting Officer and shall be built with labor and materials furnished by the Contractor without expense to the Government. The temporary buildings and utilities shall remain the property of the Contractor and shall be removed by the Contractor at its expense upon completion of the work. With the written consent of the Contracting Officer, the buildings and utilities may be abandoned and need not be removed.

(c) The Contractor shall, under regulations prescribed by the Contracting Officer, use only established roadways, or use temporary roadways constructed by the Contractor when and as authorized by the Contracting Officer. When materials are transported in prosecuting the work, vehicles shall not be loaded beyond the loading capacity recommended by the manufacturer of the vehicle or prescribed by any Federal, State, or local law or regulation. When it is necessary to cross curbs or sidewalks, the Contractor shall protect them from damage. The Contractor shall repair or pay for the repair of any damaged curbs, sidewalks, or roads.

(End of clause)

52.236-11 USE AND POSSESSION PRIOR TO COMPLETION (APR 1984)

(a) The Government shall have the right to take possession of or use any completed or partially completed part of the work. Before taking possession of or using any work, the Contracting Officer shall furnish the Contractor a list of items of work remaining to be performed or corrected on those portions of the work that the Government intends to

take possession of or use. However, failure of the Contracting Officer to list any item of work shall not relieve the Contractor of responsibility for complying with the terms of the contract. The Government's possession or use shall not be deemed an acceptance of any work under the contract.

(b) While the Government has such possession or use, the Contractor shall be relieved of the responsibility for the loss of or damage to the work resulting from the Government's possession or use, notwithstanding the terms of the clause in this contract entitled "Permits and Responsibilities." If prior possession or use by the Government delays the progress of the work or causes additional expense to the Contractor, an equitable adjustment shall be made in the contract price or the time of completion, and the contract shall be modified in writing accordingly.

(End of clause)

52.236-12 CLEANING UP (APR 1984)

The Contractor shall at all times keep the work area, including storage areas, free from accumulations of waste materials. Before completing the work, the Contractor shall remove from the work and premises any rubbish, tools, scaffolding, equipment, and materials that are not the property of the Government. Upon completing the work, the Contractor shall leave the work area in a clean, neat, and orderly condition satisfactory to the Contracting Officer.

(End of clause)

52.236-14 AVAILABILITY AND USE OF UTILITY SERVICES (APR 1984)

(a) The Government shall make all reasonably required amounts of utilities available to the Contractor from existing outlets and supplies, as specified in the contract. Unless otherwise provided in the contract, the amount of each utility service consumed shall be charged to or paid for by the Contractor at prevailing rates charged to the Government or, where the utility is produced by the Government, at reasonable rates determined by the Contracting Officer. The Contractor shall carefully conserve any utilities furnished without charge.

(b) The Contractor, at its expense and in a workmanlike manner satisfactory to the Contracting Officer, shall install and maintain all necessary temporary connections and distribution lines, and all meters required to measure the amount of each utility used for the purpose of determining charges. Before final acceptance of the work by the Government, the Contractor shall remove all the temporary connections, distribution lines, meters, and associated paraphernalia.

(End of clause)

52.236-17 LAYOUT OF WORK (APR 1984)

The Contractor shall lay out its work from Government established base lines and bench marks indicated on the drawings, and shall be responsible for all measurements in connection with the layout. The Contractor shall furnish, at its own expense, all stakes, templates, platforms, equipment, tools, materials, and labor required to lay out any part of the work. The Contractor shall be responsible for executing the work to the lines and grades that may be established or indicated by the Contracting Officer. The Contractor shall also be responsible for maintaining and preserving all stakes and other marks established by the Contracting Officer until authorized to remove them. If such marks are destroyed by the Contractor or through its negligence before their removal is authorized, the Contracting Officer may replace them and deduct the expense of the replacement from any amounts due or to become due to the Contractor.

(End of clause)

52.236-21 SPECIFICATIONS AND DRAWINGS FOR CONSTRUCTION (FEB 1997)

(a) The Contractor shall keep on the work site a copy of the drawings and specifications and shall at all times give the Contracting Officer access thereto. Anything mentioned in the specifications and not shown on the drawings, or shown on the drawings and not mentioned in the specifications, shall be of like effect as if shown or mentioned in both. In case of difference between drawings and specifications, the specifications shall govern. In case of discrepancy in the figures, in the drawings, or in the specifications, the matter shall be promptly submitted to the Contracting Officer, who shall promptly make a determination in writing. Any adjustment by the Contractor without such a determination shall be at its own risk and expense. The Contracting Officer shall furnish from time to time such detailed drawings and other information as considered necessary, unless otherwise provided.

(b) Wherever in the specifications or upon the drawings the words "directed", "required", "ordered", "designated", "prescribed", or words of like import are used, it shall be understood that the "direction", "requirement", "order", "designation", or "prescription", of the Contracting Officer is intended and similarly the words "approved", "acceptable", "satisfactory", or words of like import shall mean "approved by," or "acceptable to", or "satisfactory to" the Contracting Officer, unless otherwise expressly stated.

(c) Where "as shown," as indicated", "as detailed", or words of similar import are used, it shall be understood that the reference is made to the drawings accompanying this contract unless stated otherwise. The word "provided" as used herein shall be understood to mean "provide complete in place," that is "furnished and installed".

(d) Shop drawings means drawings, submitted to the Government by the Contractor, subcontractor, or any lower tier subcontractor pursuant to a construction contract, showing in detail (1) the proposed fabrication and assembly of structural elements, and (2) the installation (i.e., fit, and attachment details) of materials or equipment. It includes drawings, diagrams, layouts, schematics, descriptive literature, illustrations, schedules, performance and test data, and similar materials furnished by the contractor to explain in detail specific portions of the work required by the contract. The Government may duplicate, use, and disclose in any manner and for any purpose shop drawings delivered under this contract.

(e) If this contract requires shop drawings, the Contractor shall coordinate all such drawings, and review them for accuracy, completeness, and compliance with contract requirements and shall indicate its approval thereon as evidence of such coordination and review. Shop drawings submitted to the Contracting Officer without evidence of the Contractor's approval may be returned for resubmission. The Contracting Officer will indicate an approval or disapproval of the shop drawings and if not approved as submitted shall indicate the Government's reasons therefor. Any work done before such approval shall be at the Contractor's risk. Approval by the Contracting Officer shall not relieve the Contractor from responsibility for any errors or omissions in such drawings, nor from responsibility for complying with the requirements of this contract, except with respect to variations described and approved in accordance with (f) below.

(f) If shop drawings show variations from the contract requirements, the Contractor shall describe such variations in writing, separate from the drawings, at the time of submission. If the Contracting Officer approves any such variation, the Contracting Officer shall issue an appropriate contract modification, except that, if the variation is minor or does not involve a change in price or in time of performance, a modification need not be issued.

(g) The Contractor shall submit to the Contracting Officer for approval four copies (unless otherwise indicated) of all shop drawings as called for under the various headings of these specifications. Three sets (unless otherwise indicated) of all shop drawings, will be retained by the Contracting Officer and one set will be returned to the Contractor.

(End of clause)

52.236-26 PRECONSTRUCTION CONFERENCE (FEB 1995)

If the Contracting Officer decides to conduct a preconstruction conference, the successful offeror will be notified and will be required to attend. The Contracting Officer's notification will include specific details regarding the date, time, and location of the conference, any need for attendance by subcontractors, and information regarding the items to be discussed.

(End of clause)

52.242-13 BANKRUPTCY (JUL 1995)

In the event the Contractor enters into proceedings relating to bankruptcy, whether voluntary or involuntary, the Contractor agrees to furnish, by certified mail or electronic commerce method authorized by the contract, written notification of the bankruptcy to the Contracting Officer responsible for administering the contract. This notification shall be furnished within five days of the initiation of the proceedings relating to bankruptcy filing. This notification shall include the date on which the bankruptcy petition was filed, the identity of the court in which the bankruptcy petition was filed, and a listing of Government contract numbers and contracting offices for all Government contracts against which final payment has not been made. This obligation remains in effect until final payment under this contract.

(End of clause)

52.242-14 SUSPENSION OF WORK (APR 1984)

(a) The Contracting Officer may order the Contractor, in writing, to suspend, delay, or interrupt all or any part of the work of this contract for the period of time that the Contracting Officer determines appropriate for the convenience of the Government.

(b) If the performance of all or any part of the work is, for an unreasonable period of time, suspended, delayed, or interrupted (1) by an act of the Contracting Officer in the administration of this contract, or (2) by the Contracting Officer's failure to act within the time specified in this contract (or within a reasonable time if not specified), an adjustment shall be made for any increase in the cost of performance of this contract (excluding profit) necessarily caused by the unreasonable suspension, delay, or interruption, and the contract modified in writing accordingly. However, no adjustment shall be made under this clause for any suspension, delay, or interruption to the extent that performance would have been so suspended, delayed, or interrupted by any other cause, including the fault or negligence of the Contractor, or for which an equitable adjustment is provided for or excluded under any other term or condition of this contract. (c) A claim under this clause shall not be allowed (1) for any costs incurred more than 20 days before the Contractor shall have notified the Contracting Officer in writing of the act or failure to act involved (but this requirement shall not apply as to a claim resulting from a suspension order), and (2) unless the claim, in an amount stated, is asserted in writing as soon as practicable after the termination of the suspension, delay, or interruption, but not later than the date of final payment under the contract.

(End of clause)

52.243-4 CHANGES (AUG 1987)

(a) The Contracting Officer may, at any time, without notice to the sureties, if any, by written order designated or indicated to be a change order, make changes in the work within the general scope of the contract, including changes--

(1) In the specifications (including drawings and designs);

(2) In the method or manner of performance of the work;

(3) In the Government-furnished facilities, equipment, materials, services, or site; or

(4) Directing acceleration in the performance of the work.

(b) Any other written or oral order (which, as used in this paragraph (b), includes direction, instruction, interpretation, or determination) from the Contracting Officer that causes a change shall be treated as a change order under this clause; provided, that the Contractor gives the Contracting Officer written notice stating

(1) the date, circumstances, and source of the order and

(2) that the Contractor regards the order as a change order.

(c) Except as provided in this clause, no order, statement, or conduct of the Contracting Officer shall be treated as a change under this clause or entitle the Contractor to an equitable adjustment.

(d) If any change under this clause causes an increase or decrease in the Contractor's cost of, or the time required for, the performance of any part of the work under this contract, whether or not changed by any such order, the Contracting Officer shall make an equitable adjustment and modify the contract in writing. However, except for an adjustment based on defective specifications, no adjustment for any change under paragraph (b) of this clause shall be made for any costs incurred more than 20 days before the Contractor gives written notice as required. In the case of defective specifications for which the Government is responsible, the equitable adjustment shall include any increased cost reasonably incurred by the Contractor in attempting to comply with the defective specifications.

(e) The Contractor must assert its right to an adjustment under this clause within 30 days after

(1) receipt of a written change order under paragraph (a) of this clause or (2) the furnishing of a written notice under paragraph (b) of this clause, by submitting to the Contracting Officer a written statement describing the general nature and amount of the proposal, unless this period is extended by the Government. The statement of proposal for adjustment may be included in the notice under paragraph (b) above.

(f) No proposal by the Contractor for an equitable adjustment shall be allowed if asserted after final payment under this contract.

(End of clause)

52.246-12 INSPECTION OF CONSTRUCTION (AUG 1996)

(a) Definition. "Work" includes, but is not limited to, materials, workmanship, and manufacture and fabrication of components.

(b) The Contractor shall maintain an adequate inspection system and perform such inspections as will ensure that the work performed under the contract conforms to contract requirements. The Contractor shall maintain complete inspection records and make them available to the Government. All work shall be conducted under the general

direction of the Contracting Officer and is subject to Government inspection and test at all places and at all reasonable times before acceptance to ensure strict compliance with the terms of the contract.

(c) Government inspections and tests are for the sole benefit of the Government and do not--

(1) Relieve the Contractor of responsibility for providing adequate quality control measures;

(2) Relieve the Contractor of responsibility for damage to or loss of the material before acceptance;

(3) Constitute or imply acceptance; or

(4) Affect the continuing rights of the Government after acceptance of the completed work under paragraph (i) of this section.

(d) The presence or absence of a Government inspector does not relieve the Contractor from any contract requirement, nor is the inspector authorized to change any term or condition of the specification without the Contracting Officer's written authorization.

(e) The Contractor shall promptly furnish, at no increase in contract price, all facilities, labor, and material reasonably needed for performing such safe and convenient inspections and tests as may be required by the Contracting Officer. The Government may charge to the Contractor any additional cost of inspection or test when work is not ready at the time specified by the Contractor for inspection or test, or when prior rejection makes reinspection or retest necessary. The Government shall perform all inspections and tests in a manner that will not unnecessarily delay the work. Special, full size, and performance tests shall be performed as described in the contract.

(f) The Contractor shall, without charge, replace or correct work found by the Government not to conform to contract requirements, unless in the public interest the Government consents to accept the work with an appropriate adjustment in contract price. The Contractor shall promptly segregate and remove rejected material from the premises.

(g) If the Contractor does not promptly replace or correct rejected work, the Government may (1) by contract or otherwise, replace or correct the work and charge the cost to the Contractor or (2) terminate for default the Contractor's right to proceed.

(h) If, before acceptance of the entire work, the Government decides to examine already completed work by removing it or tearing it out, the Contractor, on request, shall promptly furnish all necessary facilities, labor, and material. If the work is found to be defective or nonconforming in any material respect due to the fault of the Contractor or its subcontractors, the Contractor shall defray the expenses of the examination and of satisfactory reconstruction. However, if the work is found to meet contract requirements, the Contracting Officer shall make an equitable adjustment for the additional services involved in the examination and reconstruction, including, if completion of the work was thereby delayed, an extension of time.

(i) Unless otherwise specified in the contract, the Government shall accept, as promptly as practicable after completion and inspection, all work required by the contract or that portion of the work the Contracting Officer determines can be accepted separately. Acceptance shall be final and conclusive except for latent defects, fraud, gross mistakes amounting to fraud, or the Government's rights under any warranty or guarantee.

(End of clause)

52.246-21 WARRANTY OF CONSTRUCTION (MAR 1994)

(a) In addition to any other warranties in this contract, the Contractor warrants, except as provided in paragraph (i) of this clause, that work performed under this contract conforms to the contract requirements and is free of any defect in equipment, material, or design furnished, or workmanship performed by the Contractor or any subcontractor or supplier at any tier.

(b) This warranty shall continue for a period of 1 year from the date of final acceptance of the work. If the Government takes possession of any part of the work before final acceptance, this warranty shall continue for a period of 1 year from the date the Government takes possession.

(c) The Contractor shall remedy at the Contractor's expense any failure to conform, or any defect. In addition, the Contractor shall remedy at the Contractor's expense any damage to Government-owned or controlled real or personal property, when that damage is the result of--

(1) The Contractor's failure to conform to contract requirements; or

(2) Any defect of equipment, material, workmanship, or design furnished.

(d) The Contractor shall restore any work damaged in fulfilling the terms and conditions of this clause. The Contractor's warranty with respect to work repaired or replaced will run for 1 year from the date of repair or replacement.

(e) The Contracting Officer shall notify the Contractor, in writing, within a reasonable time after the discovery of any failure, defect, or damage.

(f) If the Contractor fails to remedy any failure, defect, or damage within a reasonable time after receipt of notice, the Government shall have the right to replace, repair, or otherwise remedy the failure, defect, or damage at the Contractor's expense.
(g) With respect to all warranties, express or implied, from subcontractors, manufacturers, or suppliers for work performed and materials furnished under this contract, the Contractor shall--

(1) Obtain all warranties that would be given in normal commercial practice;

(2) Require all warranties to be executed, in writing, for the benefit of the Government, if directed by the Contracting Officer; and

(3) Enforce all warranties for the benefit of the Government, if directed by the Contracting Officer.

(h) In the event the Contractor's warranty under paragraph (b) of this clause has expired, the Government may bring suit at its expense to enforce a subcontractor's, manufacturer's, or supplier's warranty.

(i) Unless a defect is caused by the negligence of the Contractor or subcontractor or supplier at any tier, the Contractor shall not be liable for the repair of any defects of material or design furnished by the Government nor for the repair of any damage that results from any defect in Government-furnished material or design.

(j) This warranty shall not limit the Government's rights under the Inspection and Acceptance clause of this contract with respect to latent defects, gross mistakes, or fraud.

(End of clause)

52.249-2 TERMINATION FOR CONVENIENCE OF THE GOVERNMENT (FIXED-PRICE) (SEP 1996)

(a) The Government may terminate performance of work under this contract in whole or, from time to time, in part if the Contracting Officer determines that a termination is in the Government's interest. The Contracting Officer shall terminate by delivering to the Contractor a Notice of Termination specifying the extent of termination and the effective date.

(b) After receipt of a Notice of Termination, and except as directed by the Contracting Officer, the Contractor shall immediately proceed with the following obligations, regardless of any delay in determining or adjusting any amounts due under this clause:

(1) Stop work as specified in the notice.

(2) Place no further subcontracts or orders (referred to as subcontracts in this clause) for materials, services, or facilities, except as necessary to complete the continued portion of the contract.

(3) Terminate all subcontracts to the extent they relate to the work terminated.

(4) Assign to the Government, as directed by the Contracting Officer, all right, title, and interest of the Contractor under the subcontracts terminated, in which case the Government shall have the right to settle or to pay any termination settlement proposal arising out of those terminations.

(5) With approval or ratification to the extent required by the Contracting Officer, settle all outstanding liabilities and termination settlement proposals arising from the termination of subcontracts; the approval or ratification will be final for purposes of this clause.

(6) As directed by the Contracting Officer, transfer title and deliver to the Government (i) the fabricated or unfabricated parts, work in process, completed work, supplies, and other material produced or acquired for the work terminated, and (ii) the completed or partially completed plans, drawings, information, and other property that, if the contract had been completed, would be required to be furnished to the Government.

(7) Complete performance of the work not terminated.

(8) Take any action that may be necessary, or that the Contracting Officer may direct, for the protection and preservation of the property related to this contract that is in the possession of the Contractor and in which the Government has or may acquire an interest.

(9) Use its best efforts to sell, as directed or authorized by the Contracting Officer, any property of the types referred to in subparagraph (b)(6) of this clause; provided, however, that the Contractor (i) is not required to extend credit to any purchaser and (ii) may acquire the property under the conditions prescribed by, and at prices approved by, the Contracting Officer. The proceeds of any transfer or disposition will be applied to reduce any payments to be made by the Government under this contract, credited to the price or cost of the work, or paid in any other manner directed by the Contracting Officer.

(c) The Contractor shall submit complete termination inventory schedules no later than 120 days from the effective date of termination, unless extended in writing by the Contracting Officer upon written request of the Contractor within this 120-day period.

(d) After expiration of the plant clearance period as defined in Subpart 45.6 of the Federal Acquisition Regulation, the Contractor may submit to the Contracting Officer a list, certified as to quantity and quality, of termination inventory not previously disposed of, excluding items authorized for disposition by the Contracting Officer. The Contractor may request the Government to remove those items or enter into an agreement for their storage. Within 15 days, the Government will accept title to those items and remove them or enter into a storage agreement. The Contracting Officer may verify the list upon removal of the items, or if stored, within 45 days from submission of the list, and shall correct the list, as necessary, before final settlement.

(e) After termination, the Contractor shall submit a final termination settlement proposal to the Contracting Officer in the form and with the certification prescribed by the Contracting Officer. The Contractor shall submit the proposal promptly, but no later than 1 year from the effective date of termination, unless extended in writing by the Contracting Officer upon written request of the Contractor within this 1-year period. However, if the Contracting Officer determines that the facts justify it, a termination settlement proposal may be received and acted on after 1 year or any extension. If the Contractor fails to submit the proposal within the time allowed, the Contracting Officer may determine, on the basis of information available, the amount, if any, due the Contractor because of the termination and shall pay the amount determined.

(f) Subject to paragraph (e) of this clause, the Contractor and the Contracting Officer may agree upon the whole or any part of the amount to be paid or remaining to be paid because of the termination. The amount may include a reasonable allowance for profit on work done. However, the agreed amount, whether under this paragraph (g) or paragraph (g) of this clause, exclusive of costs shown in subparagraph (g)(3) of this clause, may not exceed the total contract price as reduced by (1) the amount of payments previously made and (2) the contract price of work not terminated. The contract shall be modified, and the Contractor paid the agreed amount. Paragraph (g) of this clause shall not limit, restrict, or affect the amount that may be agreed upon to be paid under this paragraph.

(g) If the Contractor and the Contracting Officer fail to agree on the whole amount to be paid because of the termination of work, the Contracting Officer shall pay the Contractor the amounts determined by the Contracting Officer as follows, but without duplication of any amounts agreed on under paragraph (f) of this clause:

(1) The contract price for completed supplies or services accepted by the Government (or sold or acquired under subparagraph (b)(9) of this clause) not previously paid for, adjusted for any saving of freight and other charges.

(2) The total of--

(i) The costs incurred in the performance of the work terminated, including initial costs and preparatory expense allocable thereto, but excluding any costs attributable to supplies or services paid or to be paid under subparagraph (f)(1) of this clause;

(ii) The cost of settling and paying termination settlement proposals under terminated subcontracts that are properly chargeable to the terminated portion of the contract if not included in subdivision (g)(2)(i) of this clause; and

(iii) A sum, as profit on subdivision (g)(2)(i) of this clause, determined by the Contracting Officer under 49.202 of the Federal Acquisition Regulation, in effect on the date of this contract, to be fair and reasonable; however, if it appears that the Contractor would have sustained a loss on the entire contract had it been completed, the Contracting Officer shall allow no profit under this subdivision (iii) and shall reduce the settlement to reflect the indicated rate of loss.

(3) The reasonable costs of settlement of the work terminated, including--

(i) Accounting, legal, clerical, and other expenses reasonably necessary for the preparation of termination settlement proposals and supporting data;

(ii) The termination and settlement of subcontracts (excluding the amounts of such settlements); and

(iii) Storage, transportation, and other costs incurred, reasonably necessary for the preservation, protection, or disposition of the termination inventory.

(h) Except for normal spoilage, and except to the extent that the Government expressly assumed the risk of loss, the Contracting Officer shall exclude from the amounts payable to the Contractor under paragraph (g) of this clause, the fair value, as determined by the Contracting Officer, of property that is destroyed, lost, stolen, or damaged so as to become undeliverable to the Government or to a buyer.

(i) The cost principles and procedures of Part 31 of the Federal Acquisition Regulation, in effect on the date of this contract, shall govern all costs claimed, agreed to, or determined under this clause.

(j) The Contractor shall have the right of appeal, under the Disputes clause, from any determination made by the Contracting Officer under paragraph (e), (g), or (l) of this clause, except that if the Contractor failed to submit the termination settlement proposal or request for equitable adjustment within the time provided in paragraph (e) or (l), respectively, and failed to request a time extension, there is no right of appeal.

(k) In arriving at the amount due the Contractor under this clause, there shall be deducted--

(1) All unliquidated advance or other payments to the Contractor under the terminated portion of this contract;

(2) Any claim which the Government has against the Contractor under this contract; and

(3) The agreed price for, or the proceeds of sale of, materials, supplies, or other things acquired by the Contractor or sold under the provisions of this clause and not recovered by or credited to the Government.

(l) If the termination is partial, the Contractor may file a proposal with the Contracting Officer for an equitable adjustment of the price(s) of the continued portion of the contract. The Contracting Officer shall make any equitable adjustment agreed upon. Any proposal by the Contractor for an equitable adjustment under this clause shall be requested within 90 days from the effective date of termination unless extended in writing by the Contracting Officer.

(m)(1) The Government may, under the terms and conditions it prescribes, make partial payments and payments against costs incurred by the Contractor for the terminated portion of the contract, if the Contracting Officer believes the total of these payments will not exceed the amount to which the Contractor will be entitled.

(2) If the total payments exceed the amount finally determined to be due, the Contractor shall repay the excess to the Government upon demand, together with interest computed at the rate established by the Secretary of the Treasury under 50 U.S.C. App. 1215(b)(2). Interest shall be computed for the period from the date the excess payment is received by the Contractor to the date the excess is repaid. Interest shall not be charged on any excess payment due to a reduction in the Contractor's termination settlement proposal because of retention or other disposition of termination inventory until 10 days after the date of the retention or disposition, or a later date determined by the Contracting Officer because of the circumstances.

(n) Unless otherwise provided in this contract or by statute, the Contractor shall maintain all records and documents relating to the terminated portion of this contract for 3 years after final settlement. This includes all books and other evidence bearing on the Contractor's costs and expenses under this contract. The Contractor shall make these records and documents available to the Government, at the Contractor's office, at all reasonable times, without any direct charge. If approved by the Contracting Officer, photographs, microphotographs, or other authentic reproductions may be maintained instead of original records and documents.

(End of clause)

52.249-10 DEFAULT (FIXED-PRICE CONSTRUCTION) (APR 1984)

(a) If the Contractor refuses or fails to prosecute the work or any separable part, with the diligence that will insure its completion within the time specified in this contract including any extension, or fails to complete the work within this time, the Government may, by written notice to the Contractor, terminate the right to proceed with the work (or the separable part of the work) that has been delayed. In this event, the Government may take over the work and complete it by contract or otherwise, and may take possession of and use any materials, appliances, and plant on the work site necessary for completing the work. The Contractor and its sureties shall be liable for any damage to the Government resulting from the Contractor's refusal or failure to complete the work within the specified time, whether

or not the Contractor's right to proceed with the work is terminated. This liability includes any increased costs incurred by the Government in completing the work.

(b) The Contractor's right to proceed shall not be terminated nor the Contractor charged with damages under this clause, if--

(1) The delay in completing the work arises from unforeseeable causes beyond the control and without the fault or negligence of the Contractor. Examples of such causes include

(i) acts of God or of the public enemy,

(ii) acts of the Government in either its sovereign or contractual capacity,

(iii) acts of another Contractor in the performance of a contract with the Government,

(iv) fires,

(v) floods,

(vi) epidemics,

(vii) quarantine restrictions,

(viii) strikes,

(ix) freight embargoes,

(x) unusually severe weather, or delays of subcontractors or suppliers at any tier arising from unforeseeable causes beyond the control and without the fault or negligence of both the Contractor and the subcontractors or suppliers; and

(2) The Contractor, within 10 days from the beginning of any delay (unless extended by the Contracting Officer), notifies the Contracting Officer in writing of the causes of delay. The Contracting Officer shall ascertain the facts and the extent of delay. If, in the judgment of the Contracting Officer, the findings of fact warrant such action, the time for completing the work shall be extended. The findings of the Contracting Officer shall be final and conclusive on the parties, but subject to appeal under the Disputes clause.

(c) If, after termination of the Contractor's right to proceed, it is determined that the Contractor was not in default, or that the delay was excusable, the rights and obligations of the parties will be the same as if the termination had been issued for the convenience of the Government.

The rights and remedies of the Government in this clause are in addition to any other rights and remedies provided by law or under this contract.

(End of clause)

52.253-1 COMPUTER GENERATED FORMS (JAN 1991)

(a) Any data required to be submitted on a Standard or Optional Form prescribed by the Federal Acquisition Regulation (FAR) may be submitted on a computer generated version of the form, provided there is no change to the name, content, or sequence of the data elements on the form, and provided the form carries the Standard or Optional Form number and edition date.

(b) Unless prohibited by agency regulations, any data required to be submitted on an agency unique form prescribed by an agency supplement to the FAR may be submitted on a computer generated version of the form provided there is no change to the name, content, or sequence of the data elements on the form and provided the form carries the agency form number and edition date.

(f) If the Contractor submits a computer generated version of a form that is different than the required form, then the rights and obligations of the parties will be determined based on the content of the required form.

(End of clause)

252.201-7000 CONTRACTING OFFICER'S REPRESENTATIVE (DEC 1991)

(a) "Definition. Contracting officer's representative" means an individual designated in accordance with subsection 201.602-2 of the Defense Federal Acquisition Regulation Supplement and authorized in writing by the contracting officer to perform specific technical or administrative functions.

(b) If the Contracting Officer designates a contracting officer's representative (COR), the Contractor will receive a copy of the written designation. It will specify the extent of the COR's authority to act on behalf of the contracting officer. The COR is not authorized to make any commitments or changes that will affect price, quality, quantity, delivery, or any other term or condition of the contract.

(End of clause)

252.203-7001 PROHIBITION ON PERSONS CONVICTED OF FRAUD OR OTHER DEFENSE-CONTRACT-RELATED FELONIES (MAR 1999)

(a) Definitions. As used in this clause—

(1) “Arising out of a contract with the DoD” means any act in connection with—

(i) Attempting to obtain;

(ii) Obtaining, or

(iii) Performing a contract or first-tier subcontract of any agency, department, or component of the Department of Defense (DoD).

(2) “Conviction of fraud or any other felony” means any conviction for fraud or a felony in violation of state or Federal criminal statutes, whether entered on a verdict or plea, including a plea of *nolo contendere*, for which sentence has been imposed.

(3) “Date of conviction” means the date judgment was entered against the individual.

(b) Any individual who is convicted after September 29, 1988, of fraud or any other felony arising out of a contract with the DoD is prohibited from serving--

(1) In a management or supervisory capacity on any DoD contract or first-tier subcontract;

(2) On the board of directors of any DoD contractor or first-tier subcontractor;

(3) As a consultant, agent, or representative for any DoD contractor or first-tier subcontractor; or

(4) In any other capacity with the authority to influence, advise, or control the decisions of any DoD contractor or subcontractor with regard to any DoD contract or first-tier subcontract.

(c) Unless waived, the prohibition in paragraph (b) of this clause applies for not less than 5 years from the date of conviction.

(d) 10 U.S.C. 2408 provides that a defense contractor or first-tier subcontractor shall be subject to a criminal penalty of not more than $500,000 if convicted of knowingly—

(1) Employing a person under a prohibition specified in paragraph (b) of this clause; or

(2) Allowing such a person to serve on the board of directors of the contractor or first-tier subcontractor.

(e) In addition to the criminal penalties contained in 10 U.S.C. 2408, the Government may consider other available remedies, such as—

(1) Suspension or debarment;

(2) Cancellation of the contract at no cost to the Government; or

(3) Termination of the contract for default.

(f) The Contractor may submit written requests for waiver of the prohibition in paragraph (b) of this clause to the Contracting Officer. Requests shall clearly identify—

(1) The person involved;

(2) The nature of the conviction and resultant sentence or punishment imposed;

(3) The reasons for the requested waiver; and

(4) An explanation of why a waiver is in the interest of national security.

(g) The Contractor agrees to include the substance of this clause, appropriately modified to reflect the identity and relationship of the parties, in all first-tier subcontracts exceeding the simplified acquisition threshold in Part 2 of the Federal Acquisition Regulation, except those for commercial items or components.

(h) Pursuant to 10 U.S.C. 2408(c), defense contractors and subcontractors may obtain information as to whether a particular person has been convicted of fraud or any other felony arising out of a contract with the DoD by contacting The Office of Justice Programs, The Denial of Federal Benefits Office, U.S. Department of Justice, telephone (202) 616-3507.

(End of clause)

252.203-7002 DISPLAY OF DOD HOTLINE POSTER (DEC 1991)

(a) The Contractor shall display prominently in common work areas within business segments performing work under Department of Defense (DoD) contracts, DoD Hotline Posters prepared by the DoD Office of the Inspector

General.

(b) DoD Hotline Posters may be obtained from the DoD Inspector General, ATTN: Defense Hotline, 400 Army Navy Drive, Washington, DC 22202-2884.

(g) The Contractor need not comply with paragraph (a) of this clause if it has established a mechanism, such as a hotline, by which employees may report suspected instances of improper conduct, and instructions that encourage employees to make such reports.

(End of clause)

252.205-7000 PROVISION OF INFORMATION TO COOPERATIVE AGREEMENT HOLDERS (DEC 1991)

(a) Definition.

"Cooperative agreement holder" means a State or local government; a private, nonprofit organization; a tribal organization (as defined in section 4(c) of the Indian Self-Determination and Education Assistance Act (Pub. L. 93-268; 25 U.S.C. 450 (c))); or an economic enterprise (as defined in section 3(e) of the Indian Financing Act of 1974 (Pub. L. 93-362; 25 U.S.C. 1452(e))) whether such economic enterprise is organized for profit or nonprofit purposes; which has an agreement with the Defense Logistics Agency to furnish procurement technical assistance to business entities.

(b) The Contractor shall provide cooperative agreement holders, upon their request, with a list of those appropriate employees or offices responsible for entering into subcontracts under defense contracts. The list shall include the business address, telephone number, and area of responsibility of each employee or office.

(c) The Contractor need not provide the listing to a particular cooperative agreement holder more frequently than once a year.

(End of clause)

252.215-7000 PRICING ADJUSTMENTS (DEC 1991)

The term "pricing adjustment," as used in paragraph (a) of the clauses entitled "Price Reduction for Defective Cost or Pricing Data - Modifications," "Subcontractor Cost or Pricing Data," and "Subcontractor Cost or Pricing Data - Modifications," means the aggregate increases and/or decreases in cost plus applicable profits.

(End of clause)

252.219-7003 SMALL, SMALL DISADVANTAGED AND WOMEN-OWNED SMALL BUSINESS SUBCONTRACTING PLAN (DOD CONTRACTS) (APR. 1996)

This clause supplements the Federal Acquisition Regulation 52.219-9, Small, Small Disadvantaged and Women-Owned Small Business Subcontracting Plan, clause of this contract.

(a) *Definitions. Historically black colleges and universities,* as used in this clause, means institutions determined by the Secretary of Education to meet the requirements of 34 CFR 608.2. The term also means any nonprofit research institution that was an integral part of such a college or university before November 14, 1986.

Minority institutions, as used in this clause, means institutions meeting the requirements of section 1046(3) of the Higher Education Act of 1965 (20 U.S.C. 1135d-5(3)). The term also includes Hispanic-serving institutions as defined in section 316(b)(1) of such Act (20 U.S.C. 1059c(b)(1)).

(b) Except for company or division-wide commercial items subcontracting plans, the term *small disadvantaged business*, when used in the FAR 52.219-9 clause, includes historically black colleges and universities and minority institutions, in addition to small disadvantaged business concerns.

(c) Work under the contract or its subcontracts shall be credited toward meeting the small disadvantaged business concern goal required by paragraph (d) of the FAR 52.219-9 clause when:

(1) It is performed on Indian lands or in joint venture with an Indian tribe or a tribally-owned corporation, and

(2) It meets the requirements of 10 U.S.C. 2323a.

(d) Subcontracts awarded to workshops approved by the Committee for Purchase from People Who are Blind or Severely Disabled (41 U.S.C. 46-48), may be counted toward the Contractor's small business subcontracting goal.

(e) A mentor firm, under the Pilot Mentor-Protege Program established under Section 831 of Pub. L. 101-510, as amended, may count toward its small disadvantaged business goal, subcontracts awarded--

(f) The master plan approval referred to in paragraph (f) of the FAR 52.219-9 clause is approval by the Contractor's cognizant contract administration activity.

(g) In those subcontracting plans which specifically identify small, small disadvantaged, and women-owned small businesses, the Contractor shall notify the Administrative Contracting Officer of any substitutions of firms that are not small, small disadvantaged, or women-owned small businesses for the firms listed in the subcontracting plan. Notifications shall be in writing and shall occur within a reasonable period of time after award of the subcontract. Contractor-specified formats shall be acceptable.

(End of clause)

252.223-7001 HAZARD WARNING LABELS (DEC 1991)

(a) "Hazardous material," as used in this clause, is defined in the Hazardous Material Identification and Material Safety Data clause of this contract.

(b) The Contractor shall label the item package (unit container) of any hazardous material to be delivered under this contract in accordance with the Hazard Communication Standard (29 CFR 1910.1200 et seq). The Standard requires that the hazard warning label conform to the requirements of the standard unless the material is otherwise subject to the labeling requirements of one of the following statutes:

(1) Federal Insecticide, Fungicide and Rodenticide Act;

(2) Federal Food, Drug and Cosmetics Act;

(3) Consumer Product Safety Act;

(4) Federal Hazardous Substances Act; or

(5) Federal Alcohol Administration Act.

(c) The Offeror shall list which hazardous material listed in the Hazardous Material Identification and Material Safety Data clause of this contract will be labeled in accordance with one of the Acts in paragraphs (b)(1) through (5) of this clause instead of the Hazard Communication Standard. Any hazardous material not listed will be interpreted to mean that a label is required in accordance with the Hazard Communication Standard.

MATERIAL (If None, Insert "None.")	ACT
_____	_____
_____	_____

(d) The apparently successful Offeror agrees to submit, before award, a copy of the hazard warning label for all hazardous materials not listed in paragraph (c) of this clause. The Offeror shall submit the label with the Material Safety Data Sheet being furnished under the Hazardous Material Identification and Material Safety Data clause of this contract.

(e) The Contractor shall also comply with MIL-STD-129, Marking for Shipment and Storage (including revisions adopted during the term of this contract).

(End of clause)

252.223-7004 DRUG-FREE WORK FORCE (SEP 1988)

(a) Definitions.

(1) "Employee in a sensitive position," as used in this clause, means an employee who has been granted access to classified information; or employees in other positions that the Contractor determines involve national security; health or safety, or functions other than the foregoing requiring a high degree of trust and confidence.

(2) "Illegal drugs," as used in this clause, means controlled substances included in Schedules I and II, as defined by section 802(6) of title 21 of the United States Code, the possession of which is unlawful under chapter 13 of that Title. The term "illegal drugs" does not mean the use of a controlled substance pursuant to a valid prescription or other uses authorized by law.

(b) The Contractor agrees to institute and maintain a program for achieving the objective of a drug-free work force. While this clause defines criteria for such a program, contractors are encouraged to implement alternative approaches comparable to the criteria in paragraph (c) that are designed to achieve the objectives of this clause.

(c) Contractor programs shall include the following, or appropriate alternatives:

(1) Employee assistance programs emphasizing high level direction, education, counseling, rehabilitation, and coordination with available community resources;

(2) Supervisory training to assist in identifying and addressing illegal drug use by Contractor employees;

(3) Provision for self-referrals as well as supervisory referrals to treatment with maximum respect for individual confidentiality consistent with safety and security issues;

(4) Provision for identifying illegal drug users, including testing on a controlled and carefully monitored basis. Employee drug testing programs shall be established taking account of the following:

(i) The Contractor shall establish a program that provides for testing for the use of illegal drugs by employees in sensitive positions. The extent of and criteria for such testing shall be determined by the Contractor based on considerations that include the nature of the work being performed under the contract, the employee's duties, and

efficient use of Contractor resources, and the risks to health, safety, or national security that could result from the failure of an employee adequately to discharge his or her position.

(ii) In addition, the Contractor may establish a program for employee drug testing--

(A) When there is a reasonable suspicion that an employee uses illegal drugs; or

(B) When an employees has been involved in an accident or unsafe practice;

(C) As part of or as a follow-up to counseling or rehabilitation for illegal drug use;

(D) As part of a voluntary employee drug testing program.

(iii) The Contractor may establish a program to test applicants for employment for illegal drug use.

(iv) For the purpose of administering this clause, testing for illegal drugs may be limited to those substances for which testing is prescribed by section 2..1 of subpart B of the "Mandatory Guidelines for Federal Workplace Drug Testing Programs" (53 FR 11980 (April 11, 1988), issued by the Department of Health and Human Services.

(d) Contractors shall adopt appropriate personnel procedures to deal with employees who are found to be using drugs illegally. Contractors shall not allow any employee to remain on duty or perform in a sensitive position who is found to use illegal drugs until such times as the Contractor, in accordance with procedures established by the Contractor, determines that the employee may perform in such a position.

(e) The provisions of this clause pertaining to drug testing program shall not apply to the extent that are inconsistent with state or local law, or with an existing collective bargaining agreement; provided that with respect to the latter, the Contractor agrees those issues that are in conflict will be a subject of negotiation at the next collective bargaining session.

(End of clause)

252.223-7006 PROHIBITION ON STORAGE AND DISPOSAL OF TOXIC AND HAZARDOUS MATERIALS (APR 1993)

(a) "Definitions".

As used in this clause --

(1) "Storage" means a non-transitory, semi-permanent or permanent holding, placement, or leaving of material. It does not include a temporary accumulation of a limited quantity of a material used in or a waste generated or resulting from authorized activities, such as servicing, maintenance, or repair of Department of Defense (DoD) items, equipment, or facilities.

(2) "Toxic or hazardous materials" means:

(i) Materials referred to in section 101(14) of the Comprehensive Environmental Response, Compensation, and Liability Act (CERCLA) of 1980 (42 U.S.C. 9601(14)) and materials designated under section 102 of CERCLA (42 U.S.C. 9602) (40 CFR part 302);

(ii) Materials that are of an explosive, flammable, or pyrotechnic nature; or

(iii) Materials otherwise identified by the Secretary of Defense as specified in DoD regulations.

(b) In accordance with 10 U.S.C. 2692, the Contractor is prohibited from storing or disposing of non-DoD-owned toxic or hazardous materials on a DoD installation, except to the extent authorized by a statutory exception to 10 U.S.C. 2692 or as authorized by the Secretary of Defense or his designee.

(End of clause)

252.227-7033 RIGHTS IN SHOP DRAWINGS (APR 1966)

(a) Shop drawings for construction means drawings, submitted to the Government by the Construction Contractor, subcontractor or any lower-tier subcontractor pursuant to a construction contract, showing in detail (i) the proposed fabrication and assembly of structural elements and (ii) the installation (i.e., form, fit, and attachment details) of materials or equipment. The Government may duplicate, use, and disclose in any manner and for any purpose shop drawings delivered under this contract.

(b) This clause, including this paragraph (b), shall be included in all subcontracts hereunder at any tier.

252.236-7000 MODIFICATION PROPOSALS - PRICE BREAKDOWN. (DEC 1991)

(a) The Contractor shall furnish a price breakdown, itemized as required and within the time specified by the Contracting Officer, with any proposal for a contract modification.

(b) The price breakdown --

(1) Must include sufficient detail to permit an analysis of profit, and of all costs for --

(i) Material;

(ii) Labor;

(iii) Equipment;

(iv) Subcontracts; and

(v) Overhead; and

(2) Must cover all work involved in the modification, whether the work was deleted, added, or changed.

(c) The Contractor shall provide similar price breakdowns to support any amounts claimed for subcontracts.

(d) The Contractor's proposal shall include a justification for any time extension proposed.

252.236-7008 CONTRACT PRICES - BIDDING SCHEDULES. (DEC 1991)

(a) The Government's payment for the items listed in the Bidding Schedule shall constitute full compensation to the Contractor for --

(1) Furnishing all plant, labor, equipment, appliances, and materials; and

(2) Performing all operations required to complete the work in conformity with the drawings and specifications.

(b) The Contractor shall include in the prices for the items listed in the Bidding Schedule all costs for work in the specifications, whether or not specifically listed in the Bidding Schedule.

252.243-7001 PRICING OF CONTRACT MODIFICATIONS (DEC 1991)

When costs are a factor in any price adjustment under this contract, the contract cost principles and procedures in FAR part 31 and DFARS part 231, in effect on the date of this contract, apply.

252.243-7002 REQUESTS FOR EQUITABLE ADJUSTMENT (MAR 1998)

(a) The amount of any request for equitable adjustment to contract terms shall accurately reflect the contract adjustment for which the Contractor believes the Government is liable. The request shall include only costs for performing the change, and shall not include any costs that already have been reimbursed or that have been separately claimed. All indirect costs included in the request shall be properly allocable to the change in accordance with applicable acquisition regulations.

(b) In accordance with 10 U.S.C. 2410(a), any request for equitable adjustment to contract terms that exceeds the simplified acquisition threshold shall bear, at the time of submission, the following certificate executed by an individual authorized to certify the request on behalf of the Contractor:

I certify that the request is made in good faith, and that the supporting data are accurate and complete to the best of my knowledge and belief.

(Official's Name)

(Title)

(c) The certification in paragraph (b) of this clause requires full disclosure of all relevant facts, including--

(1) Cost or pricing data if required in accordance with subsection 15.403-4 of the Federal Acquisition Regulation (FAR); and

(2) Information other than cost or pricing data, in accordance with subsection 15.403-3 of the FAR, including actual cost data and data to support any estimated costs, even if cost or pricing data are not required.

(d) The certification requirement in paragraph (b) of this clause does not apply to----

(1) Requests for routine contract payments; for example, requests for payment for accepted supplies and services, routine vouchers under a cost-reimbursement type contract, or progress payment invoices; or

(2) Final adjustment under an incentive provision of the contract.

CLAUSES INCORPORATED BY FULL TEXT

52.211-10 COMMENCEMENT, PROSECUTION, AND COMPLETION OF WORK (APR 1984)

The Contractor shall be required to (a) commence work under this contract within 30 calendar days after the date the Contractor receives the notice to proceed, (b) prosecute the work diligently, and (c) complete the entire work ready for use not later than 570 days. * The time stated for completion shall include final cleanup of the premises.

*The Contracting Officer shall specify either a number of days after the date the contractor receives the notice to proceed, or a calendar date.

(End of clause)

52.211-12 LIQUIDATED DAMAGES--CONSTRUCTION (SEP 2000)

(a) If the Contractor fails to complete the work within the time specified in the contract, the Contractor shall pay liquidated damages to the Government in the amount of $1,335.00 for each calendar day of delay until the work is completed or accepted.

(b) If the Government terminates the Contractor's right to proceed, liquidated damages will continue to accrue until the work is completed. These liquidated damages are in addition to excess costs of repurchase under the Termination clause.

(End of clause)

52.211-13 TIME EXTENSIONS (SEP 2000)

Time extensions for contract changes will depend upon the extent, if any, by which the changes cause delay in the completion of the various elements of construction. The change order granting the time extension may provide that the contract completion date will be extended only for those specific elements related to the changed work and that the remaining contract completion dates for all other portions of the work will not be altered. The change order also may provide an equitable readjustment of liquidated damages under the new completion schedule.

(End of clause)

52.232-5000 PAYMENT FOR MATERIALS DELIVERED OFF-SITE (MAR 1995)--EFARS

(a) Pursuant to FAR clause 52.232-5, Payments Under Fixed Priced Construction Contracts, materials delivered to the contractor at locations other than the site of the work may be taken into consideration in making payments if included in payment estimates and if all the conditions of the General Provisions are fulfilled. Payment for items delivered to locations other than the work site will be limited to: (1) materials required by the technical provisions; or

(3) materials that have been fabricated to the point where they are identifiable to an item of work required under this contract.

(b) Such payment will be made only after receipt of paid or receipted invoices or invoices with canceled check showing title to the items in the prime contractor and including the value of material and labor incorporated into the item. In addition to petroleum products, payment for materials delivered off-site is limited to the following items:

_____

(End of clause)

52.232-5002 CONTINUING CONTRACTS (ALTERNATE) (MAR 1995) — EFARS

(a) Funds are not available at the inception of this contract to cover the entire contract price. The sum of **$1,000,000.00** has been reserved for this contract and is available for payment to the contractor during the current fiscal year. Funds, provided by one or more non-federal project sponsors will be reserved for this contract. The liability of the United States for payments beyond the funds reserved for this contract is contingent on the reservation of additional funds.

(b) Failure to make payments in excess of the amount currently reserved, or that may be reserved from time to time, shall not be considered a breach of this contract, and shall not entitle the contractor to a price adjustment under the terms of this contract except as specifically provided in paragraphs (e) and (h) below.

(c) The Government may at any time reserve additional funds for payments under the contract if there are funds available for such purpose. The contracting officer will promptly notify the contractor of any additional funds reserved for the contract by issuing an administrative modification to the contract.

(d) If earnings will be such that funds reserved for the contract will be exhausted before the end of any fiscal year, the contractor shall give written notice to the contracting officer of the estimated date of exhaustion and the amount of additional funds which will be needed to meet payments due or to become due under this contract during that fiscal year. This notice shall be given not less than 45 nor more than 60 days prior to the estimated date of exhaustion.

(e) No payments will be make after exhaustion of funds except to the extent that additional funds are reserved for the contract. If and when sufficient additional funds are reserved, the contractor shall be entitled to simple interest on any payment that the contracting officer determines was actually earned under the terms of this contract and would have been made except for exhaustion of funds. Interest shall be computed from the time such payment would otherwise have been made until actually or constructively made, and shall be at the rate established by the Secretary of the Treasury pursuant to Public Law 92-41, 85 STAT 97, as in effect on the first day of the delay in such payment.

(f) Any suspension, delay, or interruption of work arising from exhaustion or anticipated exhaustion of funds shall not constitute a breach of this contract and shall not entitle the contractor to any price adjustment under a "Suspension of Work" or similar clause or in any other manner under this contract.

(g) An equitable adjustment in performance time shall be made for any increase in the time required for performance of any part of the work arising from exhaustion of funds or the reasonable anticipation of exhaustion of funds.

(h) If, upon the expiration of sixty (60) days after the beginning of the fiscal year following an exhaustion of funds, the Government has failed to reserve sufficient additional funds to cover payments other vise due, the contractor, by written notice delivered to the contracting officer at any time before such additional funds are reserved, may elect to treat his right to proceed with the work as having been terminated. Such a termination shall be

at no cost to the Government, except that, to the extent that additional funds to make payment therefore are allocated to this contract, it may be treated as a termination for the convenience of the Government.

(i) If at any time it becomes apparent that the funds reserved for any fiscal year are in excess of the funds required to meet all payments due or to become due the contractor because of work performed and to be performed under this contract during the fiscal year, the Government reserves the right, after notice to the contractor, to reduce said reservation by the amount of such excess.

(j) The term "Reservation" means monies that have been set aside and made available for payments under this contract.

(End of clause)

52.236-4 PHYSICAL DATA (APR 1984)

Data and information furnished or referred to below is for the Contractor's information. The Government shall not be responsible for any interpretation of or conclusion drawn from the data or information by the Contractor.

(a) The indications of physical conditions on the drawings and in the specifications are the result of site investigations by . . . . . [insert a description of investigational methods used, such as surveys, auger borings, core borings, test pits, probings, test tunnels].

(b) Weather conditions . . . . . (insert a summary of weather records and warnings).

(c) Transportation facilities . . . . . (insert a summary of transportation facilities providing access from the site, including information about their availability and limitations.

(d) . . . . . (insert other pertinent information).

(End of clause)

52.236-14 AVAILABILITY AND USE OF UTILITY SERVICES (APR 1984)

(a) The Government shall make all reasonably required amounts of utilities available to the Contractor from existing outlets and supplies, as specified in the contract. Unless otherwise provided in the contract, the amount of each utility service consumed shall be charged to or paid for by the Contractor at prevailing rates charged to the Government or, where the utility is produced by the Government, at reasonable rates determined by the Contracting Officer. The Contractor shall carefully conserve any utilities furnished without charge.

(b) The Contractor, at its expense and in a workmanlike manner satisfactory to the Contracting Officer, shall install and maintain all necessary temporary connections and distribution lines, and all meters required to measure the amount of each utility used for the purpose of determining charges. Before final acceptance of the work by the Government, the Contractor shall remove all the temporary connections, distribution lines, meters, and associated paraphernalia.

(End of clause)

52.246-21 WARRANTY OF CONSTRUCTION (MAR 1994)

(a) In addition to any other warranties in this contract, the Contractor warrants, except as provided in paragraph (i) of this clause, that work performed under this contract conforms to the contract requirements and is free of any defect in equipment, material, or design furnished, or workmanship performed by the Contractor or any subcontractor or supplier at any tier.

(b) This warranty shall continue for a period of 1 year from the date of final acceptance of the work. If the Government takes possession of any part of the work before final acceptance, this warranty shall continue for a period of 1 year from the date the Government takes possession.

(c) The Contractor shall remedy at the Contractor's expense any failure to conform, or any defect. In addition, the Contractor shall remedy at the Contractor's expense any damage to Government-owned or controlled real or personal property, when that damage is the result of--

(1) The Contractor's failure to conform to contract requirements; or

(2) Any defect of equipment, material, workmanship, or design furnished.

(d) The Contractor shall restore any work damaged in fulfilling the terms and conditions of this clause. The Contractor's warranty with respect to work repaired or replaced will run for 1 year from the date of repair or replacement.

(e) The Contracting Officer shall notify the Contractor, in writing, within a reasonable time after the discovery of any failure, defect, or damage.

(f) If the Contractor fails to remedy any failure, defect, or damage within a reasonable time after receipt of notice, the Government shall have the right to replace, repair, or otherwise remedy the failure, defect, or damage at the Contractor's expense.
(g) With respect to all warranties, express or implied, from subcontractors, manufacturers, or suppliers for work performed and materials furnished under this contract, the Contractor shall--

(1) Obtain all warranties that would be given in normal commercial practice;

(2) Require all warranties to be executed, in writing, for the benefit of the Government, if directed by the Contracting Officer; and

(3) Enforce all warranties for the benefit of the Government, if directed by the Contracting Officer.

(h) In the event the Contractor's warranty under paragraph (b) of this clause has expired, the Government may bring suit at its expense to enforce a subcontractor's, manufacturer's, or supplier's warranty.

(i) Unless a defect is caused by the negligence of the Contractor or subcontractor or supplier at any tier, the Contractor shall not be liable for the repair of any defects of material or design furnished by the Government nor for the repair of any damage that results from any defect in Government-furnished material or design.

(j) This warranty shall not limit the Government's rights under the Inspection and Acceptance clause of this contract with respect to latent defects, gross mistakes, or fraud.

(End of clause)

52.253-1 COMPUTER GENERATED FORMS (JAN 1991)

(a) Any data required to be submitted on a Standard or Optional Form prescribed by the Federal Acquisition Regulation (FAR) may be submitted on a computer generated version of the form, provided there is no change to the name, content, or sequence of the data elements on the form, and provided the form carries the Standard or Optional Form number and edition date.

(b) Unless prohibited by agency regulations, any data required to be submitted on an agency unique form prescribed by an agency supplement to the FAR may be submitted on a computer generated version of the form provided there is no change to the name, content, or sequence of the data elements on the form and provided the form carries the agency form number and edition date.

(h) If the Contractor submits a computer generated version of a form that is different than the required form, then the rights and obligations of the parties will be determined based on the content of the required form.

(End of clause)

252.225-7014 PREFERENCE FOR DOMESTIC SPECIALTY METALS (MAR 1998)

(a) Definitions.

As used in this clause--

(1) Qualifying country means any country set forth in subsection 225.872-1 of the Defense Federal Acquisition Regulation Supplement.

(2) Specialty metals means--

(i) Steel--

(A) Where the maximum alloy content exceeds one or more of the following limits: manganese, 1.65 percent; silicon, 0.60 percent; or copper, 0.60 percent; or

(B) That contains more than 0.25 percent of any of the following elements: aluminum, chromium, cobalt, columbium, molybdenum, nickel, titanium, tungsten, or vanadium;

(ii) Metal alloys consisting of nickel, iron-nickel, and cobalt base alloys containing a total of other alloying metals (except iron) in excess of 10 percent;

(iii) Titanium and titanium alloys; or

(b) The Contractor agrees that any specialty metals incorporated in articles delivered under this contract will be melted in the United States, its possessions, or Puerto Rico.

(c) This clause does not apply to the extent that--

(1) The Secretary or designee determines that a satisfactory quality and sufficient quantity of such articles cannot be acquired when needed at U.S. market prices;

(2) The specialty metal is melted in a qualifying country or is incorporated in an article manufactured in a qualifying country;

(3) The acquisition is necessary to comply with agreements with foreign governments requiring the United States to purchase supplies from foreign sources to offset sales made by the U.S. Government or U.S. firms under approved programs; or

(4) The specialty metal is purchased by a subcontractor at any tier.

(End of clause)

252.225-7030 RESTRICTION ON ACQUISITION OF CARBON, ALLOY, AND ARMOR STEEL PLATE (OCT 1992)

The Contractor agrees that all carbon, alloy, and armor steel plate in Federal supply class 9515, or described by American Society for Testing Materials (ASTM) or American Iron and Steel Institute (AISI) specifications, furnished as a deliverable under this contract, or purchased by the contractor as a raw material, for use in a Government-owned facility or facility under the control of the Department of Defense, shall be melted and rolled in the United States or Canada.

(End of clause)

SECTION 00110
SUBMISSION REQUIREMENTS AND INSTRUCTIONS

1. PROPOSALS

Proposals for the work described herein, will be received until the date and time indicated on Standard Form 1442 in Section 00010, at the following address:

U.S. Army Engineer District, Kansas City
757 Federal Building
601 East 12th Street
ATTN: CENWK-CT-C/Gulledge
Kansas City, Missouri 64106-2896

2. PROPOSAL FORMAT

a. The proposals (originals) shall be no more than 50 pages total all volumes. Pages in excess of 50 pages will not be evaluated. Proposals shall be submitted in the following format:

Proposal Document		Original	Copies
VOLUME 1, Part 1	-Technical	1	6
VOLUME 1, Part 2	- Subcontracting Plan	1	6
VOLUME 2	-Price	1	1

The information required by paragraph: INSTRUCTIONS TO OFFERORS—COMPETITIVE ACQUISITION, subparagraph ©(2), shall be included in Volume 1, before Part 1.

b. Proposal Characteristics.

(1) All text must be legible and easily read. The page size of the offeror's proposal shall not exceed 8-1/2 inch by 11 inch. Diagrams, charts and tables shall conform to the paper size. All text shall be typed single-spaced. Margins (1-inch) shall be clean and clear. If fold-out charts are unavoidable and are to be utilized, all sheets shall be reproduced on 11 inch by 17 inch, and folded to 8-1/2 inch by 11-inch sheet size with title clearly visible at bottom right corner. Each volume shall be contained within a 3-ring binder (no heat or spiral bound volumes).

Proposal Document		Original	Copies
VOLUME 1, Part 1	-Technical	1	6
VOLUME 1, Part 2	- Subcontracting Plan	1	6
VOLUME 2	-Price	1	1

(2) All proposals shall contain the requirements stated herein and every volume shall be identified by the volume number and name, address, and telephone number of the prime on the cover sheet. Each volume shall also contain a Table of Contents, List of Tables, List of Figures, List of Appendices, List of Acronyms and at the bottom left side of each page the volume number shall be included. The list of acronyms should include all acronyms appearing in the volume. The offeror's name, address, signature, and telephone number shall appear on any document to be evaluated.

(3) Proposal clarity, organization (as requested in this solicitation) and cross referencing is mandatory. No material shall be incorporated by reference. General cross-references or cross referencing guides will not be considered as appropriate cross-references. In order for the proposal to receive an in-depth evaluation, it is necessary that the proposal be presented in a manner that will provide clarity, organization and cross referencing as required.

(4) Each evaluation factor and sub factor in Volume 1 shall be described in a separate section, appropriately tabbed in a report form. The information in all volumes shall be concise. Elaborate presentations are not necessary or desirable.

(5) The offeror shall submit Section 00010 (including Standard Form 1442) of this solicitation with his prices. Offerors may be required to provide complete cost and pricing data and certification or information other than cost or pricing data at a later date if needed to adequately evaluate price proposals.

3. PROPOSAL CONTENT

a. The Government intends to award a contract based on initial proposals received, without discussion of such proposals, to the offeror providing the **lowest price technically acceptable proposal** to the government as evaluated using applicable factors. Accordingly, each initial proposal should be submitted on the most favorable terms from a price and technical standpoint that the offeror can submit to the Government. However, the Government may request additional information from offerors of proposals, which clarifies, supplements and/or changes, any proposal as submitted. The government may conduct discussions with the offeror.

b. Each offeror's ability to perform the work set forth in this solicitation will be evaluated on the basis of his knowledge and understanding of the work, the quality provided by his total proposal and his capability and responsibility to accomplish the project. The evaluation will be based on the offeror's proposal. While knowledge of the RFP requirements is a prerequisite to preparing proposals, restatement of the RFP requirements shall be avoided. Proposals shall emphasize knowledge and understanding of work performance, not work identification.

c. The following factors and subfactors will be used to evaluate each proposal.

FACTOR 1. Past Performance. Past performance information may be obtained from other than the sources identified by the offeror, to include past performance evaluations in the Construction Contractors Appraisal Support System (CCASS).

Provide Performance Evaluation within the last ten (10) years for government or private contracts that have been completed or are currently on-going but the original completion date is past that were executed by the offeror as a prime contractor. The total number of questionnaires submitted should be at least 10 but not more than 15. The Past Performance Evaluation Questionnaire along with a sample transmittal letter, are located at the end of this section and must be completed by personnel for whom the offeror has performed work. These Performance Evaluations must be provided by the offeror to persons who have knowledge of this information on past performance. Once completed, these evaluations must be sent directly to the address in paragraph: PROPOSALS, above, by the persons completing these evaluations. The offeror may also e-mail the questionnaires to the references for the past/current contract. References may then electronically complete the questionnaire and e-mail it to Gregg C. Gulledge, Contract Specialist GreggC.Gulledge@nwk02.usace.army.mil. E-mailed or mailed questionnaires must be received by the Government no later than the closing date of the RFP. Questionnaires received after the closing rate of the RFP will be discarded and will not be evaluated.

The offeror shall not review the Performance Evaluations after they have been completed, and the persons completing these evaluations shall be informed that the Government will hold their names confidential. At no time during the evaluation process, debriefings or after award, will the names of the individuals providing reference information about an offeror's past performance is revealed to the offeror or to any other party.

The Performance Evaluations should clearly identify the proposer's identity and the project or portion of a project being evaluated. It is helpful to give your evaluators a short synopsis of the project or portion of a project that you wish them to evaluate. It is also helpful to include an SASE or overnight delivery envelope addressed to the address found in paragraph: PROPOSALS, and inform the evaluators to forward the evaluation in a timely manner. It is the proposer's responsibility to ensure that evaluators have completed and forwarded the evaluation in a timely manner. Those Performance Evaluations not received in a timely manner will be discarded and will not be evaluated.

In addition, the offeror will provide the following information in the proposal, Volume 1, about these ten projects:

(a) Title, location and contract number.

(b) Dates of contract execution (start and completion).

(c) Contracting agency.

(d) At least two current points of contact (names, current phone and fax numbers).

(e) SF 294s, where available. If the project was done for a non-federal organization, information normally provided on a SF 294 shall be provided in letter format.

(f) Brief description of the circumstances surrounding the following as they apply and any corrective action taken to preclude recurrence:

(i) Contract termination, in whole or in part.

(ii) Failure to complete awarded work.

(iii) Liquidated damages or actual damages assessed for delay in meeting completion dates.

(g) Brief descriptions of the project to include size and location.

The following <u>subfactors</u> will be evaluated by the Government:

. **Quality of Product and Services. Reviews how well the offeror has complied with contract requirements in the past and conformance with standards of good workmanship.**

. Customer Satisfaction. Reviews how satisfied prior customers and end users are with the offeror's completed work. Includes the willingness of prior customers to do business with the offeror again if given the choice.

. Timeliness of Performance. Reviews how well the contractor has adhered to contract schedules.

Extent of subcontracting to small businesses, small disadvantaged businesses, and women-owned businesses.

FACTOR 2. Corporate Experience. All offerors shall submit corporate experience within the last five (5) years for their firm and any proposed bridge subcontractors showing construction experience of two or more 2 lane multi-span bridges with pier construction.

FACTOR 3. Schedule. All offerors shall submit the Proposal Schedule, as found in Specifications Section 01100 GENERAL. The Proposal Schedule will be evaluated in accordance with paragraphs: BASIS FOR AWARD, EVALUATION FACTORS, and PRICE.

FACTOR 4. Quality Control Management Program (QCMP). Offerors shall submit a Quality Control Plan as stated in this solicitation as well as a complete and comprehensive discussion of quality control to support the performance requirements of this contract.

FACTOR 5. Support for Small Business and Small Disadvantaged Business. All items in the sample Subcontracting Plan format provided in this Section must be discussed in the Subcontracting Plan submitted. Proposers must not give cursory answers or discussions to the issues that must be addressed in the Subcontracting Plan; full and complete information is required.

Small businesses are not required to submit a Subcontracting Plan nor the additional past utilization information stated above. Small businesses will NOT be penalized nor their overall evaluation impacted by the Government's evaluation of subcontracting efforts on the part of large businesses. Subcontracting will be part of the trade off process in the best value determination by the Government and may be used as a final discriminator when comparing competing large businesses.

The goals identified in the offeror's subcontracting plan will be compared to the current goals of the Corps of Engineers which are listed on the subcontracting plan format provided. Subcontracting plans that do not meet these goals must provide a narrative justification for the goals proposed.

d. ADDITIONAL INFORMATION TO BE PROVIDED IN VOLUME 3:

- The Offer (the SF1442) duly executed with an original signature by an official authorized to bind the company.
- Acknowledgement of all amendments to the solicitation in accordance with the instructions on the Standard Form 30 (amendment form).
- The completed Section 00600 of the solicitation (Representations and Certifications).
- For joint ventures, the information required by paragraph "Joint Ventures."

JOINT VENTURES

Joint ventures shall submit the following additional documentation regarding their business entities:

- A certified copy of their Joint Venture agreement.

- A detailed statement outlining the following in terms of percentages, where appropriate.

- The relationship of the joint venture parties in terms of business ownership, capital contribution, and profit distribution or loss sharing.

- The management approach of the joint venture in terms of who will conduct, direct, supervise and control the project and have custody and control of the assets of the joint venture and perform the duties necessary to complete the work.

- The structure of the joint venture and decision-making responsibilities of the joint venture parties in terms of who will control the manner and method of performance of the work.

- The bonding responsibilities of the joint venture parties.

- Identification of the key personnel having authority to legally bind the joint venture to subcontracts and state who will provide or contract for the labor and materials for the joint venture.

- Identification of party maintaining the joint venture bank accounts for the payment of all expenses and the deposits of all receipts, keep the books and records, and pay applicable taxes for the joint venture.

- Identification of party furnishing the facilities, such as office supplies and telephone service.

- Identification of party having overall control of the joint venture.

Other sections of the proposal shall identify, where appropriate, whether key personnel are employees of the individual joint venture parties and identify the party, or hired as employees of the joint venture.

If one of the joint venture parties possesses experience and/or past performance as a Federal Government contractor or as a Corps of Engineers contractor, that experience and/or past performance will be included as the experience and/or past performance of the joint venture.

SAMPLE TRANSMITTAL LETTER
AND
PAST PERFORMANCE EVALUATION QUESTIONNAIRE

Date: _____

To: _____
_____
_____

We have listed your firm as a reference for work we have performed for you as listed below. Our firm will be submitting a proposal under a project advertised by the U.S. Army Corps of Engineers, Kansas City District. In accordance with Federal Acquisition Regulations (FAR), an evaluation of our firm's past performance will be completed by the Corps of Engineers. Your candid response to the attached questionnaire will assist the evaluation team in this process.

We understand that you have a busy schedule and your participation in this evaluation is greatly appreciated. Please complete the enclosed questionnaire as thoroughly as possible. Space is provided for comments. Understand that while the responses to this questionnaire may be released to the offeror, FAR 15.306 (e)(4) prohibits the release of the names of the persons providing the responses. Complete confidentiality will be maintained. Furthermore, a questionnaire has also been sent to _____ of your organization. Only one response from each office is required. If at all possible, we suggest that you individually answer this questionnaire and then coordinate your responses with that of _____, to forge a consensus on one overall response from your organization.

Please send your completed questionnaire to the following address:

U.S. Army Engineer District, Kansas City
ATTN: CENWK-CT-C/Gregg C. Gulledge
757 Federal Building
601 East 12th Street
Kansas City, Missouri 64016-2896

The questionnaires can also be faxed to 816-426-5169 or e-mailed to Gregg.C.Gulledge@usace.army.mil.

If you have questions regarding the attached questionnaire, or require assistance, please contact Mr. Gulledge at (816) 983-3808. Thank you for your assistance.

PAST PERFORMANCE EVALUATION QUESTIONNAIRE

Upon completion of this form, please send directly to the U.S. Army Corps of Engineers in the enclosed addressed envelope, fax to 816-426-5777, ATTN: Gregg C. Gulledge, or e-mail to Gregg.C.Gulledge@usace.army.mil. Do not return this form to the contractor's offices. Thank you.

1. Contractor/Name & Address (City and State):

2. Type of Contractor: ____ Construction _____ Design _____ Design Build

3. Type of Contract: Fixed Price _____ Cost Reimbursement _____
Other (Specify) _____

4. Title of Project/Contract Number: _____
_____

5. Description of Work: (Attach additional pages as necessary)

6. Complexity of Work: High _____ Mid _____ Routine _____

7. Location of Work: _____

8. Date of Award: _____

9. Status: Active _____ (provide percent complete)
Complete _____ (provide completion date)

10. Name, address and telephone number of Contracting Officer's Technical Representative:

11. Name, Title, Address and Telephone Number of Individual completing survey:

12. Date Questionnaire Completed: _____

Please note: Adverse remarks will be provided to contractors in the competitive range for award for response in accordance with Federal Acquisition Regulation requirements. The contracting office will not however, provide your name or copies of this questionnaire to the contractor or any other party not directly involved in the evaluation of the contractor's proposal. Your response to this questionnaire must be received in the contracting office no later than the closing date of the RFP. Questionnaires received after this date will be discarded and will not be evaluated. The evaluation team, if they so choose, may call you for clarification or additional information.

Please answer each of the following questions. **If the rating is other than average or satisfactory please provide additional information in the remarks section.**

QUALITY OF PRODUCT/SERVICE:

1. Evaluate the contractor's performance in complying with contract requirements, quality achieved and overall technical expertise demonstrated.

Excellent Quality	Above Average Quality	Average Quality	Below Average Quality	Unsuccessful or Experienced Significant Quality Problems

Remarks:

2. To what extent were the contractor's reports and documentation accurate, complete and submitted in a timely manner?

Excellent Quality	Above Average Quality	Average Quality	Below Average Quality	Unsuccessful or Experienced Significant Quality Problems

Remarks:

3. To what extent was the contractor able to solve contract performance problems without extensive guidance from government/owner counterparts?

Excellent	Above Average	Average	Below Average	Unsuccessful

Remarks:

4. How well did the contractor manage and coordinate subcontractors, suppliers, and the labor force?

Excellent	Above Average	Average	Below Average	Unsuccessful

Remarks:

CUSTOMER SATISFACTION:

5. To what extent were the end users satisfied with:

	Quality?	Cost?	Schedule?
Exceptionally satisfied			
Highly satisfied			
Satisfied			
Somewhat Dissatisfied			
Highly dissatisfied			

Remarks:

6. If given the opportunity, would you work with this contractor again?

Yes _____ No _____ Not Sure _____

Remarks:

TIMELINESS OF PERFORMANCE:

7. To what extent did the contractor meet the contract schedule?

Completed substantially ahead of schedule	
Completed work on schedule with no time delays	
Completed work on schedule, with minor delays under extenuating circumstances	
Experienced significant delays without justification	

Remarks:

8. If work was not completed on schedule, were Liquidated Damages, or other similar penalties assessed?

_____ Yes _____ No

Remarks:

9. If work was completed ahead of schedule, were incentives paid to the contractor?

_____ Yes _____ No

Remarks:

SUBCONTRACTING TO SMALL BUSINESSES

10. Did the contractor partner or have a mentor/protégée relationship with SB/SDB/WOSB as part of this contract?

Yes _____ No _____ Mentor/Protégée Not Allowed _____

Remarks:

OTHER REMARKS:

11. Use the space below to provide other information related to the contractor's performance. This may include the contractor's selection and management of subcontractors, effectiveness of their small/small disadvantaged business subcontracting plan, flexibility in dealing with contract challenges, their overall concern for the Government's interest (if applicable), project awards received, etc.

Section 110 Subcontracting

NOTICE TO OFFERORS

If your firm is a large business and your bid exceeds $500,000 or more for services or $1,000,000 for construction, your attention is directed to the following provisions contained in the solicitation:

52.219-8, Utilization of Small, Small Disadvantaged and Women-Owned Business Concerns (Alternate I)
52.219-9, Small, Small Disadvantaged and Women-Owned Small Business Subcontracting Plan (Alternate I)

52.219-16, Liquidated Damages - Small Business Subcontracting Plan
52.226-1, Utilization of Indian Organizations and Indian-Owned Economic Enterprises

For your information, the United Army Corps of Engineers considers the following goals reasonable and achievable for fiscal year and during the performance of the resultant contract.

a. 61.4% of planned subcontracting dollars will be placed with all small business concerns.

b. 9.1% of planned subcontracting dollars will be placed with those small business concerns owned and controlled by socially and economically disadvantaged individuals.

c. 5% of planned subcontracting dollars will be placed with those small business concerns owned and controlled by women.

d. 3% of planned subcontracting dollars will be placed with those small business concerns owned and controlled by service disabled veterans.

e. There are no established goals for planned subcontracting dollars placed with those small business concerns owned and controlled by certified Hubzone concerns, small business concerns owned and controlled by veterans, and Historic Black Colleges and/or Minority Institutions, however, subcontracting with these concerns is highly encouraged.

Goals included in any proposed subcontracting plan should be at least equal to those indicated above. If lesser goals are proposed, you must substantiate how the proposed plan represents the firm best effort to comply with the terms and conditions of the solicitation. Offerors are highly encouraged to become familiarize with the intent of the solicitation provisions and the elements of the subcontracting plan.

The subcontracting plan must contain, at a minimum, the elements set forth in solicitation provision 52.219-9. Proposed plans will be reviewed to ensure the plan represents the firm's best efforts to maximize subcontracting opportunities for small, small disadvantaged and women-owned businesses. Subcontracting plans require Contracting Officer approval prior to contract award.

Should the selected offeror fail to submit an acceptable subcontracting plan within the time limit prescribed by the Contracting Officer, the offeror will be considered ineligible for award. The approved subcontracting plan (to include goals) will become a material part of the contract. An example of a format of a subcontracting plan is attached for your information. The attached ***plan is an example only*** and should not be construed as the only acceptable subcontracting plan format. Any format will be acceptable provided the plan addresses each element as required by the Federal Acquisition Regulations and its supplements.

Should you have any questions or need assistance in developing your plan, please contact the assigned Contract Specialist or the District's Deputy for Small Business at 816-983-3927 or fax your inquiries to 816-426-2979.

SMALL, SMALL DISADVANTAGED AND WOMEN-OWNED
SMALL BUSINESS SUBCONTRACTING PLAN
EXAMPLE

DATE: _____

CONTRACTOR: _____

ADDRESS: _____

PHONE NO: _____

PROJECT TITLE: _____

SOLICITATION NO: _____

CONTRACT NO: _____

1. In accordance with the contract clauses at 52.219-8 and 52.219-9, *(name of contractor)* submits the following Subcontracting Plan for Small, Small Disadvantaged, and Women-owned Business Concerns.

2. Subcontracting goals for this contract:

a. Total contract amount is $_____.

b. Total dollars planned to be subcontracted (to all types of businesses): $_____.

Type of Subcontractor	Amount Planned to be Subcontracted	Percentage of Subcontracted Dollars
Large Business		%
Small Businesses		%
- Small Disadvantaged*		%
- Small Women-Owned		%
- Small Service Disabled Veterans Owned		%
- Small Veteran Owned		%
HubZone Concern		%
Historical Black College and Minority Institution		%
Total		100%

***NOTE:** *Women-owned businesses are not considered a small disadvantaged business. Do not include subcontract awards to women-owned businesses in your calculations unless the firm meets the definition of a small disadvantaged business.*

3. The principal items or areas we will subcontract under this contract are *(NOTE:* ***Construction contractors remember to include materials/supplies*** *when developing plan. Also, list each subcontracted task by Division and Section number):*

_____

a. Of the items or areas stated in 3; we plan to subcontract the following to Small Businesses:

_____

b. Of the items or areas stated in 3.a; we plan to subcontract the following to Small Disadvantaged Businesses:

_____

c. Of the items or areas stated in 3.a; we plan to subcontract the following to Small Women-Owned Businesses:

_____

d. Of the items or areas stated in 3.a; we plan to subcontract the following to Small Service Disabled Veterans-Owned Businesses:

_____

e. Of the items or areas stated in 3.a; we plan to subcontract the following to Small Veteran-Owned Businesses:

_____

g. Of the items or areas stated in 3; we plan to subcontract the following to Hub Zone concerns:

_____

g. Of the items or areas stated in 3; we plan to subcontract the following to Historically Black Colleges and Minority Institutions:

_____

*****NOTE: SEE LAST PAGE IF THIS SOLICITATION HAS OPTIONS** (delete this statement from your plan)*****

4. Provide a description of the method your firm used to develop the subcontracting goals in paragraph 2:

_____

_____

_____

_____

_____

5. Indirect costs were ( ) were not ( ) used in establishing subcontracting goals. ***If indirect costs are included in your goals, furnish a description of the method used to determine the proportionate share of indirect costs to be incurred with (i) small business concerns (ii) small disadvantaged business concerns and (iii) women-owned.***

6. The following individual will administer this Subcontracting Plan on behalf of (name of contractor):

Name: Title:

Address:

Telephone:

The aforementioned individual's specific duties will include, but is not limited to:

a. Developing and maintaining source lists of small, small disadvantaged and women-owned small business concerns. Sources used are the Small Business Administration's Procurement Automated Source System (PASS), the National Minority Purchasing Council Vendor Information Service, Minority Business Development Agency, US Department of Commerce, Local Minority Business Development Centers, Economic Development Centers, and National Center for American Indian Enterprise Development.

b. Assuring the inclusion of small, small disadvantaged, and women-owned small business concerns in all solicitations for products or services which they are capable of providing; and ensuring that all solicitations are structured to permit the maximum possible participation by small, small disadvantaged and women-owned small business concerns.

c. Establishing and maintaining records of all subcontract awards to ensure appropriate documentation of non-selection of bids submitted by a small, small disadvantaged business, or women-owned small business concerns.

d. Preparing and submitting the Subcontracting Report for Individual Contracts (SF 294) and the Summary Subcontract Report (SF 295) in accordance with instructions provided, and coordinating and preparing for all compliance reviews by Federal agencies.

e. Promoting activities necessary to further the intent of the subcontracting plan. Activities include motivational training of purchasing personnel; attendance at workshops, seminars and trade fairs conducted by or on behalf of small business and/or small disadvantaged and/or women-owned small business concerns; and general cooperation with members of the small, small disadvantaged and women-owned small business concerns or their representatives.

7. The following steps will be taken to ensure that small, small disadvantaged, and women-owned small business concerns receive notice of and have an equitable opportunity to compete for intended awards of subcontracts and/or purchase orders for the products and/or services describe in paragraph 4 above:

a. Sources will be requested through SBA's PASS system, business development organizations, minority and small business trade associations and at small, minority and women-owned small business procurement conferences; sources will be contacted; and bidding materials will be provided to all responding parties expressing an interest.

b. The firm will conduct and maintain internal motivational training to guide and encourage purchasing personnel to maintain source lists and guides to small, small disadvantaged, and women-owned small business concerns. Purchasing activities will be monitored to ensure sufficient time is allowed for interested offerors to prepare bids and to ensure continuous compliance with the approved Subcontracting Plan.

8. *[Name of contractor]* agrees that the clause entitled "Utilization of Small, Small Disadvantaged and Women-Owned Business Concerns" will be included in all subcontracts that offer further subcontracting opportunities. All subcontractors, except small business concerns, who receive subcontracts in excess of $500,000 ($1,000,000 in the case of construction) will be required to adopt a plan similar to this one. Such plans will be reviewed to assure that all minimum requirements of an acceptable subcontracting plan have been satisfied.

The acceptability of proposed goals shall be determined on a cases-by-case basis depending on the supplies/services involved, the availability of potential small, small disadvantaged, and women-owned subcontractors, and prior experience. Once approved and implemented, plans will be monitored through the submission of periodic reports or, as time and availability of funds permit, periodic visits to subcontractors facilities to review applicable records and subcontracting program progress.

9. The Firm agrees to submit periodic reports and cooperate in any studies or surveys required by the Contracting Activity or Small Business Administration to determine the extent of the firm compliance with the subcontracting plan.

10. *(Name of Contractor)* agrees to maintain at least the following types of records to document compliance with the Subcontracting Plan:

a. The names of all organizations, agencies, and associations contacted for small, small disadvantaged, and women-owned small business sources, along with records of attendance at conference, seminars and trade fairs where additional sources were developed.

b. Source lists, guides, and other data identifying small business concerns, small disadvantaged business concerns and women-owned small business concerns.

c. Records of subcontracts award in excess of $100,000 will demonstrate how small business concerns, small disadvantaged business concerns and women-owned business concerns were solicited or provide an explanation as to why these business concerns were not considered for subcontracting opportunities.

d. Records of subcontract award data to include subcontractor's name and address, to be kept on a contract-by-contract basis.

e. Minutes of internal motivational and training meetings held for the guidance and encouragement of purchasing personnel, and records of all monitoring activities performed for compliance evaluation.

f. Copies of SF 294 and SF 295 showing date and place of filing and copies of all other reports or results of reviews conducted by the contracting agency or other interested agencies of the Federal government to monitor our compliance with this Subcontracting Plan.

11. *(Name of Contractor)* will submit a SF 295, Summary Subcontract Report, on Corps of Engineers projects only. The SF 295 shall be completed and distributed in accordance with the Corps of engineers Supplemental Instructions. *(Name of Contractor)* will not report Corps of Engineers projects through any other Agency unless authorized by the Contracting Officer.

Contractor's Signature:_____

Typed Name:_____

Title:_____

Date:_____

This Plan is Accepted By:

_____
Contracting Officer

Date:_____

NOTE: *If this solicitation has options, the plan must contain separate goals for* ***each*** *option. EXAMPLE:*

1. Option #_____

a. Total contract amount is $_____.

b. Total dollars planned to be subcontracted (to all types of businesses): $_____.

Type of Subcontractor	Amount Planned to be Subcontracted	Percentage of Subcontracted Dollars
Large Business		%
Small Businesses		%
- Small Disadvantaged*		%
- Small Women-Owned		%
- Small Service Disabled Veterans Owned		%
- Small Veteran Owned		%
HubZone Concern		%
Historical Black College and Minority Institution		%
Total		100%

SECTION 00120
PROPOSAL EVALUATION AND CONTRACT AWARD

1. PROPOSAL EVALUATION

The factors for consideration in the evaluation of proposal received in response to this solicitation are as follows:

FACTOR 1 PAST PERFORMANCE. The government may obtain past performance information from sources other than those identified by the offeror, including but not limited to past performance evaluations in the Construction Contractors Appraisal Support System (CCASS).

The Government will evaluate the following subfactors:

a. **Quality of Product and Services**. Reviews how well the offeror has complied with contract requirements in the past and conformance with standards of good workmanship. The minimum acceptable level for quality is a rating of **Average** on similar projects.

b. **Customer Satisfaction**. Reviews how satisfied prior customers and end users are with the offeror's completed work. Includes the willingness of prior customers to do business with the offeror again if given the choice. The minimum acceptable level is a rating of **Above Average** in customer satisfaction on similar projects.

c. **T timeliness of Performance.** Reviews how well the contractor has adhered to contract schedules. The proposal will not be considered technically acceptable unless it demonstrates that at a minimum, the prime contractor (and the bridge subcontractor, if the bridge will be constructed by a subcontractor) complete projects on schedule unless excused by extenuating circumstances. For projects that are not yet complete, the proposal must demonstrate that critical path milestones have been met unless excused by extenuating circumstances. Offerors with no past performance history will not be penalized; however; such offerors must have a bridge subcontractor with past performance history that meets this minimum requirement.

FACTOR 2 – CORPORATE EXPERIENCE: At a minimum, the proposal must demonstrate that within the past five years the offeror, or the bridge subcontractor, if there is one, has satisfactorily constructed to substantial completion two or more 2 lane multi-span bridges with pier construction. Proposals that fail to meet this minimum requirement will not be considered technically acceptable.

FACTOR 3 – SCHEDULE: This factor considers the offeror's capability to execute this work in a timely manner. Offerors shall submit milestone dates required by this solicitation and additional critical milestone dates for major work items, which will reflect the offeror's planned sequence of execution to develop the most expeditious completion date for this project. A minimum of twenty (20) critical path milestones shall be provided with the offeror's proposal. Offerors shall use durations, not calendar dates, to describe their schedule. (For example: "The offeror will complete task XX within 10 days after the government issues notice to proceed.") **The schedule submitted by the Offeror shall be made a part of the contract upon award.**

a. EXECUTION OF WORK TASKS: At a minimum, the proposal must demonstrate that the offeror can meet the schedule in the solicitation. Proposals that fail to demonstrate this will not be considered technically acceptable. The schedule is contained in Specifications Section 01100 GENERAL.

b. NETWORK ANALYSIS: Milestones must be based upon a network analysis, which satisfies the requirements of this solicitation.

c. REASONABLENESS OF DATES: Project completion date or intermediate milestones which are not reasonable or realistic will result in the proposal being considered not technically unacceptable.

FACTOR 4 - QUALITY CONTROL MANAGEMENT PROGRAM (QCMP)

a. Quality Control: The Offeror must provide a complete and comprehensive discussion of quality control to support the performance requirements of Specifications Section ***01451*** of this RFP. This information shall include, but not be limited to, the following items:
   1) Describe the process by which the QC staff will monitor work in the field and how action is to be taken to correct deficiencies.
   2) Describe the process by which the QC staff will work with government quality assurance personnel and the Contracting Officer to insure timely action is taken on deficiencies or quality problems in the field.
   3) Describe the procedures by which submittals will be processed and managed.
   4) It shall not be dependent on the contractor's other internal management plans.

The Offeror must indicate how it intends to incorporate the Three Phase Inspection process to provide seamless integration with the Quality Assurance Operations performed by the Government. Proposals that fail to provide an acceptable QCMP as required in this factor will not be considered for award.

FACTOR 5: SUPPORT FOR SMALL BUSINESS AND SMALL DISADVANTAGED BUSINESS:

The subcontracting plan shall be submitted as part of the offeror's technical proposal. The subcontracting plan must contain, at a minimum, the elements set forth in solicitation provision 52.219-9. Proposed plans will be reviewed to ensure the plan represents the firm's best effort to maximize subcontracting opportunities for small, small disadvantaged and women-owned businesses. Subcontracting plans require Contracting Officer approval prior to contract award.

Should the selected offeror fail to submit an acceptable subcontracting plan within the time limit prescribed by the Contracting Officer, the offeror will be considered ineligible for award.

NOTE: All offerors must provide a complete list of all subcontractors that will be employed at this project. Particular attention should be addressed if the subcontractor should be utilized for any phase of work on the bridge. The Prime Contractor shall only use those subcontractors stipulated in their subcontracting plan. Any change in subcontractors shall require the written approval of the Contracting Officer.

2. EVALUATION PROCESS

Proposals will first be evaluated on the 5 technical factors listed herein. Those offers that are found to be technically acceptable on all 5 factors will be evaluated on price. The Government intends to make award to the technically acceptable proposal that offers the lowest price.

3. BASIS FOR AWARD

The Government will award a firm-fixed-price contract to that responsible Offeror whose proposal, conforming to the solicitation, is fair and reasonable, and been determined to be most advantageous to the Government. Award will be made to the **lowest price technically acceptable** offer in accordance with FAR 15.504.

4. PAST PERFORMANCE

In the course of evaluating offerors' proposals, the Source Selection Evaluation Board may contact references submitted by the offeror. The SSEB may also check past performance information obtained from sources other than

those identified by the offeror. All gathered information will be used to evaluate the offeror's overall past performance.

Sheer numbers of confirmed negative comments may not give the offeror an overall rating of less than satisfactory. Negative comments in areas that are not of vital importance to the successful performance of this contract may not result in a rating of less than satisfactory. Conversely, one or only a few negative confirmed comments in areas of vital importance to the successful performance of this contract may render an overall past performance rating less than satisfactory.

During the evaluation, the following will also be taken into consideration: the age and relevance of past performance information; the offeror's overall work record; if there are any problems identified, the number, type, and severity of the problems and the effectiveness of corrective actions taken.

At no time during this process, nor during the debriefing, nor after award, will the names of the individuals providing reference information about an offeror's past performance be revealed to the offerors or to any other party. Offerors may be afforded the opportunity to respond to adverse comments made by references in accordance with guidelines identified in FAR Part 15.3. In this case, comments will be extracted and provided to the offeror. Copies of the questionnaires will not be furnished to the offeror and will remain confidential.

During the evaluation process the SSA may also consider past performance information in evaluating overall risk associated with a particular proposal. (No ranking in this process)

5. SMALL, SMALL DISADVANTAGED AND WOMEN-OWNED BUSINESS SUBCONTRACTING PLAN

The Government will evaluate the Subcontracting Plan in accordance with Appendix CC, Subcontracting Plan Evaluation Guide, of the Army Federal Acquisition Regulation Supplement (AFARS) by the Small Business Specialist on the SSEB.

As stated in paragraph PROPOSAL CONTENT, FACTOR 5 small businesses are not required to submit a Subcontracting Plan nor the additional past utilization information stated above. Small businesses will NOT be penalized nor their overall evaluation impacted by the Government's evaluation of subcontracting efforts on the part of large businesses. Small Businesses will automatically be considered "technically acceptable" on this factor. Subcontracting will be part of the trade off process in the determination by the Government and may be used as a final discriminator when comparing competing large businesses.

The goals proposed will be evaluated against the current Corps of Engineer goals, which are listed on the blank format provided. Goals that do not meet COE goals will significantly affect the offeror's evaluation results unless adequately supported by narrative justification.

6. DEBRIEFING

In accordance with FAR 15.505 Preaward Debriefing of Offerors, and FAR 15.506 Postaward Debriefing of Offerors, the offeror should be aware of the following.

PREAWARD DEBRIEFING OF OFFERORS (FAR 15.505)

Selections may be made without discussions.

(a)(1) The offeror may request a preaward debriefing by submitting a written request for debriefing to the Contracting Officer within 3 days after receipt of the notice of exclusion from the competition.

(2) At the offeror's request, this debriefing may be delayed until after award. If the debriefing is delayed until after award, it shall include all information normally provided in a postaward debriefing (see 15.506(d)). Debriefings delayed pursuant to this paragraph could affect the timeliness of any protest filed subsequent to the debriefing.

(3) If the offeror does not submit a timely request, the offeror need not be given either a preaward or a postaward debriefing. Offerors are entitled to no more than one debriefing for each proposal.

(b) The Contracting Officer shall make every effort to debrief the unsuccessful offeror as soon as practicable, but may refuse the request for a debriefing if, for compelling reasons, it is not in the best interests of the Government to conduct a debriefing at that time. The rationale for delaying the debriefing shall be documented in the contract file. If the Contracting Officer delays the debriefing, it shall be provided no later than the time postaward debriefings are provided under 15.506. In that event, the Contracting Officer shall include the information at 15.506(d) in the debriefing.

(c) Debriefings **shall be done, in writing**, or by any other method acceptable to the Contracting Officer.

The Contracting Officer should normally chair any debriefing session held. Individuals who conducted the evaluations shall provide support.

At minimum, preaward debriefings shall include--

(1) The agency's evaluation of significant elements in the offeror's proposal;

(2) A summary of the rationale for eliminating the offeror from the competition; and

(3) Reasonable responses to relevant questions about whether source selection procedures contained in the solicitation, applicable regulations, and other applicable authorities were followed in the process of eliminating the offeror from the competition.

Preaward debriefings shall not disclose--

The number of offerors;

The identity of other offerors;

The content of other offerors' proposals;

The ranking of other offerors;

The evaluation of other offerors; or

Any of the information prohibited in 15.506(e).

An official summary of the debriefing shall be included in the contract file.

POSTAWARD DEBRIEFING OF OFFERORS FAR 15.506

(a)(1) An offeror, upon its written request received by the agency within 3 days after the date on which that offeror has received notification of contract award in accordance with 15.503(b), shall be debriefed and furnished the basis for the selection decision and contract award.

(2) To the maximum extent practicable, the debriefing should occur within 5 days after receipt of the written request. Offerors that requested a postaward debriefing in lieu of a preaward debriefing, or whose debriefing was delayed for compelling reasons beyond contract award, also should be debriefed within this time period.

(3) An offeror that was notified of exclusion from the competition (see 15.505(a)), but failed to submit a timely request, is not entitled to a debriefing.

(4)(i) Untimely debriefing requests may be accommodated.

(ii) Government accommodation of a request for delayed debriefing pursuant to 15.505(a)(2), or any untimely debriefing request, does not automatically extend the deadlines for filing protests. Debriefings delayed pursuant to 15.505(a)(2) could affect the timeliness of any protest filed subsequent to the debriefing.

(b) Debriefings of successful and unsuccessful offerors may be done orally, in writing, or by any other method acceptable to the Contracting Officer.

(c) The Contracting Officer should normally chair any debriefing session held. (Individuals who conducted the evaluations shall provide support.)

At a minimum, the debriefing information shall include--

(1) The Government's evaluation of the significant weaknesses or deficiencies in the offeror's proposal, if applicable;

(2) The overall evaluated price (including unit prices), and technical rating, if applicable, of the successful offeror and the debriefed offeror, and past performance information on the debriefed offeror;

(3) The overall ranking of all offerors, when any ranking was developed by the agency during the source selection;

(4) A summary of the rationale for award;

(5) For acquisitions of commercial items, the make and model of the item to be delivered by the successful offeror; and

(6) Reasonable responses to relevant questions about whether source selection procedures contained in the solicitation, applicable regulations, and other applicable authorities were followed.

(e) The debriefing shall not include point-by-point comparisons of the debriefed offeror's proposal with those of other offerors. Moreover, the debriefing shall not reveal any information prohibited from disclosure by 24.202 or exempt from release under the Freedom of Information Act (5 U.S.C. 552) including--

(1) Trade secrets;

Privileged or confidential manufacturing processes and techniques;

(3) Commercial and financial information that is privileged or confidential, including cost breakdowns, profit, indirect cost rates, and similar information; and

(4) The names of individuals providing reference information about an offeror's past performance.

(f) An official summary of the debriefing shall be included in the contract file.

GENERAL DECISION MO020001 02/14/03 MO1

General Decision Number MO020001

Superseded General Decision No. MO010001

State: Missouri

Construction Type:
HEAVY
HIGHWAY

County(ies):
STATEWIDE

HEAVY AND HIGHWAY CONSTRUCTION PROJECTS

Modification Number	Publication Date
0	03/01/2002
1	04/12/2002
2	05/03/2002
3	05/10/2002
4	05/24/2002
5	06/07/2002
6	07/05/2002
7	08/09/2002
8	09/06/2002
9	11/08/2002
10	12/20/2002
11	01/17/2003
12	01/24/2003
13	02/14/2003

COUNTY(ies):
STATEWIDE

CARP0007M 04/01/2001

	Rates	Fringes
CASS (Richards-Gebauer AFB ONLY), CLAY, JACKSON, PLATTE AND RAY COUNTIES		
CARPENTERS & PILEDRIVERS	25.50	6.88

CARP0008C 05/01/1999

	Rates	Fringes
ST. LOUIS COUNTY AND CITY		
CARPENTERS	26.49	5.69

CARP0011A 05/01/2001

	Rates	Fringes
CARPENTERS & PILEDRIVERS:		
JEFFERSON AND ST. CHARLES COUNTIES	26.29	5.40
FRANKLIN COUNTY	23.78	5.40
WARREN COUNTY	23.78	5.40

LINCOLN COUNTY	23.39	5.40
PIKE, ST. FRANCOIS AND WASHINGTON COUNTIES	22.44	5.40
BUCHANAN, CLINTON, JOHNSON AND LAFAYETTE COUNTIES	22.68	5.99
ATCHISON, ANDREW, BATES, CALDWELL, CARROLL, DAVIESS, DEKALB, GENTRY, GRUNDY, HARRISON, HENRY, HOLT, LIVINGSTON, MERCER, NODAWAY, ST. CLAIR, SALINE AND WORTH COUNTIES	22.03	5.99
BARRY, BARTON, CAMDEN, CEDAR, CHRISTIAN, DADE, DALLAS, DOUGLAS, GREENE, HICKORY, JASPER, LACLEDE, LAWRENCE, MCDONALD, NEWTON, OZARK, POLK, STONE, TANEY, VERNON, WEBSTER AND WRIGHT COUNTIES	21.68	5.99
CRAWFORD, DENT, GASCONADE, IRON, MADISON, MARIES, MONTGOMERY, PHELPS, PULASKI, REYNOLDS, SHANNON, AND TEXAS COUNTIES	21.73	5.40
RALLS,MARION, LEWIS, CLARK AND SCOTLAND COUNTIES	21.88	5.40
BENTON, MORGAN AND PETTIS COUNTIES	21.83	6.24
ADAIR, AUDRAIN, BOONE, CALLAWAY, CHARITON, COLE, COOPER, HOWARD, KNOX, LINN, MACON, MILLER, MONITEAU, MONROE, OSAGE, PUTNAM, RANDOLPH, SCHUYLER, SHELBY AND SULLIVAN	23.13	6.24
BOLLINGER, BUTLER, CAPE GIRARDEAU, DUNKLIN, MISSISSIPPI, NEW MADRID, PEMISCOT, PERRY, STE. GENEVIEVE, SCOTT, STODDARD AND WAYNE COUNTIES	22.46	4.72
CARTER, HOWELL, OREGON AND RIPLEY COUNTIES	21.54	4.72

ELEC0001B 06/01/2002

	Rates	Fringes
BOLLINGER, BUTLER, CAPE GIRARDEAU, CARTER, DUNKLIN, FRANKLIN, IRON, JEFFERSON, LINCOLN, MADISON, MISSISSIPPI, NEW MADRID, PEMISCOT, PERRY,REYNOLDS, RIPLEY, ST. CHARLES, ST. FRANCOIS, ST. LOUIS (City and County), STE. GENEVIEVE, SCOTT, STODDARD, WARREN, WASHINGTON AND WAYNE COUNTIES		
ELECTRICIANS	29.20	15.64

ELEC0002D 09/02/2001

	Rates	Fringes
ADAIR, AUDRAIN, BOONE, CALLAWAY, CAMDEN, CARTER, CHARITON, CLARK, COLE, COOPER, CRAWFORD, DENT, FRANKLIN, GASCONADE, HOWARD, HOWELL, IRON, JEFFERSON, KNOX, LEWIS, LINCON, LINN, MACON, MARIES, MARION, MILLER, MONITEAU, MONROE, MONTGOMERY, MORGAN, OREGON, OSAGE, PERRY, PHELPS, PIKE, PULASKI, PUTNAM, RALLS,		

RANDOLPH, REYNOLDS, RIPLEY, ST. CHARLES, ST. FRANCOIS, ST. LOUIS (City and County), STE. GENEVIEVE, SCHUYLER, SCOTLAND, SHANNON, SHELBY, SULLIVAN, TEXAS, WARREN AND WASHINGTON COUNTIES.

LINE CONSTRUCTION:

Lineman & Cable Splicer	27.48	42% + 2.10
Groundman Equipment Operator	24.60	42% + 2.10
Groundman Winch Driver	20.22	42% + 2.10
Groundman, Groundman Driver	19.47	42% + 2.10

ELEC0053F 08/27/2000

	Rates	Fringes

BATES, BENTON, CARROLL, CASS, CLAY, HENRY, JACKSON, JOHNSON, LAFAYETTE, PETTIS, PLATTE, RAY, AND SALINE COUNTIES.

LINE CONSTRUCTION:

Lineman	27.80	9.99
Lineman Operator	25.97	9.46
Groundman Powderman	19.45	7.59
Groundman	18.49	7.31

ANDREW, ATCHINSON, BARRY, BARTON, BUCHANAN, CALDWELL, CEDAR, CHRISTIAN, CLINTON, DADE, DALLAS, DAVIESS, DE KALB, DOUGLAS, GENTRY, GREENE, GRUNDY, HARRISON, HICKORY, HOLT, JASPER, LACLEDE,

LAWRENCE, LIVINGSTON, McDONALD, MERCER, NEWTON, NODAWAY, OZARK, POLK, ST. CLAIR, STONE, TANEY, VERNON, WEBSTER, WORTH, AND WRIGHT COUNTIES.

LINE CONSTRUCTION:

Lineman	26.75	9.69
Lineman Operator	25.41	9.30
Groundman Powderman	18.69	7.37
Groundman	17.30	6.98

ELEC0095C 06/01/2001

	Rates	Fringes

BARRY, BARTON, CEDAR, CRAWFORD, DADE, JASPER, LAWRENCE, MCDONALD, NEWTON, ST CLAIR, AND VERNON COUNTIES

ELECTRICIANS:

Electricians	20.51	5.68
Cable Splicers	20.86	5.68

ELEC0124I 08/26/2002

	Rates	Fringes

BATES, BENTON, CARROLL, CASS, CLAY, COOPER, HENRY, JACKSON, JOHNSON, LAFAYETTE, MORGAN, PETTIS, PLATTE, RAY AND SALINE COUNTIES:

ELECTRICIANS	30.73	12.37

ELEC0257C 03/01/2002

	Rates	Fringes

AUDRAIN (Except, Cuivre Township), BOONE, CALLAWAY, CAMDEN, CHARITON, COLE, CRAWFORD, DENT, GASCONADE, HOWARD, MARIES, MILLER, MONITEAU, OSAGE, PHELPS AND RANDOLPH COUNTIES:

Electricians	22.50	11.395
Cable Splicers	23.50	11.395

ELEC0350B 12/01/2002

	Rates	Fringes

ADAIR, AUDRAIN (East of Highway 19), CLARK, KNOX, LEWIS, LINN, MACON, MARION, MONROE, MONTGOMERY, PIKE, PUTNAM, RALLS, SCHUYLER, SCOTLAND, SHELBY AND SULLIVAN COUNTIES

ELECTRICIANS	24.25	10.241

ELEC0453D 09/01/2001

	Rates	Fringes

CHRISTIAN, DALLAS, DOUGLAS, GREENE, HICKORY,HOWELL, LACLEDE, OREGON, OZARK,POLK,SHANNON, WEBSTER AND WRIGHT COUNTIES

ELECTRICIANS	20.85	5.37+10%

PULASKI AND TEXAS COUNTIES

ELECTRICIANS	25.50	5.37+10%

STONE AND TANEY COUNTIES

ELECTRICIANS	14.45	4.97+10%

ELEC0545D 06/01/2002

	Rates	Fringes

ANDREW, BUCHANAN, CLINTON, DEKALB, ATCHISON, HOLT, MERCER, GENTRY, HARRISON, DAVIESS, GRUNDY, WORTH, LIVINGSTON, NODAWAY, AND CALDWELL COUNTIES

ELECTRICANS	26.35	9.54

ELEC0702D 01/01/2002

	Rates	Fringes

BOLLINGER, BUTLER, CAPE GIRARDEAU, DUNKLIN, MADISON, MISSISSIPPI, NEW MADRID, PEMISCOT, SCOTT, STODDARD AND WAYNE COUNTIES

LINE CONSTRUCTION:		
Lineman	28.68	2.45+25.5%
Groundman Equipment Operator (all crawler type equipment D-4 and larger)	24.48	2.45+25.5%
Groundman - Class A	17.07	2.45+25.5%

ENGI0101A 05/01/2002

	Rates	Fringes

ANDREW, ATCHISON, BATES, BENTON, BUCHANAN, CALDWELL, CARROLL, CASS, CHARITON,CLINTON,COOPER, DAVIESS, DEKALB, GENTRY, GRUNDY, HARRISON, HENRY, HOLT,HOWARD, JOHNSON, LAFAYETTE,LINN,LIVINGSTON, MERCER, NODAWAY, PETTIS,SALINE, SULLIVAN AND WORTH COUNTIES

POWER EQUIPMENT OPERATORS		
GROUP 1	22.45	7.65
GROUP 2	22.05	7.65
GROUP 3	20.05	7.65

POWER EQUIPMENT OPERATORS CLASSIFICATIONS

GROUP 1: Asphalt roller operator, finish; asphalt paver and spreader; asphalt plant operator; auto grader or trimmer or sub-grader; backhoe; blade operator (all types); boilers - 2; booster pump on dredge; bulldozer operator; boring machine (truck or crane mounted); clamshell operator; concrete mixer paver; concrete plant operator; concrete pump operator; crane operator; derrick or derrick trucks; ditching machine; dragline operator; dredge engineman; dredge operator; drill cat with

compressor mounted (self-contained) or similar type self-propelled rotary drill (not air tract); drilling or boring machine (rotary-self-propelled); finishing machine operator; greaser; high loader-fork lift-skid loader (all types); hoisting engineer (2 active drums); locomotive operator (standard guage); mechanics and welders (field and plants); mucking machine operator; pile drive operator; pitman crane or boom truck (all types); push cat; quad track; scraper operators (all types); shovel operator; sideboom cats; side discharge spreader; skimmer scoop operators; slip form paver operator (CMI, Rex, Gomeco or equal); la tourneau rooter (all tiller types); tow boat operator; truck crane; wood and log chippers (all types).

GROUP 2: A-frame truck operator; articulated dump truck; back filler operator; boilers (1); chip spreader; churn drill operator; compressor; concrete mixer operator, skip loader; concrete saws (self-propelled); conveyor operator; crusher operator; distributor operator; elevating grader operator; farm tractor (all attachments); fireman rig; float operator; form grade operator; hoisting engine (one drum); maintenance operator; multiple compactor; pavement breaker, self-propelled hydra-hammer (or similar type); paymill operator; power shield; pumps; roller operator (with or without blades); screening and washing plant; self-propelled street broom or sweeper; siphons and jets; straw blower; stump cutting machine; siphons and jets; tank car heater operator (combination boiler and booster); welding machine; vibrating machine operator (not hand held); welding machine.
GROUP 3: Oiler; oiler driver; mechanic.

HOURLY PREMIUMS:
THE FOLLOWING CLASSIFICATIONS SHALL RECEIVE ($ .25) ABOVE GROUP 1 RATE: Dragline operator - 3 yds. & over; shovel 3 yds. & over; clamshell 3 yds. & over; Crane, rigs or piledrivers, 100' of boom or over (incl. jib.), hoist - each

additional active drum over 2 drums

THE FOLLOWING CLASSIFICATIONS SHALL RECEIVE ($ .50) ABOVE GROUP 1 RATE: Tandem scoop operator; crane, rigs or piledrivers 150' to 200' of boom (incl. jib.)

THE FOLLOWING CLASSIFICATIONS SHALL RECEIVE ($ .75) ABOVE GROUP 1 RATE: Crane rigs, or piledrivers 200 ft. of boom or over (including jib.)

ENGI0101E 04/01/2002

	Rates	Fringes
CASS, CLAY, JACKSON,PLATTE AND RAY COUNTIES		
POWER EQUIPMENT OPERATORS:		
GROUP 1	23.79	8.97
GROUP 2	22.75	8.97
GROUP 3	18.28	8.97
GROUP 4	21.63	8.97

POWER EQUIPMENT OPERATORS CLASSIFICATIONS

GROUP 1: Asphalt roller operator, finish; asphalt paver and spreader; asphalt plant operator; auto grader or trimmer or sub-grader; backhoe; blade operator (all types); boilers-2; booster pump on dredge; boring machine (truck or crane mounted); bulldozer operator; clamshell operator; concrete cleaning decontamination machine operator; concrete mixer paver; concrete plant operator; concrete pump operator; crane operator; derrick or derrick trucks; ditching machine; dragline operator; dredge engineman; dredge operator; drillcat with compressor mounted (self-contained) or similar type self propelled rotary drill (not air tract); drilling or boring machine (rotary - self-propelled); finishing machine operator; greaser; heavy equipment robotics operator/mechanic; horizontal directional drill operator; horizontal directional drill locator; loader-forklift - skid loader (all types); hoisting engineer (2 active drums); locomotive operator (standard guage); master environmental maintenance mechanic; mechanics and welders (field and plants); mucking machine operator; piledrive operator; pitman crane or boom truck (all types); push cat; quad-track; scraper operators (all types); shovel operator; side discharge spreader; sideboom cats; skimmer scoop operator; slip-form paver (CMI, REX, Gomaco or equal); la tourneau rooter (all tiller types); tow boat operator; truck crane; ultra high perssure waterjet cutting tool system operator/mechanic; vacuum blasting machine operator/mechanic; wood and log chippers (all types)

GROUP 2: "A" Frame truck operator; articulated dump truck; back filler operator; boilers (1); chip spreader; churn drill operator; concrete mixer operator, skip loader; concrete saws (self-propelled); conveyor operator; crusher operator; distributor operator; elevating grader operator; farm tractor (all attachments); fireman rig; float operator; form grader operator; hoisting engine (1 drum); maintenance operator;

multiple compactor; pavement breaker, self-propelled hydra-hammer (or similar type); power shield; paymill operator; pumps; siphons and jets; stump cutting machine; tank car heater operator (combination boiler and booster); compressor; roller operator (with or without blades); screening and washing plant; self-propelled street broom or sweeper; straw blower; tank car heater operator (combination boiler and booster); vibrating machine operator (not hand held)

GROUP 3: Oilers

GROUP 4: Oiler Driver (All Types)

FOOTNOTE:

HOURLY PREMIUMS

FOLLOWING CLASSIFICATIONS SHALL RECEIVE ($.25) ABOVE GROUP 1 RATE: Clamshells - 3 yd. capacity or over; Cranes or rigs, 80 ft. of boom or over (including jib); Draglines, 3 yd. capacity or over; Piledrivers 80 ft. of boom or over (including jib); Shovels & backhoes, 3 yd. capacity or over.

ENGI0101J 05/01/2002

	Rates	Fringes
BARRY, BARTON, CAMDEN, CEDAR, CHRISTIAN, DADE, DALLAS, DOUGLAS, GREENE, JASPER, LAWRENCE, HICKORY, LACLEDE, MCDONALD, NEWTON, OZARK, POLK, ST. CLAIR, STONE, TANEY, VERNON, WEBSTER AND WRIGHT COUNTIES and CITY OF SPRINGFIELD		
POWER EQUIPMENT OPERATORS		
GROUP 1	20.37	6.50
GROUP 2	20.02	6.50
GROUP 3	19.82	6.50
GROUP 4	17.77	6.50

POWER EQUIPMENT OPERATORS CLASSIFICATIONS

GROUP 1: Asphalt finishing machine & trench widening spreader; asphalt plant console operator; autograder; automatic slipform paver; backhoe; blade operator - all types; boat operator - tow; boilers-2; central mix concrete plant operator; clamshell operator; concrete mixer paver; crane operator; derrick or derrick trucks; ditching machine; dozer operator; dragline operator; dredge booster pump; dredge engineman; dredge operator; drill cat with compressor mounted on cat; drilling or boring machine rotary self-propelled; highloader; hoisting engine - 2 active drums; launch hammer wheel; locomotive operator; - standard guage; mechanic and welders; mucking machine; off-road trucks; piledriver operator; pitman crane operator; push cat operator; quad trac; scoop operator - all types; shovel operator; sideboom cats; skimmer scoop operators; trenching machine operator; truck crane.

GROUP 2: A-frame; asphalt hot-mix silo; asphalt plant fireman (drum or boiler); asphalt plant man; asphalt plant man; asphalt plant mixer operator; asphalt roller operator; backfiller operator; barber-greene loader; boat operator (bridges and dams); chip spreader; concrete mixer operator - skip loader; concrete

plant operator; concrete pump operator; crusher operator; dredge oiler; elevating grader operator; fork lift; greaser-fleet; hoisting engine - 1; locomotive operator - narrow gauge; multiple compactor; pavement breaker; powerbroom - self-propelled; power shield; rooter; side discharge concrete spreader; slip form finishing machine; stumpcutter machine; throttle man; tractor operator (over 50 h.p.); winch truck.

GROUP 3: Boilers - 1; chip spreader (front man); churn drill operator; clef plane operator; concrete saw operator (self-propelled); curb finishing machine; distributor operator; finishing machine operator; flex plane operator; float operator; form grader operator; pugmill operator; roller operator, other than high type asphalt; screening & washing plant operator; siphons & jets; sub-grading machine operator; spreader box operator, self-propelled (not asphalt); tank car heater operator

(combination boiler & booster); tractor operator (50 h.p. or less); Ulmac, Ulric or similar spreader; vibrating machine operator, not hand;

GROUP 4: Grade checker; Oiler; Oiler-Driver

HOURLY PREMIUMS:
The following classifications shall receive $ .25 above GROUP 1 rate: Clamshells - 3 yds. or over; Cranes - Rigs or Piledrivers, 100 ft. of boom or over (including jib); Draglines - 3 yds. or over; Hoists - each additional active drum over 2 drums; Shovels - 3 yds. or over;

The following classifications shall receive $ .50 above GROUP 1 rate: Tandem scoop operator; Cranes - Rigs or Piledrivers, 150 ft. to 200 ft. of boom (including jib); Tandem scoop.

The following classifications shall receive $ .75 above GROUP 1 rate: Cranes - Rigs or Piledrivers, 200 ft. of boom or over (including jib.).

ENGI0513D 05/06/2002

	Rates	Fringes
FRANKLIN, JEFFERSON, LINCOLN, ST CHARLES, AND WARREN COUNTIES		
POWER EQUIPMENT OPERATORS:		
GROUP 1	24.92	12.24
GROUP 2	23.62	12.24
GROUP 3	20.62	12.24
GROUP 4	23.17	12.24

POWER EQUIPMENT OPERATORS CLASSIFICATIONS

GROUP 1: Backhoe, Cable; Backhoe, Hydraulic (2 cu yds bucket and under regardless of attachment, one oiler for 2 or 3, two oilers for 4 through 6); Backhoe, Hydraulic over 2 cu yds; Cableway; Crane, Crawler or Truck; Crane, Hydraulic - Truck or Cruiser mounted, 16 tons and over; Crane, Locomotive; crane with boom including jib over 100 ft from pin to pin; Crane using rock

socket tool; Derrick, Steam; Derrick Car and Derrick Boat; Dragline, 7 cu yds and over; Dredge; Gradall, Crawler or tire mounted; Locomotive, Gas, Steam & other powers; Pile Driver, Land or Floating; Scoop, Skimmer; Shovel, Power (Electric, Gas, Steam or other powers); Shovel, Power (7 cu yds and over); Switch Boat; Whirley; Air Tugger with air compressor; Anchor Placing Barge; Asphalt Spreaker; Athey Force Feeder Loader, self-propelled; Backfilling Machine; Boat Operator - Push Boat or Tow Boat (job site); Boiler, High Pressure Breaking in Period; Boom Truck, Placing or Erecting; Boring Machine, Footing Foundation; Bullfloat; Cherry Picker; Combination Concrete Hoist and Mixer (such as Mixermobile); Compressor, Two 125 CFM and under; Compressor, Two through Four over 125 CFM; Compressor when operator runs throttle; Concrete Breaker (Truck or Tractor mounted); Concrete Pump (such as Pumpcrete machine); Concrete Saw

(self-propelled); Concrete Spreader; Conveyor, Large (not selfpropelled) hoisting or moving brick and concrete into, or into and on floor level, one or both; Crane, Cimbing (such as Linden); Crane, Hydraulic - Rough Terrain, self-propelled; Crane, Hydraulic - Truck or Cruiser mounted - under 16 tons; Drilling machine - Self-powered, used for earth or rock drilling or boring (wagon drills and any hand drills obtaining power from other souces including concrete breakers, jackhammers and Barco equipmnet no engineer required); Elevating Grader; Engine Man, Dredge; Excavator or Powerbelt Machine; Finishing Machine, self-propelled oscillating screed; Forklift; Generators, Two through Six 30 KW or over; Grader, Road with power blade; Greaser; Highlift; Hoist, Concrete and Brick (Brick cages or concrete skips operating or on tower, Towermobile, or similar equipment); Hoist, Three or more drums in use; Hoist, Stack; Hydro-Hammer; Lad-A-Vator, hoisting brick or concrete; Loading Machine such as Barber-Greene; Mechanic on job site

GROUP 2: Air Tugger with plant air; Boiler (for power or heating shell of building or temporary enclosures in connection with construction work); Boiler, Temporary; Compressor, One over 125 CFM; Compressor, truck mounted; Conveyor, Large (not self-propelled); Conveyor, Large (not self- propelled) moving brick and concrete (distributing) on floor level; Curb Finishing Machine; Ditch Paving Machine; Elevator (outside); Endless Chain Hoist; Fireman (as required); Form Grader; Hoist, One Drum regardless of size (except brick or concrete); Lad-A-Vator, other hoisting; Manlift; Mixer, Asphalt, over 8 cu ft capacity; Mixer, one bag capacity or less; Mixer, without side loader, two bag capacity or more; Mixer, with side loader, regardless of size, not Paver; Mud Jack (where mud jack is used in conjenction with an air compressor, operator shall be paid $ .55 per hour in addition to his basic hourly rate for covering both operations); Pug Mill operator; Pump, Sump - self powered, automatic controlled over 2"; Scissor Lift (used for hoisting); Skid Steer Loader; Sweeper, Street; Tractor, small wheel type 50 HP and under with grader blade and similar equipment; Welding Machine, One over 400 amp; Winch, operating from truck

GROUP 3: Boat operator - outboard motor, job site; Conveyors (such as Con-Vay-It) regardless of how used; Elevator (inside);

Heater operator, 2 through 6; Sweeper, Floor

GROUP 4: Crane type

HOURLY PREMIUMS:
Backhoe, Hydraulic 2 cu yds or less without oiler - $2.00; Certified Crane Operator - $1.50; Certified Hazardous Material Operator $1.50; Crane,climbing (such as Linden) - $.50; Crane, Pile Driving and Extracting - $ .50 Crane with boom (including job) over 100 ft from pin to pin - add $.01 per foot to maximum of $4.00); Crane, using rock socket tool - $ .50; Derrick, diesel, gas or electric hoisting material and erecting steel (150 ft or more above ground) - $ .50; Dragline, 7 cu yds and over - $ .50; Hoist, Three or more drums in use - $ .50; Scoop,

Tandem - $.50; Shovel, Power - 7 cu yds and over - $ .50; Tractor, Tandem Crawler - $ .50; Tunnel, man assigned to work in tunnel or tunnel shaft - $ .50; Wrecking, when machines are working on second floor or higher - $ .50

ENGI0513G 05/01/2002

	Rates	Fringes
ADAIR, AUDRAIN, BOLLINGER, BOONE, BUTLER, CALLAWAY, CAPE GIRARDEAU, CARTER, CLARK, COLE, CRAWFORD, DENT, DUNKLIN, GASCONADE, HOWELL, IRON, KNOX, LEWIS, MACON, MADISON, MARIES, MARION, MILLER, MISSISSIPPI, MONITEAU, MONROE, MONTGOMERY, MORGAN, NEW MADRID, OREGON, OSAGE, PEMISCOT, PERRY, PHELPS, PIKE, PULASKI, PUTNAM, RALLS, RANDOLPH, REYNOLDS, RIPLEY, ST. FRANCOIS, STE. GENEVIEVE, SCHUYLER, SCOTLAND, SCOTT, SHANNON, SHELBY, STODDARD, TEXAS, WASHINGTON, AND WAYNE COUNTIES		
POWER EQUIPMENT OPERATORS		
GROUP 1	21.35	12.23
GROUP 2	21.00	12.23
GROUP 3	20.80	12.23
GROUP 4	17.15	12.23

POWER EQUIPMENT OPERATORS CLASSIFICATIONS

GROUP 1: Asphalt finishing machine & trench widening spreader, asphalt plant console operator; autograder; automatic slipform paver; back hoe; blade operator - all types; boat operator tow; boiler two; central mix concrete plant operator; clam shell operator; concrete mixer paver; crane operator; derrick or derrick trucks; ditching machine; dozer operator; dragline operator; dredge booster pump; dredge engineman; dredge operator; drill cat with compressor mounted on cat; drilling or boring machine rotary self-propelled; highloader; hoisting engine 2 active drums; launchhammer wheel; locomotive operator standrad guage; mechanics and welders; mucking machine; piledriver operator; pitman crane operator; push cat operator; guad-trac; scoop operator; sideboom cats; skimmer scoop operator; trenching machine operator; truck crane, shovel operator.

GROUP 2: A-Frame; asphalt hot-mix silo; asphalt roller operator asphalt plant fireman (drum or boiler); asphalt plant man;

asphalt plant mixer operator; backfiller operator; barber-greene loader; boat operator (bridge & dams); chip spreader; concrete mixer operator skip loader; concrete plant operator; concrete pump operator; dredge oiler; elevating graded operator; fork lift; grease fleet; hoisting engine one; locomotive operator narrow guage; multiple compactor; pavement breaker; powerbroom self-propelled; power shield; rooter; slip-form finishing machine; stumpcutter machine; side discharge concrete spreader; throttleman; tractor operator (over 50 hp); winch truck; asphalt roller operator; crusher operator.

GROUP 3: Spreader box operator, self-propelled not asphalt; tractor operator (50 h.p. or less); boilers one; chip spreader (front man); churn drill operator; compressor over 105 CFM 2-3

pumps 4" & over; 2-3 light plant 7.5 KWA or any combination thereof; clef plane operator; compressor maintenance operator 2 or 3; concrete saw operator (self-propelled); curb finishing mancine; distributor operator; finishing machine operator; flex plane operator; float operator; form grader operator; pugmill operator; riller operator other than high type asphalt; screening & washing plant operator; siphons & jets; subgrading machine operator; tank car heater (combination boiler & booster); ulmac, ulric or similar spreader; vibrating machine operator; hydrobroom.

GROUP 4: Oiler; grout machine; oiler driver; compressor over 105 CFM one; conveyor operator one; maintenance operator; pump 4" & over one.

FOOTNOTE:
HOURLY PREMIUMS
Backhoe hydraulic, 2 cu. yds. or under without oiler - $2.00 Certified Crane Operator - $1.50; Certified Hazardous Material Operator $1.50; Crane, climbing (such as Linden) - $0.50; Crane, pile driving and extracting - $0.50; Crane, with boom (including jib) over 100' from pin to pin add $0.01 per foot to maximum of $4.00; Crane, using rock socket tool - $0.50; Derrick, diesel, gas or electric, hoisting material and erecting steel (150' or more above the ground) - $0.50; Dragline, 7 cu. yds, and over - $0.50; Hoist, three or more drums in use - $0.50; Scoop, Tandem - $0.50; Shovel, power - 7 cu. yds. or more - $0.50; Tractor, tandem crawler - $0.50; Tunnel, man assigned to work in tunnel or tunnel shaft - $0.50; Wrecking, when machine is working on second floor or higher - $0.50;

ENGI0513H 05/01/2002

	Rates	Fringes
ST. LOUIS CITY AND COUNTY		
POWER EQUIPMENT OPERATORS:		
GROUP 1	24.92	12.24
GROUP 2	24.92	12.24
GROUP 3	23.02	12.24
GROUP 4	20.02	12.24

GROUP 5 19.56 12.24

POWER EQUIPMENT OPERATORS CLASSIFICATIONS

GROUP 1: Backhoe, cable or hydraulic; cableway; crane, crawler or truck; crane, hydraulic-truck or cruiser mounted 16 tons & over; crane locomotive; derrick, steam; derrick car & derrick boat; dragline; dredge; gradall, crawler or tire mounted; locomotive, gas, steam & other powers; pile driver, land or floating; scoop, skimmer; shovel, power (steam, gas, electric, or other powers); switch boat; whirley.

GROUP 2: Air tugger w/air compressor; anchor-placing barge; asphalt spreader; athey force feeder loader (self-propelled); backfilling machine; backhoe-loader; boat operator-push boat or tow boat (job site); boiler, high pressure breaking in period; boom truck, placing or erecting; boring machine, footing foundation; bull-float; cherry picker; combination concrete hoist & mixer (such as mixer mobile); compressor (when operator runs throttle); concrete breaker (truck or tractor mounted); concrete pump, such as pump-crete machine; concrete saw (self-propelled), concrete spreader; conveyor, large (not self-propelled), hoisting or moving brick and concrete into, or into and on floor level, one or both; crane, hydraulic-rough terrain, self-propelled; crane hydraulic-truck or cruiser mounted-under 16 tons; drilling machines, self-powered use for earth or rock drilling or boring (wagon drills and any hand drills obtaining power from other sources including concrete breakers, jackhammers and barco equipment-no engineer required); elevating grader; engineman, dredge; excavator or powerbelt machine; finishing machine, self-propelled oscillating screed; forklift; grader, road with power blade; highlift; greaser; hoist, stack, hydro-hammer; loading machine (such as barber-greene); machanic, on job site; mixer, pipe wrapping machines; plant asphalt; plant, concrete producing or ready-mix job site; plant heating-job site; plant mixing-job site; plant power, generating-job site; pumps, two through six self-powered over 2"; pumps, electric submersible, two through six, over 4"; quad-track; roller, asphalt, top or sub-grade; scoop, tractor drawn; spreader box; sub-grader; tie tamper; tractor-crawler, or wheel type with or without power unit, power take-offs and attachments regardless of size; trenching machine; tunnel boring machine; vibrating machine automatic, automatic propelled; welding machines (gasoline or diesel) two through six; well drilling machine

GROUP 3: Conveyor, large (not self-propelled); con-; veyor, large (not self-propelled) moving brick and concrete distributing) on floor level; mixer two or more mixers of one bag capacity or less; air tugger w/plant air; boiler, for power or heating on construction projects; boiler, temporary; compressor (mounted on truck; curb

finishing machine; ditch paving machine; elevator; endless chain hoist; form grader; hoist, one drum regardless of size; lad-a-vator; manlift; mixer, asphalt, over 8 cu. ft. capacity, without side loader, 2 bag capacity or more; mixer, with side loader, regardless of size; pug mill operator; pump, sump-self-powered, automatic controlled over 2" during use in connection with construction work; sweeper, street; welding machine, one over 400 amp.; winch operating from truck; scissor lift (used for hoisting); tractor, small wheel type 50 h.p. & under with grader blade & similar equipment

GROUP 4: Boat operator-outboard motor (job site); conveyor (such as con-vay-it) regardless of how used; sweeper, floor

GROUP 5: Oiler on dredge and on truck crane.

HOURLY PREMIUMS:

Backhoe, hydraulic 2 cu. yds. or under without oiler	$2.00
Certified Crane Operator	1.50
Certified Hazardous Material Operator	1.50
Crane, climbing (such as Linden)	.50
Crane, pile driving and extracting	.50
Crane, with boom (including jib) over 100' (from pin to pin) add $.01 per foot to maximum of	4.00
Crane, using rock socket tool	.50
Derrick, diesel, gas or electric, hoisting material and erecting steel (150' or more above ground)	.50
Dragline, 7 cu. yds. and over	.50
Hoist, three (3) or more drums in use	.50
Scoop, Tandem	.50
Shovel, power - 7 cu. yds. or more	.50
Tractor, tandem crawler	.50
Tunnel, man assigned to work in tunnel or tunnel shaft	.50
Wrecking, when machine is working on second floor or higher	.50

IRON0010M 04/01/2001

	Rates	Fringes
BUCHANAN, CASS, CLAY, JACKSON, JOHNSON, LAFAYETTE, PLATTE AND RAY Counties		
IRONWORKERS	22.70	11.63

ANDREW, ATCHISON, BARTON, BATES, BENTON, CALDWELL, CAMDEN, CARROLL, CEDER CHARITON, CHRISTIAN, CLINTON, COOPER, DADE, DALLAS, DAVIESS, DE KALB, GENTRY, GREENE, GRUNDY, HARRISON, HENRY, HICKORY, HOLT, HOWARD, LACLEDE, LINN, LIVINGSTON, MERCER, MONITEAU, MORGAN, NODAWAY, PETTIS, POLK, PUTNAM, RANDOLPH, ST. CLAIR, SALINE, SULLIVAN, TANEY, VERNON, WEBSTER, WRIGHT and WORTH Counties; and portions of ADAIR, BOONE, MACON, MILLER, and

RANDOLPH Counties

IRONWORKERS	19.70	11.63

IRON0321C 12/31/2002

	Rates	Fringes
DOUGLAS, HOWELL and OZARK COUNTIES		
IRONWORKERS	18.00	8.06

IRON0396D 07/31/2002

	Rates	Fringes
ST. LOUIS (City and County), ST. CHARLES, JEFFERSON, IRON, FRANKLIN, LINCOLN, WARREN, WASHINGTON, ST. FRANCOIS, STE. GENEVIEVE, and REYNOLDS Counties; and portions of MADISON, PERRY, BOLLINGER, WAYNE, and CARTER Counties		
IRONWORKERS	26.54	11.73

IRON0396I 08/01/2002

	Rates	Fringes
AUDRAIN, CALLAWAY, COLE, CRAWFORD, DENT, GASCONADE, MARIES, MONTGOMERY, OSAGE, PHELPS, PIKE, PULASKI, TEXAS, and WRIGHT Counties; and portions of CAMDEN, DOUGLAS, HOWELL, MILLER, OREGON, BOONE, SHANNON, LACLEDE, MONROE, and RALLS Counties		
IRONWORKERS	21.77	11.59

IRON0577F 06/01/2002

	Rates	Fringes
ADAIR, CLARK, KNOX, LEWIS, MACON, MARION, MONROE, RALLS, SCHUYLER, SCOTLAND, AND SHELBY COUNTIES		
IRONWORKERS	20.85	9.16

IRON0584E 06/01/2001

	Rates	Fringes
BARRY, JASPER, LAWRENCE, MCDONALD, NEWTON AND STONE Counties		
IRONWORKERS	18.20	7.87

IRON0782D 05/01/2002

	Rates	Fringes
CAPE GIRARDEAU, MISSISSIPPI, NEW MADRID, SCOTT, & STODDARD Counties; and portions of BOLLINGER, BUTLER, CARTER, DUNKLIN, MADISON, PEMISCOT, PERRY, RIPLEY, and WAYNE Counties		
IRONWORKERS: All Major River Work (Dams, Bridges): Projects $20 million		

or more	20.65	9.88
All Other Work	20.30	9.46

LABO0042C 03/04/2002

	Rates	Fringes
ST. LOUIS (City and County)		
LABORERS:		
Plumber Laborers	23.30	7.10

LABO0042H 03/06/2002

	Rates	Fringes
ST. LOUIS (City and County)		
LABORERS:		
Laborers, Flagperson	23.11	7.10
Wrecking	22.99	7.10
Dynamiter, Powderman	23.61	7.10

LABO0424B 05/01/2002

	Rates	Fringes
FRANKLIN COUNTY		
LABORERS		
GROUP 1	21.65	6.40
GROUP 2	22.25	6.40
JEFFERSON COUNTY		
LABORERS		
GROUP 1	21.70	6.40
GROUP 2	22.30	6.40
ADAIR, AUDRAIN, BOLLINGER, BOONE, BUTLER, CALLAWAY, CAPE GIRARDEAU, CARTER, CHARITON, CLARK, COLE, COOPER, CRAWFORD, DENT, DUNKLIN, GASCONADE, HOWARD, HOWELL, IRON, KNOX, LEWIS, LINN, MACON, MADISON, MARIES, MARION, MILLER, MISSISSIPPI, MONITEAU, MONROE, NEW MADRID, OREGON, OSAGE, PEMISCOT, PERRY, PHELPS, PIKE, PULASKI, PUTNAM, RALLS, RANDOLPH, REYNOLDS, RIPLEY, ST. FRANCOIS, STE. GENEVIEVE, SCHUYLER, SCOTLAND, SCOTT, SHANNON, SHELBY, STODDARD, SULLIVAN, TEXAS, WASHINGTON, AND WAYNE COUNTIES		
LABORERS		
GROUP 1	20.20	6.40
GROUP 2	20.80	6.40
LINCOLN, MONTGOMERY AND WARREN COUNTIES		
LABORERS		
GROUP 1	20.45	6.40
GROUP 2	21.05	6.40

LABORERS CLASSIFICATIONS

GROUP 1 - General laborer-flagman, carpenter tenders; salamander Tenders; Dump Man; Ticket Takers; loading trucks under bins,

hoppers, and conveyors; track man; cement handler; dump man on earth fill; georgie buggie man; material batch hopper man; spreader on asphalt machine; material mixer man (except on manholes); coffer dams; riprap pavers rock, block or brick; scaffolds over ten feet not self-supported from ground up; skip man on concrete paving; wire mesh setters on concrete paving; all work in connection with sewer, water, gas, gasoling, oil, drainage pipe, conduit pipe, tile and duct lines and all other pipe lines; power tool operator; all work in connection with hydraulic or general dredging operations; form setters, puddlers (paving only); straw blower nozzleman; asphalt plant platform man; chuck tender; crusher feeder; men handling creosote ties or creosote materials; men working with and handling epoxy material; topper of standing trees; feeder man on wood pulverizers, board and willow mat weavers and cabelee tiers on river work; deck hands; pile dike and revetment work; all laborers working on underground tunnels less than 25 ft. where compressed air is not used; abutement and pier hole men working six (6) ft. or more below ground; men working in coffer dams for bridge piers and footing in the river; barco tamper; jackson or any other similar tamp; cutting torch man; liners, curb, gutters, ditch lines; hot mastic kettlemen; hot tar applicator; hand blade operator; mortar men or brick or block manholes; rubbing concrete, air tool operator under 65 lbs.; caulker and lead man; chain or concrete saw under 15 h.p.; signal Gan; Guard rail and sign erectors.

GROUP 2 - Skilled laborers - Vibrator man; asphalt raker; head pipe layer on sewer work; batterboard man on pipe and ditch work; cliff scalers working from bosun's chairs; scaffolds or platforms on dams or power plants over 10 ft. high; air tool operator over 65 lbs.; stringline man on concrete paving; sandblast man; laser beam man; wagon drill; churn drill; air track drill and all other similar type drills, gunite nozzle man; pressure grout man; screed man on asphalt; concrete saw 15 h.p. and over; grade checker; strigline man on electronic grade control; manhole builder; dynamite man; powder man; welder; tunnel man; waterblaster - 1000 psi or over; asbestos and/or hazardous waste removal and/or disposal

---

LABO0579F 05/01/2001

	Rates	Fringes
BUCHANAN AND LAFAYETTE COUNTIES		
LABORERS		
GROUP 1	18.04	6.29
GROUP 2	18.39	6.29

ANDREW, ATCHISON, BARRY, BARTON, BATES, BENTON, CALDWELL, CAMDEN, CARROLL, CEDAR, CHRISTIAN, CLINTON, DADE, DALLAS, DAVIESS, DEKALB, DOUGLAS, GREENE, GENTRY, GRUNDY, HARRISON, HENRY, HICKORY, HOLT, JASPER, JOHNSON, LACLEDE, LAWRENCE, LIVINGSTON, MCDONALD, MERCER, MORGAN, NEWTON, NODAWAY, OZARK, PETTIS, POLK,

ST. CLAIR, SALINE, STONE, TANEY, VERNON, WEBSTER, WORTH AND WRIGHT COUNTIES.

LABORERS		
GROUP 1	16.69	6.04
GROUP 2	17.24	6.04

LABORERS CLASSIFICATIONS

GROUP 1: General Laborers - Carpenter tenders; salamander tenders; loading trucks under bins; hoppers & conveyors; track men & all other general laborers; air tool operator; cement handler-bulk or sack; dump man on earth fill; georgie buggie man; material batch hopper man; material mixer man (except on manholes); coffer dams; riprap pavers - rock, block or brick; signal man; scaffolds over ten feet not self-supported from ground up; skipman on concrete paving; wire mesh setters on concrete paving; all work in connection with sewer, water, gas, gasoline, oil drainage pipe, conduit pipe, tile and duct lines and all other pipe lines; power tool operator, all work in connection with hydraulic or general dredging operations; puddlers (paving only); straw blower nozzleman; asphalt plant platform man; chuck tender; crusher feeder; men handling creosote ties or creosote materials; men working with and handling epoxy material or materials (where special protection is required); rubbing concrete; topper of standing trees; batter board man on pipe and ditch work; feeder man on wood pulverizers; board and willow mat weavers and cable tiers on river work; deck hands; pile dike and revetment work; all laborers working on underground tunnels less than 25 feet where compressed air is not used; abutment and pier hole men working six (6) feet or more below ground; men working in coffer dams for bridge piers and footings in the river; ditchliners; pressure groutmen; caulker; chain or concrete saw; cliffscalers working from scaffolds, bosuns' chairs or platforms on dams or power plants over (10) feet above ground; mortarmen on brick or block manholes; toxic and hazardous waste work.

GROUP 2: Skilled Laborers - Head pipe layer on sewer work; laser beam man; Jackson or any other similar tamp; cutting torch man; form setters; liners and stringline men on concrete paving, curb, gutters; hot mastic kettleman; hot tar applicator; sandblasting and gunite nozzlemen; air tool operator in tunnels; screed man on asphalt machine; asphalt raker; barco tamper; churn drills; air track drills and all similar drills; vibrator man; stringline man for electronic grade control; manhole builders-brick or block; dynamite and powder men; grade checker.

LABO0660H 03/06/2002

	Rates	Fringes
ST. CHARLES COUNTY		
LABORERS:		
GROUP 1	22.37	6.49
GROUP 2	22.37	6.49

LABORERS CLASSIFICATIONS

GROUP 1: General laborer; carpenter tender; salamander tender; dump man; ticket takers; flagman; loading trucks under bins, hoppers, and conveyors; track men; cement handler; dump man on earth fill; Georgie buggie man; material batch hopper man; spreader on asphalt machine; material mixer man (except on manholes); coffer dams; riprap paver - rock, block, or brick; signal man; scaffolds over 10 ft not self-supported from ground up; skipman on concrete paving; wire mech setters on concrete paving; all work in connection with sewer, water, gas, gasoline, oil, drainage pipe, conduit pipe, tile and duct lines and all other pipe lines; power tool operator; all work in connection with hydraulic or general dredging operations; form setters; puddlers (paving only); straw blower nozzleman; asphalt plant platform man; chuck tender; crusher feeder; men handling creosote ties or creosote materials; men working with and handling epoxy material; topper of standing trees; feeder man on wood pulverizer; board and w llow mat weavers and cable tiers on river work; deck hands; pile dike and revetment work; all laborers working on underground tunnels less than 25 ft where compressed air is not used; abutment and pier hole men working 6 ft or more below ground; men working in coffer dams for bridge piers and footings in the river; Barco tamper, Jackson or any other similar tamp; cutting torch man; liners, curb, gutters, ditchliners; hot mastic kettleman; hot tar applicator; hand blade operators; mortar men on brick or block manholes; rubbing concrete; air tool operator under 65 pounds; caulker and lead man; chain saw under 15 hp; guard rail and sign erectors

GROUP 2: Vibrator man; asphalt raker; hand pipe layer on sewer work; batterboard man on pipe and ditch work; cliff scalers working from Bosun's chairs, scaffolds or platforms on dams or power plants over 10 ft high; air tool operator over 65 pounds; stringline man on concrete paving etc.; sand blast man; laser beam man; wagon drill; churn drill; air track drill and all other similar type drills; gunnite nozzle man; pressure grout man; screed man on asphalt; concrete saw 15 hp and over; grade checker; stringline man on electronic grade control; manhole builder; dynamite man; powder man; welder; tunnel man; waterblaster - 1000 psi and over; asbestos and/or hazardous waste removal and or disposal;

LABO0663D 04/01/2002

	Rates	Fringes
CASS, CLAY, JACKSON, PLATTE AND RAY COUNTIES		
LABORERS:		
GROUP 1	21.05	7.24
GROUP 2	22.14	7.24

LABORERS CLASSIFICATIONS

GROUP 1: General laborers, Carpenter tenders, salamander tenders, loading trucks under bins, hoppers and conveyors, track

men and all other general laborers, air tool operator, cement handler (bulk or sack), chain or concrete saw, deck hands, dump man on earth fill, Georgie Buggies man, material batch hopper man, scale man, material mixer man (except on manholes), coffer dams, abutments and pier hole men working below ground, riprap pavers rock, black or brick, signal man, scaffolds over ten feet not self-supported from ground up, skipman on concrete paving, wire mesh setters on concrete paving, all work in connection with sewer,water, gas, gasoling, oil, drainage pipe, conduit pipe, tile and duct lines and all other pipelines, power tool operator, all work in connection with hydraulic or general dredging operations, straw blower nozzleman,asphalt plant platform man, chuck tender, crusher feeder, men handling creosote ties on creosote materials, men working with and handling epoxy material or materials (where special protection is required), topper of standing trees, batter board man on pipe and ditch work, feeder man on wood pulverizers, board and willow mat weavers and cable tiers on river work, deck hands, pile dike and revetment work, all laborers working on underground tunnels less than 25 feet where compressed air is not used, abutment and pier hole men working six (6) feet or more below ground, men working in coffer dams for bridge piers and footings in the river, ditchliners, pressure groutmen, caulker and chain or concrete saw, cliffscalers working from scaffolds, bosuns' chairs or platforms on dams or power plants over (10) feet above ground, mortarmen on brick or block manholes, signal man.

GROUP 2: Skilled Laborer - spreader or screed man on asphalt machine, asphalt raker, grade checker, vibrator man, concrete saw over 5 hp., laser beam man, barco tamper, jackson or any other similar tamp, wagon driller, churn drills, air track drills and other similar drills, cutting torch man, form setters, liners and stringline men on concrete paving, curb, gutters and etc., hot mastic kettleman, hot tar applicator, hand blade operators, mortar men on brick or block manholes, sand blasting and gunnite nozzle men, rubbing concrete, air tool operator in tunnels, head pipe layer on sewer work, manhole builder (brick or block), dynamite and powder men.

PAIN0002B 09/01/2002

	Rates	Fringes
CLARK, FRANKLIN, JEFFERSON, LEWIS, LINCOLN, MARION, PIKE, RALLS, ST. CHARLES, ST. LOUIS (CITY & COUNTY), AND WARREN COUNTIES		
PAINTERS:		
Brush	24.93	7.50
Spray	26.93	7.50

PAIN0002G 04/17/2001

	Rates	Fringes
ADAIR, AUDRAIN, BOONE, CALLAWAY, CHARITON, COLE, GASCONADE,		

HOWARD, KNOX, LINN, MACON, MONROE, MONTGOMERY, OSAGE, PUTNAM, RANDOLPH, SCHUYLER, SCOTLAND, SHELBY AND SULLIVAN COUNTIES and the City of Booneville.

PAINTERS:

Brush, Roller, Paperhanger, Tapers	16.94	6.31
Tapers using Ames or comparable tools (bazooks, etc.)	17.19	6.31
Spray; Water Base Epoxy; Stage Under 50 ft.; Structural Steel (except for stairs and railings)	17.44	6.31
Sandblasting; Epoxy or Any Two Part Coating; Stage or Other Aerial Work Platforms Over 50 ft. high; Lead Abatement	17.94	6.31
Bridges, Dams, Locks or Powerhouses	18.94	6.31

PAIN0003D 04/01/2000

BATES, BENTON, CALDWELL, CARROLL, CASS, CLAY, CLINTON, COOPER, DAVIESS, GRUNDY, HARRISON, HENRY, JACKSON, JOHNSON, LAFAYETTE, LIVINGSTON, MERCER, MONITEAU, MORGAN, PETTIS, PLATTE, RAY AND SALINE COUNTIES

PAINTERS:

	Rates	Fringes
Brush & Roller; Taper	22.10	6.01
Bazooka; Paperhanger	22.60	6.01
Storage Bin & Tanks (Roller or Brush); Elevated Tanks (Roller or Brush); Stageman; Beltman; Bridgeman; Steelman; Sand Blast (Base); Elevator Shaft	22.85	6.01
Lead Abatement; Sprayman	23.10	6.01
Sandblast (Bridge, Stage, Erected Steel and Storage Bin and Tanks)	23.60	6.01
Sprayman (Storage Bin & Tanks, Elevated Tanks); Stageman (Spray); Bridgeman (Spray); Steelman (Spray)	23.85	6.01
Steeplejack (other than Elevated Tanks)	26.79	6.01
Steeplejack -Spray or Sandblast (other than Elevated Tanks)	27.79	6.01

PAIN0098B 05/01/2000

ANDREW, ATCHISON, BUCHANAN, DE KALB, GENTRY, HOLT, NODAWAY & WORTH COUNTIES

PAINTERS:

	Rates	Fringes
Brush & Roller	20.50	4.40
Sandblasters	21.50	4.40
Steeple Jack	23.50	4.40

PAIN0203B 04/01/1999

	Rates	Fringes
BARRY, BARTON, CEDAR, CHRISTIAN, DADE, DALLAS, DOUGLAS, GREENE, HICKORY, HOWELL, JASPER, LAWRENCE, MCDONALD, NEWTON, OZARK, POLK, ST. CLAIR, STONE, TANEY, VERNON, WEBSTER and WRIGHT COUNTIES		
PAINTERS:		
Sandblasters & Highman (over 40')	17.68	3.23
Painters	17.38	3.23
Tapers	16.47	3.21

PAIN1265C 07/01/2002

	Rates	Fringes
CAMDEN, CRAWFORD, DENT, LACLEDE, MARIES, MILLER, PHELPS, PULASKI AND TEXAS COUNTIES		
PAINTERS:		
Brush and Roller, Spray	18.04	7.87
Structural Steel, Sandblasting and all Tank Work	19.29	7.87
Lead Abatement	20.29	7.87

PAIN1292B 07/01/2001

	Rates	Fringes
BOLLINGER, BUTLER, CAPE GIRARDEAU, CARTER, DUNKLIN, MISSISSIPPI, NEW MADRID, OREGON, PEMISCOT, PERRY, REYNOLDS, RIPLEY, SCOTT, SHANNON, STODDARD and WAYNE COUNTIES		
PAINTERS:		
Commercial	15.44	5.97
Industrial	17.94	5.97
Bridges, Stacks & Tanks	22.89	5.97
Taper (Tools)	15.69	5.97
Spray & Abrasive Blasting	17.44	5.97
Waterblasting	17.44	5.97

Height Rates (All Areas): Over 60 ft. $0.50 per hour.
Under 60 ft. $0.25 per hour.

PAIN1292F 07/01/2001

	Rates	Fringes
IRON, MADISON, ST. FRANCOIS, STE. GENEVIEVE and WASHINGTON COUNTIES		
PAINTERS:		
Commercial	17.54	5.97
Industrial	18.54	5.97
Tapers (Tools)	17.79	5.97

Bridges, Stacks & Tanks	22.89	5.97
Spray & Abrasive Blasting	19.54	5.97
Waterblasting	19.54	5.97
Lead Abatement	18.29	5.97

Height Rates (All Areas): Over 60 ft. $0.50 per hour
Under 60 ft. $0.25 per hour.

PLAS0518F 04/01/2002

	Rates	Fringes
BARRY, BARTON, CEDAR, CHRISTIAN, DADE, DALLAS, DOUGLAS, GREENE, HOWELL, JASPER, LACLEDE, LAWRENCE, MCDONALD, NEWTON, OZARK, POLK, STONE, TANEY, VERNON, WEBSTER, AND WRIGHT COUNTIES		
CEMENT MASONS	17.31	3.84

PLAS0518G 04/01/2001

	Rates	Fringes
CASS (Richards-Gebaur AFB only), CLAY, JACKSON, PLATTE AND RAY COUNTIES		
CEMENT MASONS	21.25	8.15

PLAS0518K 05/01/2001

	Rates	Fringes
ANDREW, ATCHISON, BUCHANAN, BATES, CALDWELL, CARROLL, CASS (Except Richards-Gebaur AFB) CLINTON, DAVIESS, DEKALB, GENTRY, GRUNDY, HARRISON, HOLT, JACKSON, LAFAYETTE, LIVINGSTON, MACON, MERCER, NODAWAY AND WORTH COUNTIES		
CEMENT MASONS	23.13	7.15

PLAS0527A 05/01/2002

	Rates	Fringes
JEFFERSON, ST. CHARLES COUNTIES AND ST. LOUIS (City and County)		
CEMENT MASONS	25.48	8.94
FRANKLIN, LINCOLN, AND WARREN COUNTIES		
CEMENT MASONS	24.31	8.94

PLAS0527D 05/01/2002

	Rates	Fringes
CRAWFORD, DENT, IRON, MADISON, MARION, PHELPS, PIKE, PULASKI, RALLS, REYNOLDS, ST. FRANCOIS, STE. GENEVIEVE, SHANNON, TEXAS, WASHINGTON COUNTIES		
CEMENT MASONS	23.00	8.86

PLAS0908A 05/01/2002

	Rates	Fringes
BOLLINGER, BUTLER, CAPE GIRARDEAU, CARTER, DUNKLIN, MISSISSIPPI, NEW MADRID, OREGON, PEMISCOT, PERRY, RIPLEY, SCOTT, STODDARD, AND WAYNE COUNTIES		
CEMENT MASONS	17.40	8.95

PLAS0908G 03/01/2002

	Rates	Fringes
BENTON, CALLAWAY, CAMDEN, COLE, GASCONADE, HENRY, HICKORY, JOHNSON, MARIES, MILLER, MONTGOMERY, MORGAN, OSAGE, PETTIS, SALINE & ST. CLAIR COUNTIES		
CEMENT MASONS	17.81	7.65

PLUM0008C 06/01/2000

	Rates	Fringes
CASS, CLAY, JACKSON, JOHNSON, PLATTE COUNTIES		
PLUMBERS	26.44	9.87
BATES, BENTON, CARROLL, HENRY, LAFAYETTE, MORGAN, PETTIS, RAY, ST. CLAIR, SALINE, AND VERNON COUNTIES		
PLUMBERS	24.00	9.87

PLUM0035C 01/01/2000

	Rates	Fringes
CAMDEN, COLE, CRAWFORD, FRANKLIN, JEFFERSON, MARIES, MILLER, MONITEAU, OSAGE, PHELPS, PULASKI, ST. CHARLES, ST. LOUIS (City and County), WARREN and WASHINGTON COUNTIES		
PLUMBERS	26.105	9.74

PLUM0045D 09/01/2002

	Rates	Fringes
ANDREW, ATCHISON, BUCHANAN, CALDWELL, CLINTON, DAVIESS, DEKALB, GENTRY, HARRISON, HOLT, NODAWAY AND WORTH COUNTIES		
PLUMBERS & PIPEFITTERS	27.70	10.55

PLUM0178D 11/01/2001

	Rates	Fringes
BARRY, CEDAR, CHRISTIAN, DADE, DALLAS, DOUGLAS, GREENE, HICKORY, LACLEDE, LAWRENCE, POLK, STONE, TANEY, WEBSTER, AND WRIGHT COUNTIES		
PLUMBERS & PIPEFITTERS	22.10	7.37

PLUM0317B 07/01/1995

	Rates	Fringes
BOONE, CALLAWAY, COOPER, HOWARD, AND RANDOLPH COUNTY (Southern half)		
PLUMBERS & PIPEFITTERS	19.18	3.17

---

* PLUM0533E 06/01/2002

	Rates	Fringes
BATES, BENTON, CARROLL, CASS, CLAY, HENRY, HICKORY, JACKSON, JOHNSON, LAFAYETTE, MORGAN, PETTIS, PLATTE, RAY, SALINE, ST. CLAIR AND VERNON COUNTIES		
PIPEFITTERS	29.78	11.68

PLUM0562D 07/01/2002

	Rates	Fringes
ADAIR, AUDRAIN, BOLLINGER, BOONE, BUTLER, CALLAWAY,CAMDEN, CAPE GIRARDEAU,CARTER, CHARITON, CLARK, COLE, COOPER, CRAWFORD, DENT, DUNKLIN, FRANKLIN, GASCONADE, GRUNDY, HOWARD, HOWELL, IRON, JEFFERSON, KNOX, LEWIS, LINCOLN, LINN, LIVINGSTON, MACON, MADISON, MARIES, MARION, MERCER, MILLER, MISSISSIPPI, MONITEAU, MONROE, MONTGOMERY, NEW MADRID, OREGON, OSAGE, PEMISCOTT, PERRY, PHELPS, PIKE, PULASKI, PUTNAM, RALLS, RANDOLPH, REYNOLDS, RIPLEY, ST. CHARLES, ST.FRANCOIS, STE. GENEVIEVE, ST. LOUIS, SCHUYLER, SCOTLAND, SCOTT, SHANNON, SHELBY, STODDARD, SULLIVAN, TEXAS, WARREN, WASHINGTON,AND WAYNE COUNTIES.		
PIPEFITTERS	28.75	12.08

PLUM0658B 07/01/1998

	Rates	Fringes
BARTON, JASPER, MCDONALD, AND NEWTON COUNTIES		
PLUMBERS & PIPEFITTERS	16.73	5.33

TEAM0013H 05/01/2002

	Rates	Fringes
AUDRAIN, BOLLINGER, BOONE, CALLAWAY, CAPE GIRARDEAU, CARTER, COLE, CRAWFORD, DENT, GASCONADE, IRON, MACON, MADISON, MARIES, MARION, MILLER, MISSISSIPPI, MONROE, MONTGOMERY, NEW MADRID, OSAGE, PEMISCOT, PERRY, PHELPS, PIKE, PULASKI, RALLS, REYNOLDS, ST. FRANCOIS, STE. GENEVIEVE, SCOTT, SHANNON, SHELBY, STODDARD, TEXAS, WASHINGTON, AND WAYNE COUNTIES		
TRUCK DRIVERS:		
GROUP 1	22.52	5.50
GROUP 2	22.68	5.50
GROUP 3	22.67	5.50
GROUP 4	22.79	5.50

ADAIR, BUTLER, CLARK, DUNKIN, HOWELL, KNOX, LEWIS, OREGON, PUTNAM, RIPLEY, SCHUYLER, AND SCOTLAND COUNTIES

TRUCK DRIVERS:		
GROUP 1	21.79	5.50
GROUP 2	21.95	5.50
GROUP 3	21.94	5.50
GROUP 4	22.06	5.50

TRUCK DRIVERS CLASSIFICATIONS:

GROUP 1: Flat Bed Trucks, Single Axle; Station Wagons; Pickup Trucks; Material Trucks, Single Axle; Tank Wagon, Single Axle
GROUP 2: Agitator and Transit Mix Trucks
GROUP 3: Flat Bed Trucks, Tandem Axle; Articulated Dump Trucks; Material Trucks, Tandem Axle; Tank Wagon, Tandem Axle
GROUP 4: Semi and/or Pole Trailers; Winch, Fork & Steel Trucks; Distributor Drivers and Operators; Tank Wagon, Semi-Trailer; Insley Wagons, Dumpsters, Half-Tracks, Speedace, Euclids and other similar equipment; A-Frame and Derrick Trucks; Float or Low Boy

---

TEAM0056A 05/01/2002

	Rates	Fringes
BUCHANAN, JOHNSON AND LAFAYETTE COUNTIES		
TRUCK DRIVERS:		
GROUP 1	23.43	5.50
GROUP 2	23.54	5.50
GROUP 3	23.58	5.50
GROUP 4	23.65	5.50
GROUP 5	23.33	5.50
ANDREW, BARTON, BATES, BENTON, CALDWELL, CAMDEN, CARROLL, CEDAR, CHARITON, CHRISTIAN, CLINTON, COOPER, DADE, DALLAS, DAVIESS, DEKALB, DOUGLAS, GREENE, HENRY, HICKORY, HOWARD, JASPER, LACLEDE, LAWRENCE, LINN, LIVINGSTON, MONITEAU, MORGAN, NEWTON, PETTIS, POLK, RANDOLPH, ST CLAIR, SALINE, VERNON, WEBSTER, AND WRIGHT COUNTIES		
TRUCK DRIVERS:		
GROUP 1	22.22	5.50
GROUP 2	22.38	5.50
GROUP 3	22.37	5.50
GROUP 4	22.49	5.50
GROUP 5	22.12	5.50
ATCHISON, BARRY, GENTRY, GRUNDY, HARRISON, HOLT, MCDONALD, MERCER, NODADWAY, OZARK, STONE, SULLIVAN, TANEY AND WORTH COUNTIES		
TRUCK DRIVERS:		
GROUP 1	21.49	5.50

GROUP 2	21.65	5.50
GROUP 3	21.64	5.50
GROUP 4	21.76	5.50
GROUP 5	21.39	5.50

TRUCK DRIVER CLASSIFICATIONS

GROUP 1: Flat bed trucks single axle; station wagons; pickup trucks; material trucks single axle; tank wagons single axle.

GROUP 2: Agitator and transit mix-trucks.

GROUP 3: Flat bed trucks tandem axle; articulated dump trucks; material trucks tandem axle; tank wagons tandem axle.

GROUP 4: Semi and/or pole trailers; winch, fork & steel trucks; distributor drivers & operators; tank wagons semi-trailer; insley wagons, dumpsters, half-tracks, speedace, euclids & other similar equipment; A-frames and derrick trucks; float or low boy.

GROUP 5: Warehousemen.

TEAM0245C 03/25/1998

	Rates	Fringes

BARRY, BARTON, CAMDEN, CEDAR, CHRISTIAN, DALLAS, DENT, DOUGLAS, GREENE, HICKORY, HOWELL, JASPER, LACLEDE, LAWRENCE, MCDONALD, MILLER, NEWTON, OZARK, PHELPS, POLK, PULASKI, SHANNON, STONE, TANEY, TEXAS, VERNON, WEBSTER AND WRIGHT COUNTIES

TRUCK DRIVERS:

Traffic Control Service Driver	12.90	3.56+a

PAID HOLIDAYS: New Year's Day, Decoration Day, July 4th, Labor Day, Thanksgiving Day, Christmas Day, Employee's birthday and 2 personal days.

TEAM0541A 04/01/2002

	Rates	Fringes

CASS, CLAY, JACKSON, PLATTE AND RAY COUNTIES

TRUCK DRIVERS:

GROUP 1	22.89	6.75
GROUP 2	22.38	6.75
GROUP 3	21.89	6.75

TRUCK DRIVERS CLASSIFICATIONS

GROUP 1: Mechanics and Welders, Field; A-Frame Low Boy-Boom Truck Driver.
GROUP 2: Articulated Dump Truck; Insley Wagons: Dump Trucks, Excavating, 5 cu yds and over; Dumpsters; Half-Tracks: Speedace: Euclids & similar excavating equipment.

Material trucks, Tandem Two teams; Semi-Trailers;
Winch trucks-Fork trucks; Distributor Drivers
and Operators; Agitator and Transit Mix; Tank Wagon
Drivers, Tandem or Semi; One Team; Station Wagons;
Pickup Trucks; Material Trucks, Single Axle; Tank
Wagon Drivers, Single Axle
GROUP 3: Oilers and Greasers - Field

TEAM0541C 03/25/2000

	Rates	Fringes
BATES, CASS, CLAY, HENRY, JACKSON, JOHNSON, LAFAYETTE, PLATTE, AND RAY COUNTIES		
TRUCK DRIVERS:		
Traffic Control Service Driver	14.15	2.44+a

a. PAID HOLIDAYS: New Year's Day, Decoration Day, July 4th,
Labor Day, Thanksgiving Day, Christmas Day,
Employee's birthday and 2 personal days.

TEAM0682D 05/01/2002

	Rates	Fringes
ST LOUIS CITY AND COUNTY		
TRUCK DRIVERS:		
GROUP 1	22.435	3.46+a+b
GROUP 2	22.635	3.46+a+b
GROUP 3	22.735	3.46+a+b
GROUP 4	21.925	3.46+a+b

a. PENSION: $22.80 per day, $114.00 maximum per week.

b. HAZMAT PREMIUM: If Hazmat certification on a job site is

required by a state or federal agency or requested by project
owner or by the employer, employees on that job site shall
receive $1.50 premium pay.

TRUCK DRIVERS CLASSIFICATIONS

GROUP 1 - Pick-up trucks; forklift, single axle; flatbed trucks;
job site ambulance, and trucks or trailers of a water level
capacity of 11.99 cu. yds. or less

GROUP 2 - Trucks or trailers of a water level capacity of 12.0 cu
yds. up to 22.0 cu yds. including euclids, speedace and similar
equipment of same capacity and compressors

GROUP 3 - Trucks or trailers of a water level capacity of 22.0
cu. yds & over including euclids, speedace & all floats, flatbed
trailers, boom trucks, winch trucks, including small trailers,
farm wagons tilt-top trailers, field offices, tool trailers,
concrete pumps, concrete conveyors & gasoline tank trailers and
truck mounted mobile concrete mixers

GROUP 4 - Warehousemen.

FOOTNOTE FOR TRUCK DRIVERS:

a. PAID HOLIDAYS: Christmas Day, Independence Day, Labor Day, Memorial Day, Veterans Day, New Years Day, Thanksgiving Day

PAID VACATION: 3 days paid vacation for 600 hours of service in any one contract year; 4 days paid vacation for 800 hours of service in any one contract year; 5 days paid vacation for 1,000 hours of service in any one contract year.

When such an employee has completed 3 years of continuous employment with the same employer and then works the above required number of hours, he shall receive double the number of days of vacation specified above.

When such an employee has completed 10 years of continuous employment with the same employer and then works the above required number of hours, he shall receive triple the number of days of vacation specified above.

When such an employee has completed 15 years of continuous employment with the same employer and then works the above required number of hours, he shall receive 4 times the number of days of vacation specified above.

TEAM0682E 05/01/2002

	Rates	Fringes
ST.CHARLES, FRANKLIN, JEFFERSON, LINCOLN AND WARREN COUNTIES:		
TRUCK DRIVERS:		
GROUP 1	22.435	3.46+a+b+c
GROUP 2	22.635	3.46+a+b+c
GROUP 3	22.735	3.46+a+b+c
GROUP 4	21.925	3.46+a+b+c

a.PAID HOLIDAYS: Christmas, Fourth of July, Labor Day, Memorial Day, Veterans Day, to be celebrated on either its National Holiday or on the day after Thanksgiving, whichever is agreed upon by the Association and the Union, New Year's Day and Thanksgiving Day.

PAID VACATION: 3 days paid vacation for 600 hours of service in any one contract year; 4 days paid vacation for 800 hours of service in any one contract year; 5 days paid vacation for 1,000 hours of service in any one contract year.

When such an employee has completed 3 years of continuous employment with the same employer and then works the above required number of hours, he shall receive double the number of days of vacation specified above.

When such an employee has completed 10 years of continuous employment with the same employer and then works the above required number of hours, he shall receive triple the number of days of vacation specified above.

When such an employee has completed 15 years of continuous employmen with the same employer and then works the above required number of hours, he shall receive 4 times the number of days of vacation specified above.

b.Pension: $22.80 per day either worked or compensated to a maximum of $114.00 per week.

c.Hazmat Pay: If Hazmat Certification on a job site is required by a state or federal agency or requested by project owner or by the employer, employees on that job site shall receive $1.50 per hour premium pay.

TRUCK DRIVER CLASSIFICATIONS:

GROUP 1: Trucks or Trailers of a Water Level Capacity of 11.99 cu. yds. or less, Forklift Trucks, Job Site Ambulances, Pickup Trucks, Flatbed Trucks.

GROUP 2: Trucks or Trailers of a Water Level Capacity of 12.0 cu. yds. up to 22 cu. yds., Euclids, Speedace and Similar Equipment of Same Capacity and Compressors.

GROUP 3: Trucks or Trailers of a Water Level Capacity of 22.0 cu. yds. and over, Euclids and all Floats, Flatbed Trailers, Boom Trucks, Winch Trucks, Including Small

Trailers, Farm Wagons, Tilt Top Trailers, Tool Trailers, Concrete Pumps, Concrete Conveyors, Gasoline Tank Trailers, Truck Mounted Mobile Concrete Mixers, End Dump, Side Dump and Articulated Dump Trucks.

GROUP 4: Warehousemen.

WELDERS - Receive rate prescribed for craft performing operation to which welding is incidental.

==========

Unlisted classifications needed for work not included within the scope of the classifications listed may be added after award only as provided in the labor standards contract clauses (29 CFR 5.5(a)(1)(ii)).

In the listing above, the "SU" designation means that rates listed under that identifier do not reflect collectively bargained wage and fringe benefit rates. Other designations indicate unions whose rates have been determined to be prevailing.

WAGE DETERMINATION APPEALS PROCESS

1.) Has there been an initial decision in the matter? This can be:

* an existing published wage determination
* a survey underlying a wage determination
* a Wage and Hour Division letter setting forth a position on a wage determination matter
* a conformance (additional classification and rate) ruling

On survey related matters, initial contact, including requests for summaries of surveys, should be with the Wage and Hour Regional Office for the area in which the survey was conducted because those Regional Offices have responsibility for the Davis-Bacon survey program. If the response from this initial contact is not satisfactory, then the process described in 2.) and 3.) should be followed.

With regard to any other matter not yet ripe for the formal process described here, initial contact should be with the Branch of Construction Wage Determinations. Write to:

Branch of Construction Wage Determinations
Wage and Hour Division
U. S. Department of Labor
200 Constitution Avenue, N. W.
Washington, D. C. 20210

2.) If the answer to the question in 1.) is yes, then an interested party (those affected by the action) can request review and reconsideration from the Wage and Hour Administrator (See 29 CFR Part 1.8 and 29 CFR Part 7). Write to:

Wage and Hour Administrator
U.S. Department of Labor
200 Constitution Avenue, N. W.
Washington, D. C. 20210

The request should be accompanied by a full statement of the interested party's position and by any information (wage payment data, project description, area practice material, etc.) that the requestor considers relevant to the issue.

3.) If the decision of the Administrator is not favorable, an interested party may appeal directly to the Administrative Review Board (formerly the Wage Appeals Board). Write to:

Administrative Review Board
U. S. Department of Labor
200 Constitution Avenue, N. W.
Washington, D. C. 20210

4.) All decisions by the Administrative Review Board are final.

END OF GENERAL DECISION

DIVISION 1 - GENERAL REQUIREMENTS

Section No.	Title
01090	Sources for Referenced Publications
01100	General
01270A	Measurement and Payment
01312	Resident Management System
01320a	Project Schedule
01330	Submittal Procedures
01354	Environmental protection For Civil Works
01356A	Storm Water Pollution Prevention Measures
01451	Contractor Quality Control
01500	Temporary Construction Facilities
01550	Hydrology
01780	Closeout Submittals

SECTION 01090

SOURCES FOR REFERENCE PUBLICATIONS
06/00

PART 1 GENERAL

1.1 REFERENCES

Various publications are referenced in other sections of the specifications to establish requirements for the work. These references are identified in each section by document number, date and title. The document number used in the citation is the number assigned by the sponsoring organization, e.g. ASTM B 564 Nickel Alloy Forgings. However, when the sponsoring organization has not assigned a number to a document, an identifying number has been assigned for reference purposes.

1.2 ORDERING INFORMATION

The addresses of the organizations whose publications are referenced in other sections of these specifications are listed below, and if the source of the publications is different from the address of the sponsoring organization, that information is also provided. Documents listed in the specifications with numbers which were not assigned by the sponsoring organization should be ordered from the source by title rather than by number.

ACI INTERNATIONAL (ACI)

P.O. Box 9094
Farmington Hills, MI 48333-9094
Ph: 248-848-3700
Fax: 248-848-3701
Internet: http://www.aci-int.org
AOK 6/00

ACOUSTICAL SOCIETY OF AMERICA (ASA)

2 Huntington Quadrangle
Melvile, NY 11747-4502
Ph: 516-576-2360
Fax: 516-576-2377
email: asa@aip.org
Internet: http://asa@aip.org
AOK 6/00

AGRICULTURAL MARKETING SERVICE (AMS)

Seed Regulatory and Testing Branch
USDA, AMS, LS Div.
Room 209, Bldg. 306, BARC-East
Beltsville, MD 20705-2325

Ph: 301-504-9430
Fax: 301-504-8098
Internet: http://www.ams.usda.gov/lsg
e-mail: james_p_triplitt@usda.gov
AOK 6/00

AIR CONDITIONING AND REFRIGERATION INSTITUTE (ARI)

4301 North Fairfax Dr., Suite 425
ATTN: Pubs Dept.
Arlington, VA 22203
Ph: 703-524-8800
Fax: 703-528-3816
E-mail: ari@ari.org
Internet: www.ari.org
AOK 6/00

AIR CONDITIONING CONTRACTORS OF AMERICA (ACCA)

1712 New Hampshire Avenue, NW
Washington, DC 20009
Ph: 202-483-9370
FAX: 202-588-1217
Intrnet: www.acca.org
AOK 6/00

AIR DIFFUSION COUNCIL (ADC)

104 So. Michigan Ave., No. 1500
Chicago, IL 60603
Ph: 312-201-0101
Fax: 312-201-0214
Internet: www.flexibleduct.org
AOK 6/00

AIR MOVEMENT AND CONTROL ASSOCIATION (AMCA)

30 W. University Dr.
Arlington Heights, IL 60004-1893
Ph: 847-394-0150
Fax: 847-253-0088
Internet: www.amca.org
AOK 6/00

ALUMINUM ASSOCIATION (AA)

900 19th Street N.W.
Washington, DC 20006
Ph: 202-862-5100
Fax: 202-862-5164
Internet: www.aluminum.org
AOK 6/00

AMERICAN ARCHITECTURAL MANUFACTURERS ASSOCIATION (AAMA)

1827 Walden Ofc. Sq.
Suite 104
Schaumburg, IL 60173-4268
Ph: 847-303-5664
Fax: 847-303-5774
Internet: www.aamanet.org
AOK 6/00

AMERICAN ASSOCIATION OF STATE HIGHWAY AND TRANSPORTATION OFFICIALS (AASHTO)

444 N. Capital St., NW, Suite 249
Washington, DC 20001
Ph: 800-231-3475 202-624-5800
Fax: 800-525-5562 202-624-5806
Internet: www.aashto.org
AOK 6/00

NOTE: AASHTO documents with numbers beginning with M or T are available only in Standard Specifications for Transportation Materials and Methods of Sampling and Testing, 1998 @$289.00\X

AMERICAN ASSOCIATION OF TEXTILE CHEMISTS AND COLORISTS (AATCC)

P.O. Box 12215
1 Davis Drive
Research Triangle Park, NC 27709-2215
Ph: 919-549-8141
Fax: 919-549-8933
Internet: aatcc.org
AOK 6/00

AMERICAN BEARING MANUFACTURERS ASSOCIATION (AFBMA)

1200 19th Street, NW, Suite 300
Washington, DC 20036-2422
Ph: 202-429-5155
Fax: 202-828-6042
Internet: abma-dc.org
AOK 6/00

AMERICAN BOILER MANUFACTURERS ASSOCIATION (ABMA)

950 North Glebe Road, Suite 160
Arlington, Virginia 22203-1824
Ph:703-522-7350
Fax: 703-522-2665
Internet: abma.com
AOK 6/00

AMERICAN CONCRETE PIPE ASSOCIATION (ACPA)

222 West Las Colinas Blvd., Suite 641
Irving, TX 75039-5423
Ph: 972-506-7216
Fax: 972-506-7682
Internet: http://www.concrete-pipe.org
e-mail: info@concrete-pipe.org
AOK 6/00

AMERICAN CONFERENCE OF GOVERNMENTAL INDUSTRIAL HYGIENISTS (ACGIH)

1330 Kemper Meadow Dr.
Suite 600
Cincinnati, OH 45240
Ph: 513-742-2020
Fax: 513-742-3355
Internet: www.acgih.org
E-mail: pubs@acgih.org
AOK 6/00

AMERICAN FOREST & PAPER ASSOCIATION (AF&PA)

American Wood Council
ATTN: Publications Dept.
1111 Nineteenth St. NW, Suite 800
Washington, DC 20036
Ph: 800-294-2372 202-463-2700
Fax: 202-463-2471
Internet: http://www.afandpa.org
AOK 6/00

AMERICAN GAS ASSOCIATION (AGA)

400 N. Capitol St. N.W.Suite 450
Washington, D.C. 20001
Ph: 202-824-7000
Fax: 202-824-7115
Internet: www.aga.org
AOK 6/00

AMERICAN GAL ASSOCIATION LABORATORIES (AGAL)

Address
Ph:
Fax:
Internet:

AMERICAN GEAR MANUFACTURERS ASSOCIATION (AGMA)

1500 King St., Suite 201
Alexandria, VA 22314-2730
Ph: 703-684-0211
Fax: 703-684-0242
Internet: www.agma.org
AOK 6/00

AMERICAN INSTITUTE OF STEEL CONSTRUCTION (AISC)

One East Wacker Dr., Suite 3100
Chicago, IL 60601-2001
Ph: 312-670-2400
Publications: 800-644-2400
Fax: 312-670-5403
Internet: www.aisc.org
AOK 6/00

AMERICAN INSTITUTE OF TIMBER CONSTRUCTION (AITC)

7012 So. Revere Parkway, Suite 140
Englewood, CO 80112
Ph: 303-792-9559
Fax: 303-792-0669
Internet: www.aitc-glulam.org
AOK 6/00

AMERICAN IRON AND STEEL INSTITUTE (AISI)

1101 17th St., NW Suite 1300
Washington, DC 20036
Ph: 202-452-7100

AOK 6/00

AMERICAN NATIONAL STANDARDS INSTITUTE (ANSI)

11 West 42nd St
New York, NY 10036
Ph: 212-642-4900
Fax: 212-398-0023
Internet: www.ansi.org/
Note: Documents beginning with the letter "S" can be ordered from:
Acoustical Society of America
P. O. Box 1020
Sweickley, PA 15143-9998
Ph: 412-741-1979
Fax: 412-741-0609
Internet: asa.aip.org
AOK 6/00

AMERICAN NURSERY AND LANDSCAPE ASSOCIATION (ANLA)

1250 I St., NW, Suite 500
Washington, DC 20005-3922
Ph: 202-789-2900
FAX: 202-789-1893
AOK 6/00

AMERICAN PETROLEUM INSTITUTE (API)

1220 L St., NW
Washington, DC 20005-4070
Ph: 202-682-8000
Fax: 202-962-4776
Internet: http://www.api.org
AOK 6/00

AMERICAN RAILWAY ENGINEERING & MAINTENANCE-OF-WAY ASSOCIATION (AREMA)

8201 Corporate Dr., Suite 1125
Landover, MD 20785-2230
Ph: 301-459-3200
Fax: 301-459-8077
Internet: www.arema.org
AOK 6/00

AMERICAN SOCIETY FOR NONDESTRUCTIVE TESTING (ASNT)

1711 Arlingate Lane
P.O. Box 28518
Columbus, OH 43228-0518
Ph: 800-222-2768
Fax: 614-274-6899
Internet: www.asnt.org
AOK 6/00

AMERICAN SOCIETY FOR QUALITY (ASQ)

611 East Wisconscin Ave.
P.O. Box 3005
Milwaukee, WI 53201-3005
Ph: 800-248-1946
Fax: 414-272-1734
Internet: http://www.asq.org
AOK 6/00

AMERICAN SOCIETY FOR TESTING AND MATERIALS (ASTM)

100 Barr Harbor Drive
West Conshohocken, PA 19428-2959
Ph: 610-832-9585
Fax: 610-832-9555
Internet: www.astm.org
AOK 6/00

NOTE: The annual ASTM Book of Standards (66 Vol) is available for $3500.00. Prices of individual standards vary.

AMERICAN SOCIETY OF CIVIL ENGINEERS (ASCE)

1801 Alexander Bell Drive
Reston, VA 20190-4400
Ph: 703-295-6300 - 800-548-2723
Fax: 703-295-6222
Internet: www.asce.org
e-mail: marketing@asce.org
AOK 6/00

AMERICAN SOCIETY OF HEATING, REFRIGERATING AND AIR-CONDITIONING ENGINEERS (ASHRAE)

1791 Tullie Cir., NE
Atlanta, GA 30329
Ph: 800-527-4723 or 404-636-8400
Fax: 404-321-5478
Internet: http://www.ashrae.org
AOK 6/00

AMERICAN SOCIETY OF SANITARY ENGINEERING FOR PLUMBING AND SANITARY RESEARCH (ASSE)

901 Canterbury, Suite A
Westlake, OH 44145
Ph: 440-835-3040
Fax: 440-835-3488
E-mail: asse@ix.netcom.com
Internet: www.asse-plumbing.org
AOK 6/00

AMERICAN WATER WORKS ASSOCIATION(AWWA)

6666 West Quincy
Denver, CO 80235
Ph: 800-926-7337 - 303-794-7711
Fax: 303-347-0804
Internet: www.awwa.org
AOK 6/00

AMERICAN WELDING SOCIETY (AWS)

550 N.W. LeJeune Road
Miami, FL 33126
Ph: 800-443-9353 - 305-443-9353
Fax: 305-443-7559
Internet: http://www.amweld.org
AOK 6/00

AMERICAN WOOD-PRESERVERS' ASSOCIATION (AWPA)

3246 Fall Creek Highway, Suite 1900
Grandbury, TX 76049-7979
Ph: 817-326-6300
Fax: 817-326-6306

NOTE: AWPA Book of Standards is published yearly @$75.00; individual standards may be ordered separately for $12.00 to $28.00 each.

APA - THE ENGINEERED WOOD ASSOCIATION (APA)

2130 Barrett Park Dr., Suite 102
Kennesaw, GA 30144-3681
Ph: 770-427-9371
Fax: 770-423-1703
Internet: www.apawood.org
Note: Prices are available only by calling APA

ARCHITECTURAL WOODWORK INSTITUTE (AWI)

1952 Isaac Newton Square West
Reston, VA 20190
Ph: 703-733-0600
Fax: 703-733-0584
Internet: www.awinet.org

ARMY ENVIRONMENTAL CENTER (AEC)

(Add Address, Telephone)

ARMY PAMPHLET (DAPAM)

(Add Address, Telephone)

ASBESTOS CEMENT PIPE PRODUCERS ASSOCIATION (ACPPA)

1745 Jefferson Davis Highway, Suite 406
Arlington, VA 22202
Ph: 703-412-1153
Fax: 703-412-1152

ASME INTERNATIONAL (ASME)

Three Park Avenue
New York, NY 10016-5990
Ph: 212-591-7722
Fax: 212-591-7674
Internet: www.asme.org

ASPHALT INSTITUTE (AI)

Research Park Dr.
P.O. Box 14052
Lexington, KY 40512-4052

Ph: 606-288-4960
Fax: 606-288-4999
Internet: www.asphaltinstitute.org
e-mail: asphalti@asphaltinstitute.org

ASSOCIATED AIR BALANCE COUNCIL (AABC)

1518 K St., NW, Suite 503
Washington, DC 20005
Ph: 202-737-0202
Fax: 202-638-4833

ASSOCIATION FOR THE ADVANCEMENT OF MEDICAL INSTRUMENTATION (AAMI)

3330 Washington Blvd., Suite 400
Arlington, VA 22201-4598
Ph: 703-525-4890
Fax: 703-276-0793
Internet: www.aami.org

ASSOCIATION OF EDISON ILLUMINATING COMPANIES (AEIC)

600 No. 18th St.
P.O. Box 2641
Birmingham, AL 35291-0992
Ph: 205-257-2530
Fax: 205-257-2540
Internet: http://www.aeic.org/index.htm
E-Mail: veazey-white@apc.com

ASSOCIATION OF HOME APPLIANCE MANUFACTURERS (AHAM)

20 No. Wacker Dr., Suite 1231
Chicago, IL 60606
Ph: 312-984-5800
Fax: 312-984-5823
Internet: http://www.aham.org

ASSOCIATION OF IRON AND STEEL ENGINEERS (AISE)

Three Gateway Center, Suite 1900
Pittsburg, PA 15222-1004
Ph: 412-281-6323

BIFMA INTERNATIONAL (BIFMA)

2680 Horizon Drive SE, Suite A-1
Grand Rapids, MI 49546-7500
Ph: 616-285-3963
Fax: 616-285-3765
Internet: www.bifma.com
E-mail: email@bifma.com

BIOCYCLE, JOURNAL OF WASTE RECYCLING

BRICK INSTITUTE OF AMERICA (BIA)

11490 Commerce Park Dr., Suite 308
Reston, VA 22091
Ph: 703-620-0010
Fax: 703-620-3928

BUILDERS HARDWARE MANUFACTURERS ASSOCIATION (BHMA)

355 Lexington Ave. New York, NY 10017-6603
Ph: 212-297-2100
Fax: 212-370-9047
Internet: www.buildershardware.com

BUILDING OFFICIALS & CODE ADMINISTRATORS INTERNATIONAL (BOCA)

4051 W. Flossmoor Rd.
Country Club Hills, IL 60478
Ph: 708-799-2300
Fax: 708-799-4981
E-mail: boca@aecnet.com

BUREAU OF RECLAMATION (BOR)

Dept. of the Interior
P.O. Box 25007
Denver, CO 80225
Ph: 303-236-0305, ext. 457
Order from:
National Technical Information
Services (NTIS)
5285 Port Royal Rd.
Springfield, VA 22161
Ph: 703-605-6000
Fax: 703-605-6900
Internet: http://www.fedworld.gov/ntis/ntishome.html

CALIFORNIA DEPARTMENT OF TRANSPORTATION (CDT)

Publication Distribution Unit
1900 Royal Oaks Dr.
Sacramento, CA 95815
Ph: 916-445-3520 or 916-227-7000 (CA Transportation Lab)
Fax: 916-324-8997

CALIFORNIA REDWOOD ASSOCIATION (CRA)

405 Enfrente Ave., Suite 200
Novato, CA 94949
Ph: 415-382-0662
Fax: 415-382-8531

CARPET AND RUG INSTITUTE (CRI)

310 Holiday Ave.
P.O. Box 2048
Dalton, GA 30722-2048
Ph: 706-278-0232
Fax: 706-278-8835
Internet: carpet-rug.com

CAST IRON SOIL PIPE INSTITUTE (CISPI)

5959 Shallowford Rd., Suite 419
Chattanooga, TN 37421
Ph: 423-892-0137
Fax: 423-892-0817

CEILINGS & INTERIOR SYSTEMS CONSTRUCTION ASSOCIATION (CISCA)

1500 Lincoln Highway, Suite 202
St. Charles, IL 60174
Ph: 708-584-1919
Fax: 708-584-2003

CHLORINE INSTITUTE (CI)

2001 L St., NW
Washington, DC 20036
Ph: 202-775-2790
Fax: 202-223-7225

CODE OF FEDERAL REGULATIONS (CFR)

Order from:
Government Printing Office
Washington, DC 20402
Ph: 202-512-1800
Fax: 202-275-7703
Internet: http://www.pls.com:8001/his/cfr.html

COMMERCIAL ITEM DESCRIPTIONS (CID)

Order from:
General Services Administration
Federal Supply Service Bureau
470 E L'Enfant Plaza, S.W., Suite 8100
Washington, DC 20407
Ph: 202-619-8925
Internet: http://pub.fss.gsa.gov/h1-pub.html

COMPRESSED GAS ASSOCIATION (CGA)

1725 Jefferson Davis Highway, Suite 1004
Arlington, VA 22202-4102
Ph: 703-412-0900

Fax: 703-412-0128
Internet: www.cganet.com
e-mail: Customer_Service@cganet.com

CONCRETE REINFORCING STEEL INSTITUTE (CRSI)

933 No. Plum Grove Rd.
Schaumburg, IL 60173-4758
Ph: 847-517-1200
Fax: 847-517-1206
Internet: http://www.crsi.org

CONSUMER PRODUCT SAFETY COMMISSION (CPSC)

Washington, DC 20207
Ph: 301-504-0580

CONVEYOR EQUIPMENT MANUFACTURERS ASSOCIATION (CEMA)

9384-D Forestwood Lane
Manassas, VA 22110
Ph: 703-330-7079
Fax: 703-330-7984

COOLING TOWER INSTITUTE (CTI)

530 Wells Fargo Dr., Suite 218, Houston, TX 77090
Ph: 281-583-4087
Fax: 281-537-1721

COPPER DEVELOPMENT ASSOCIATION (CDA)

260 Madison Ave.
New York, NY 10016
Ph: 212-251-7200
Fax: 212-251-7234
E-mail: http://www.copper.org

CORPS OF ENGINEERS (COE)

Order from:
U.S. Army Engineer Waterways Experiment Station
ATTN: Technical Report Distribution Section, Services Branch, TIC
3909 Halls Ferry Rd.
Vicksburg, MS 39180-6199
Ph: 601-634-2571
Fax: 601-634-2506
NOTE: COE Handbook for Concrete and Cement (Documents w/prefix CRD-C) (1949-present; 2 Vol) free to Government offices; $10.00 plus $8.00 per yr for 4 qtrly supplements to others). Individual documents, single copies free. Order from address above.

COUNCIL OF AMERICAN BUILDING OFFICIALS (CABO)

5203 Leesburg Pike, Suite 708
Falls Church, VA 22041
Ph: 703-931-4533
Fax: 703-379-1546

DEPARTMENT OF AGRICULTURE (USDA)

14TH STREET & INDEPENDENCE AVE. S.W.
WASHINGTON, D.C. 20250
Ph: (202) 720-2791
Publications: 301-344-2340

DEPARTMENT OF COMMERCE (DOC)

Order From:
National Technical Information Service
5285 Port Royal Road
Springfield, VA 22161
Ph: 703-605-6000
Fax: 703-605-6900
Internet: http://www.ntis.gov

DEPARTMENT OF DEFENSE (DOD)

Order from:
National Technical Information Service
5285 Port Royal Road
Springfield, VA 22161
Ph: 703-487-4650
FAX: 703-321-8547

DEPARTMENT OF HOUSING AND URBAN DEVELOPMENT (HUD)

Order from:
HUD User
P.O. Box 6091
Rockville, MD 20850
Ph: 800-245-2691
e-mail: Huduser@aspensys.com

DEPARTMENT OF STATE (SD)

ATTN: DS/PSP/SEP
SA-6, Room 804
Washington, DC 20522-0602
Ph: 703-875-6537

DOOR AND ACCESS SYSTEM MANUFACTURERS ASSOCIATION (DASMA)

1300 Sumner Avenue
Cleveland, OH 44115-2851
Ph: 216-241-7333
Fax: 216-241-0105

Internet: www.taol.com/dasma
e-mail: dasma@taol.com

DOOR AND HARDWARE INSTITUTE (DHI)

14170 Newbrook Dr.
Chantilly, VA 20151-2232
Ph: 703-222-2010
Fax: 703-222-2410
Internet: www.dhi.org
E-mail: techdept@dhi.org

DUCTILE IRON PIPE RESEARCH ASSOCIATION (DIPRA)

245 Riverchase Parkway East, Suite 0
Birmingham, AL 35244
Ph: 205-402-8700
Fax: 205-402-8730
Internet: www.dipra.org
E-mail: info@dipra.org

EIFS INDUSTRY MEMBERS ASSOCIATION (EIMA)

402 No. 4th St., Suite 102
Yakima, WA 98901-2470
Ph:
Fax: 509-457-0169

ELECTRONIC INDUSTRIES ALLIANCE (EIA)

2500 Wilson Blvd.
Arlington, VA 22201-3834
Ph: 703-907-7500
Fax: 703-907-7501
Internet: www.eia.org

ENGINEERING MANUALS (EM)

USACE Publications Depot
Attn: CEIM-SP-D
2803 52nd Avenue
Hyattsville, MD 20781-1102
Ph: 301-394-0081

ENGINEERING PAMPHLETS (EP)

USACE Publications Depot
Attn: CEIM-SP-D
2803 52nd Avenue
Hyattsville, MD 20781-1102
Ph: 301-394-0081

ENGINEERING REGULATIONS (ER)

USACE Publications Depot
Attn: CEIM-SP-D 2803 52nd Avenue
Hyattsville, MD 20781-1102
Ph: 301-394-0081

ELECTRICAL GENERATING SYSTEMS ASSOCIATION (EGSA)

Ph: 561-750-5575
http://www.esga/std cat.htm

ENVIRONMENTAL PROTECTION AGENCY (EPA)

Public Information Center
401 M St., SW
Washington, DC 20460
Ph: 800-490-9198
FAX: 202-260-6257
Internet: http://www.epa.gov
NOTE: Some documents are available only from: National Technical Information Services (NTIS)
5285 Port Royal Rd.
Springfield, VA 22161
Ph: 800-553-6847
Fax: 703-321-8547
Internet: http://www.fedworld.gov/ntis/ntishome.html

EXPANSION JOINT MANUFACTURERS ASSOCIATION (EJMA)

25 No. Broadway
Tarrytown, NY 10591
Ph: 914-332-0040

FACTORY MUTUAL ENGINEERING AND RESEARCH (FM)

1151 Boston-Providence Turnpike
P.O. Box 9102
Norwood, MA 02062-9102
Ph: 617-255-4681
Fax: 617-255-4359
Internet: http://www.factorymutual.com

FEDERAL AVIATION ADMINISTRATION (FAA)

Order from:
Superintendant of Documents
U. S. Government Printing Office
Washington, DC 20402
Ph: 202-512-1800
Fax: 202-512-1356
For free documents, order from:
Federal Aviation Administration
Dept. of Transportation
ATTN: General Services Section M-45
400 Seventh St., SW

Washington, DC 20590-0001
Ph: 202-619-8925
Fax: 202-619-8978
Internet: www.faa.gov

FEDERAL HIGHWAY ADMINISTRATION (FHWA)

Office of Highway Safety (HHS-31)
400 Seventh St., SW
Washington, DC 20590-0001
Ph: 202-366-0411
Fax: 202-366-2249
Order from:
Government Printing Office
Superintendent of Documents
Washington, DC 20402
Ph: 202-783-3238

FEDERAL SPECIFICATIONS (FS)

Order from:
General Services Administration
Federal Supply Service Bureau
470 L'Enfant Plaza, S.W.
Washington, DC 20407
Ph: 202-619-8925
Fax: 202-619-8978
Internet: http://pub.fss.gsa.gov/

FEDERAL STANDARDS (FED-STD)

Order from:
General Services Administration
Federal Supply Service Bureau
470 E L'Enfant Plaza, S.W.
Washington, DC 20407
Ph: 202-619-8925
Fax: 202-619-8978
Internet: http://pub.fss.gsa.gov/

FORESTRY SUPPLIERS (FSUP)

205 West Rankin St.
Jackson, MS 39201
Ph: 800-647-5368
Fax: 800-543-4203
Internet: www.forestry-suppliers.com

FOUNDATION FOR CROSS-CONNECTION CONTROL AND HYDRAULIC RESEARCH (FCCCHR)

USC
KAP-200 University Park MC-2531
Los Angeles, CA 90089-2531

Ph: 213-740-2032
Fax: 213-740-8399

GEOLOGICAL SOCIETY OF AMERICA (GSA)

P.O. Box 9140
Boulder, CO 80301
Ph: 800-472-1988
Fax: 303-447-1133

GEOSYNTHETIC INSTITUTE (GSI)

475 Kedron Ave.
Folsom, PA 19033-1208
Ph: 610-522-8440
Fax: 610-522-8441

GERMANY INSTITUTE FOR STANDARDIZATION (DIN)

Order from a United States publications service.

GLASS ASSOCIATION OF NORTH AMERICA (GANA)

3310 S.W. Harrison St.
Topeka, KS 66611-2279
Ph: 913-266-7013
Fax: 913-266-0272
Internet:www.cssinfo.com/info/gana.html

GRETAG MACBETH (GM)

Munsell Department
ATTN: Customer Service
617 Little Britain Road
New Windsor, NY 12553-6184
Ph: 800-662-2384 or 914-566-7660, Ext 347
Fax: 914-561-0267
Internet: http://www.munsell.com/munsell5.htm

GYPSUM ASSOCIATION (GA)

810 First St. NE, Suite 510
Washington, DC 20002
Ph: 202-289-5440
Fax: 202-289-3707

HARDWOOD PLYWOOD & VENEER ASSOCIATION (HPVA)

1825 Michael Faraday Dr.
P.O. Box 2789
Reston, VA 22090-2789
Ph: 202-435-2900
Fax: 703-435-2537

HEAT EXCHANGE INSTITUTE (HEI)

1300 Sumner Ave
Cleveland, OH 44115-9830
Ph: 216-241-7333
Fax: 216-241-0105

H.P. WHITE LABORATORY (HPW)

3114 Scarboro Rd.
Street, MD 21154
Ph: 410-838-6550

HYDRAULIC INSTITUTE (HI)

9 Sylvan Way, Suite 180
Parsippany, NJ 07054-3802
Ph: 888-786-7744 or 973-267-9700
Fax: 973-267-9053

HYDRONICS INSTITUTE DIVISION OF GAMA (HYI)

35 Russo Pl.
P.O. Box 218
Berkeley Heights, NJ 07922-0218
Ph: 908-464-8200
Fax: 908-464-7818
Internet: www.gamanet.org

IBM CORPORATION (IBM)

Publications
P.O. Box 29570
Raleigh, NC 27626-0570
Ph: 800-879-2755, Option 1
Fax: 800-445-9269
Internet: www.ibmink.ibm.com

ILLUMINATING ENGINEERING SOCIETY OF NORTH AMERICA (IESNA)

120 Wall St., 17th Floor
New York, NY 10005-4001
Ph: 212-248-5000
Fax: 212-248-5017
Internet: www.iesna.org

INDUSTRIAL FASTENERS INSTITUTE (IFI)

1717 East 9th St., Suite 1105
Cleveland, OH 44114-2879
Ph: 216-241-1482
Fax: 216-241-5901
Internet: http://www.industrial-fasteners.org
e-mail: indfast@aol.com

INSECT SCREENING WEAVERS ASSOCIATION (ISWA)

P.O. Box 1018
Ossining, NY 10562
Ph: 914-962-9052
Fax: 914-923-3031

INSTITUTE FOR INTERCONNECTING AND PACKAGING ELECTRONIC CIRCUITS (IPC)

2215 Sanders Rd.
Northbrook, IL 60062-6135
Ph: 847-509-9700
Fax: 847-509-9798
Internet: www.ipc.org
e-mail: orderipc@ipc.org

INSTITUTE OF CLEAN AIR COMPANIES (ICAC)

1660 L St., NW, Suite 1100
Washington, DC 20036-5603
Ph: 202-457-0911
Fax: 202-331-1388
E-mail: sjenkins@icac.com
Internet: icac.com

INSTITUTE OF ELECTRICAL AND ELECTRONICS ENGINEERS (IEEE)

445 Hoes Ln, P. O. Box 1331
Piscataway, NJ 08855-1331
Ph: 732-981-0060 OR 800-701-4333
Fax: 732-981-9667
Internet: http//www.standards.ieee.org
E-mail: customer.service@ieee.org

INSTITUTE OF ENVIRONMENTAL SCIENCES (IES)

940 East Northwest Highway
Mount Prospect, IL 60056
Ph: 847-255-1561
Fax: 847-255-1699

INSULATED CABLE ENGINEERS ASSOCIATION (ICEA)

P.O. Box 440
South Yarmouth, MA 02664
Ph: 508-394-4424
Fax: 508-394-1194
E-mail: www.electricnet.com/orgs/insucbl.htm

INTERNATIONAL APPROVAL SERVICES (IAS)

8501 East Pleasant Valley Rd.

Cleveland, OH 44131
Ph: 216-524-4990
Fax: 216-642-3463
Internet: www.iasapprovals.org

INTERNATIONAL ASSOCIATION OF PLUMBING AND MECHANICAL OFFICIALS (IAPMO)

20001 Walnut Dr., So.
Walnut, CA 91789-2825
Ph: 909-595-8449
Fax: 909-594-3690
Fax for Stds: 909-594-5265
Internet: www.iapmo.org

INTERNATIONAL CONFERENCE OF BUILDING OFFICIALS (ICBO)

5360 Workman Mill Rd.
Whittier, CA 90601-2298
Ph: 310-699-0541
Fax: 310-692-3853

INTERNATIONAL ELECTROTECHNICAL COMMISSION (IEC)

3, rue de Varembe, Case Postale 131
CH-1211 Geneva 20, Switzerland
Ph: 41-22-919-0211
Fax: 41-22-919-0300
Internet: http://www.iec.ch
e-mail: custserv@iec.ch

INTERNATIONAL INSTITUTE OF AMMONIA REFRIGERATION (IIAR)

1200 Nineteenth St., NW, Suite 300
Washington, DC 20036-2912
Ph: 202-857-1110
Fax: 202-223-4579

INTERNATIONAL MUNICIPAL SIGNAL ASSOCIATION (IMSA)

165 East Union St. P.O. Box 539
Newark, NY 14513
Ph: 315-331-2182
Fax: 315-331-8505

INTERNATIONAL ORGANIZATION FOR STANDARDIZATION (ISO)

1, rue de Varembe'
Case Postale 56
CH-1211 Geneve 20
Switzerland
Internet: www.iso.ch

INTERNATIONAL SLURRY SURFACING ASSOCIATION (ISSA)

1200 Nineteenth St., NW, Suite 300
Washington, DC 20036-2401
Ph: 202-857-1160
Fax: 202-223-4579
Internet: http://www.rochester.edu/issa/

INTERNATIONAL TELECOMMUNICATION UNION (ITU)

Order from:
U.S. Dept of Commerce
National Technical Information Service
585 Port Royal Road.
Springfield, VA 22161
Ph: 703-487-4660
FAX: 703-321-8547
For documents not avail from Dept of Commerce:
E-Mail: sales@itu.ch
Fax: 41.22.730.5194

IRON & STEEL SOCIETY (ISS)

186 Thornhill Rd
Warrendale, PA 15086-7528
Ph: 724-776-1353 Ext 1
Fax: 724-776-0430
E-Mail: custserv @ issource.org
Internet: www.issource.org

ISA (ISA)

67 Alexander Drive
P.O. Box 12277
Research Triangle Park, NC 27709
Ph: 919-549-8411
Fax: 919-549-8288
e-mail: ISA@isa.org
Internet: http://www.isa.org

KITCHEN CABINET MANUFACTURERS ASSOCIATION (KCMA)

1899 Preston White Dr.
Reston, VA 20191-5435
Ph: 703-264-1690
Fax: 703-620-6530
Internet: www.kcma.org

MANUFACTURERS STANDARDIZATION SOCIETY OF THE VALVE AND FITTINGS INDUSTRY (MSS)

127 Park St., NE
Vienna, VA 22180-4602
Ph: 703-281-6613
Fax: 703-281-6671

Internet: //cssinfo.com/info/mss/html

MAPLE FLOORING MANUFACTURERS ASSOCIATION (MFMA)

60 Revere Dr., Suite 500
Northbrook, IL 60062
Ph: 847-480-9138
Fax: 847-480-9282
e-mail: mfma@maplefloor.com

MARBLE INSTITUTE OF AMERICA (MIA)

33505 State St.
Farmington, MI 48335
Ph: 810-476-5558
Fax: 810-476-1630

MATERIAL HANDLING INDUSTRY (MHI)

8720 Red Oak Blvd., Suite 201
Charlotte, NC 28217-3992
Ph: 800-345-1815 or 704-676-1190
Fax: 704-676-1199

METAL BUILDING MANUFACTURERS ASSOCIATION (MBMA)

1300 Sumner Ave.
Cleveland, OH 44115-2851
Ph: 216-241-7333
Fax: 216-241-0105

MIDWEST INSULATION CONTRACTORS ASSOCIATION (MICA)

2017 So. 139th Cir.
Omaha, NE 68144
Ph: 402-342-3463
Fax: 402-330-9702

MILITARY HANDBOOKS (MIL-HDBK)

Order from:
Standardization Documents Order Desk
Bldg 4D
700 Robbins AV
Philadelphia, PA 19111-5094
Ph: 215-697-5147
Fax: 215-697-5148
Internet: www.dodssp.daps.mil

MILITARY SPECIFICATIONS (MS)

Order from:
Standardization Documents Order Desk
Building 4, Section D

700 Robbins Ave.
Philadelphia, PA 19111-5094
Ph: 215-697-5147
Fax: 215-697-5148
Internet: www.dodssp.daps.mil

MILITARY STANDARDS (MIL-STD)

Order from:
Standardization Documents Order Desk
Building 4, Section D
700 Robbins Ave.
Philadelphia, PA 19111-5094
Ph: 215-697-2179
Fax: 215-697-2978
Internet: www.dodssp.daps.mil

NACE INTERNATIONAL (NACE)

1440 South Creek Drive
Houston, TX 77084-4906
Ph: 281-228-6200
Fax: 281-228-6300
Internet: www.nace.org

NATIONAL ASSOCIATION OF ARCHITECTURAL METAL MANUFACTURERS (NAAMM)

8 So. Michigan Ave, Suite 100
Chicago, IL 60603
Ph: 312-782-4951
Internet: www.naamm.org
Fax: 312-332-0706

NATIONAL ASSOCIATION OF PLUMBING-HEATING-COOLING CONTRACTORS (NAPHCC)

180 S. Washington Street
P.O. Box 6808
Falls Church, VA 22046
Ph: 800-533-7694
Fax: 703-237-7442

NATIONAL BOARD OF BOILER AND PRESSURE VESSEL INSPECTORS (NBBPVI)

1055 Crupper Ave.
Columbus, OH 43229-1183
Ph: 614-888-2463
Fax: 614-847-1147
e-mail: orders @ nationalboard.org

NATIONAL CABLE TELEVISION ASSOCIATION (NCTA)

1724 Massachusetts Ave. NW
Washington, DC 20036-1969

Ph: 202-775-3550
Fax: 202-775-3698

NATIONAL COUNCIL ON RADIATION PROTECTION AND MEASUREMENTS (NCRP)

7910 Woodmont Ave., Suite 800
Bethesda, MD 20814-3095
Ph: 800-229-2652
Fax: 301-907-8768

NATIONAL DRILLING ASSOCIATION (NDA)

3008 Millwood Avenue
Columbia, SC 29205
Ph: 800-445-8629 or 803-252-5646
Fax: 803-765-0860
email: info@nda4U.com
Internet: http://www.nda4U.com

NATIONAL ELECTRICAL MANUFACTURERS ASSOCIATION (NEMA)

1300 N. 17th St., Suite 1847
Rosslyn, VA 22209
Ph: 703-841-3200
Fax: 703-841-3300
Internet: http//www.nema.org/

NATIONAL ENVIRONMENTAL BALANCING BUREAU (NEBB)

8575 Grovemont Circle
Gaithersburg, MD 20877-4121
Ph: 301-977-3698
Fax: 301-977-9589

NATIONAL FIRE PROTECTION ASSOCIATION (NFPA)

One Batterymarch Park P.O. Box 9101
Quincy, MA 02269-9101
Ph: 800-344-3555
Fax: 800-593-6372
Internet: http://www.nfpa.org
NOTE: The complete set of 1997 NFPA National Fire Codes (13 Vol.) is available for $835.00.

NATIONAL FLUID POWER ASSOCIATION (NFLPA)

3333 No. Mayfair Rd.
Milwaukee, WI 53222-3219
Ph: 414-778-3344
Fax: 414-778-3361
Internet: www.nfpa.com
E-mail: nfpa@nfpa.com

NATIONAL HARDWOOD LUMBER ASSOCIATION (NHLA)

P.O. Box 34518
Memphis, TN 38184-0518
Ph: 901-377-1818
Fax: 901-382-6419
e-mail: nhla@natlhardwood.org

NATIONAL INSTITUTE FOR CERTIFICATION IN ENGINEERING TECHNOLOGIES (NICET)

1420 King Street
Alexandria, VA 22314-2794
Ph: 888-476-4238
Internet: www.nicet.org

NATIONAL INSTITUTE FOR OCCUPATIONAL SAFETY AND HEALTH (NIOSH)

Mail Stop C-13
4676 Columbia Parkway
Cincinnati, OH 45226-1998
Ph: 800-356-4676
Internet: http://www.cdc.gov/niosh/homepage.html
To order pubs for which a fee is charged, order from:
Superintendent of Documents
Government Printing Office
Washington, DC 20402-9325
Ph: 202-512-1800
Fax: 202-512-2250

NATIONAL INSTITUTE OF JUSTICE (NIJ)

National Law Enforcement and Corrections Technology Center
2277 Research Blvd. - Mailstop 1E
Rockville, MD 20850
Ph: 800-248-2742 or 301-519-5060
Fax: 301-519-5179
Internet: http://www.nlectc.org
e-mail: nlectc@aspensys.com

NATIONAL INSTITUTE OF STANDARDS AND TECHNOLOGY (NIST)

Department of Commerce
Gaithersburg, MD 20899-0001
Ph: 301-975-4025
Fax: 301-926-1630
Order Publications From:
Superintendent of Documents
U.S. Government Printing Office (GPO)
Washington, DC 20402
Ph: 202-512-1800
Fax: 202-512-2250

or
National Technical Information Services (NTIS)
5285 Port Royal Rd.
Springfield, VA 22161
Ph: 800-553-6847
Fax: 703-321-8547
Internet: http://ww.gov/ntis.gov

NATIONAL OAK FLOORING MANUFACTURERS ASSOCIATION (NOFMA)

P.O. Box 3009
Memphis, TN 38173-0009
Ph: 901-526-5016
Fax: 901-526-7022

NATIONAL READY-MIXED CONCRETE ASSOCIATION (NRMCA)

900 Spring St.
Silver Spring, MD 20910
Ph: 301-587-1400
Fax: 301-585-4219

NATIONAL ROOFING CONTRACTORS ASSOCIATION (NRCA)

P.O. Box 809261
Chicago, IL 60680-9261
Ph: 800-323-9545
Fax: 708-299-1183

NATIONAL TERRAZZO & MOSAIC ASSOCIATION (NTMA)

3166 DesPlaines Ave., Suite 132
DesPlaines, IL 60018
Ph: 708-635-7744
Fax: 708-635-9127

NATIONAL WOOD WINDOW & DOOR ASSOCIATION (NWWDA)

1400 East Touhy Ave., Suite 470
Des Plaines, IL 60018
Ph: 847-299-5200800-223-2301
Fax: 708-299-1286

NAVAL FACILITIES ENGINEERING COMMAND (NAVFAC)

1510 Gilbert St.
Norfolk, VA 23511-2699
Ph: 757-322-4200
Fax: 757-322-4416

NAVAL FACILITIES ENGINEERING SERVICE CENTER (NFESC)

560 Center Drive
Port Hueneme, CA 93043-4328
Ph: 805-982-5661

NORTH AMERICAN INSULATION MANUFACTURERS ASSOCIATION (NAIMA)

44 Canal Center Plaza, Suite 310
Alexandria, VA 22314
Ph: 703-684-0084
Fax: 703-684-0427

NORTHEASTERN LUMBER MANUFACTURERS ASSOCIATION (NELMA)

272 Tuttle Road
P.O. Box 87A
Cumberland Center, ME 04021
Ph: 207-829-6901
Fax: 207-829-4293

NORTHEAST REGIONAL AGRICULTURAL ENGINEERING SERVICE (NRAES)

Cooperative Extension
152 Riley-Robb Hall
Ithaca, NY 14853-5701
Ph: 607-255-7654
Fax: 607-254-8770
Internet: http://rcwpsun.cas.psu.edu/nraes
E-mail: nraes@cornell.edu

NSF INTERNATIONAL (NSF)

ATTN: Publications
789 Dixboro Rd.
P.O. Box 130140
789 Dixboro Rd.
Ann Arbor, MI 48113-0140
Ph: 734-769-8010
Fax: 734-769-0109
Toll Free: 800-NSF-MARK
Internet: www.nsf.org

PIPE FABRICATION INSTITUTE (PFI)

3211 Jermantown Rd, Ste. 100, Fairfax, VA 22030
Ph: 514-634-3434
Fax: 514-634-9736

PLASTIC PIPE AND FITTINGS ASSOCIATION (PPFA)

800 Roosevelt Rd., Bldg C, Suite 20
Glen Ellyn, IL 60137
Ph: 630-858-6540
Fax: 630-790-3095

PLASTICS PIPE INSTITUTE (PPI)

1801 L St. NW, Suite 600K
Washington, D. C. 20006-1301
Ph: 202-462-9607
Fax: 202-293-0048
Internet: http://www.plasticpipe.org
Order Publications from:
SPI
P. O. Box 753
Waldorf, MD 20604
Ph: 202-974-5332
Fax: 800-541-0736 or 202-296-7359

PLUMBING AND DRAINAGE INSTITUTE (PDI)

45 Bristol Dr., Suite 101.
South Easton, MA 02375
Ph: 508-230-3516
Fax: 508-230-3529
E-Mail: pdhw@tiac.net

PLUMBING AND PIPING INDUSTRY COUNCIL (PPIC)

501 Shatto Place, Suite 402
Los Angeles, CA 90020
Ph: 310-381-3040
Fax: 213-487-3880

PORCELAIN ENAMEL INSTITUTE (PEI)

4004 Hillsboro Pike, Suite 224B
Nashville, TN 37215
Ph: 615-385-5357
Fax: 615-385-5463
Internet: www.porcelainenamel.com

PRECAST/PRESTRESSED CONCRETE INSTITUTE (PCI)

175 West Jackson Blvd., Suite 1859
Chicago, IL 60604
Ph: 312-786-0300

Fax: 312-786-0353
Internet: www.pci.org
e-mail: info@pci.org

RUBBER MANUFACTURERS ASSOCIATION (RMA)

1400 K St., NW
Washington, DC 20005
Ph: 202-682-4800
Fax: 202-682-4854
Order Publications from:
The Mail Room
P. O. Box 3147
Medina, OH 44258
Ph: 800-325-5095 EXT 242 or 330-723-2987
Fax: 330-725-0576

RURAL UTILITIES SERVICE (RUS)

ATTN: Publications
14th and Independence Ave., SW, Room 4028-S
Washington, DC 20250
Ph: 202-720-8674 OR 202-720-8679
Fax: 202-205-3654
Internet: www.usda.gov/rus

SCREEN MANUFACTURERS ASSOCIATION (SMA)

2850 South Ocean Boulevard, Suite 114
Palm Beach, FL 33480-5535
Ph: 561-533-0991
Fax: 561-533-7466
e-mail: fscottfitzgerald@compuserve.com

SHEET METAL & AIR CONDITIONING CONTRACTORS' NATIONAL ASSOCIATION (SMACNA)

4201 Lafayette Center Dr.,
Chantilly, VA 20151-1209
Ph: 703-803-2980
Fax: 703-803-3732
Internet: http://www.smacna.org

SINGLE PLY ROOFING INSTITUTE (SPRI)

200 Reservoir St., Suite 309A
Needham, MA 02494
Ph: 781-444-0242
Fax: 781-444-6111
Internet: www.spri.org

SOCIETY OF AUTOMOTIVE ENGINEERS (SAE)

400 Commonwealth Dr.
Warrendale, PA 15096-0001
Ph: 724-776-4841
Fax: 724-776-5760
Internet: http://www.sae.org
e-mail: publications@sae.org

SOUTHERN BUILDING CODE CONGRESS INTERNATIONAL (SBCCI)

900 Montclair Road
Birmingham, AL 35213-1206
Ph: 205-591-1853
Fax: 205-591-0775

SOUTHERN CYPRESS MANUFACTURERS ASSOCIATION (SCMA)

400 Penn Center Boulevard, Suite 530
Pittsburgh, PA 15235
Ph: 412-829-0770
Fax: 412-829-0844

SOUTHERN PINE INSPECTION BUREAU (SPIB)

4709 Scenic Highway
Pensacola, FL 32504-9094
Ph: 850-434-2611
Fax: 850-433-5594
e-mail: spib@spib.org

THE SOCIETY FOR PROTECTIVE COATINGS (SSPC)

40 24th Street, 6th Floor
Pittsburgh, PA 15222-4656
Ph: 412-281-2331
Fax: 412-281-9992
Internet: www.sspc.org
NOTE: SSPC documents, except as noted otherwise, are available only as a part of the 1995 Steel Structures Painting Manual, 7th Edition @ $115.00.

STEEL DECK INSTITUTE (SDI)

P.O. Box 25
Fox River Grove, IL 60021-0025
Ph: 847-462-1930
Fax: 847-462-1940

Internet: http://www.sdi.org
e-mail: janet@sdi.org

STEEL DOOR INSTITUTE (SDOI)

30200 Detroit Rd.
Cleveland, OH 44145-1967
Ph: 216-899-0010
Fax: 216-892-1404

STEEL JOIST INSTITUTE (SJI)

3127 Tenth Ave., North Ext.
Myrtle Beach, SC 29577-6760
Ph: 843-626-1995
Fax: 843-626-5565

STEEL TANK INSTITUTE (STI)

570 Oakwood Rd.
Lake Zurich, IL 60047
Ph: 847-438-8265
Fax: 847-438-8766
Internet: www.steeltank.com
e-mail: technic@interaccess.com

STEEL WINDOW INSTITUTE (SWI)

1300 Sumner Ave.
Cleveland, OH 44115-2851
Ph: 216-241-7333
Fax: 216-241-0105

TILE COUNCIL OF AMERICA (TCA)

P.O. Box 1787
Clemson, SC 29633-1787
Ph: 864-646-8453
FAX: 864-646-2821

TRUSS PLATE INSTITUTE (TPI)

583 D'Onofrio Dr., Suite 200
Madison, WI 53719
Ph: 608-833-5900
Fax: 608-833-4360

TUBULAR EXCHANGE MANUFACTURERS ASSOCIATION (TEMA)

25 N. Broadway
Tarrytown, NY 10591
Ph: 914-332-0040
Fax: 914-332-1541

UNDERWRITERS LABORATORIES (UL)

333 Pfingsten Rd.
Northbrook, IL 60062-2096
Ph: 847-272-8800
Fax: 847-272-8129
Internet: http://www.ul.com/

Note: First price is for the standard only. Second price is for the standard including the Revision Subscription Service.

UNI-BELL PVC PIPE ASSOCIATION (UBPPA)

2655 Villa Creek Dr., Suite 155
Dallas, TX 75234
Ph: 214-243-3902
Fax: 214-243-3907

U. S. ARMY ENVIORNMENTAL HYGIENE AGENCY (USAEHA)

Waste Disposal Engineering Division
Aberdeen Proving Ground, MD 21010-5422
Ph: 410-436-3652

WATER ENVIRONMENT FEDERATION (WEF)

601 Wythe St.
Alexandria, VA 22314-1994
Ph: 703-684-2452
Fax: 703-684-2492
Internet: www.wef.org

WATER QUALITY ASSOCIATION (WQA)

4151 Naperville Rd.
Lisle, IL 60532
Ph: 630-505-0160
Fax: 630-505-9637

WEST COAST LUMBER INSPECTION BUREAU (WCLIB)

P.O. Box 23145
Portland, OR 97281
Ph: 503-639-0651

Fax: 503-684-8928

WESTERN WOOD PRESERVERS INSTITUTE (WWPI)

7017 N.E. Highway 99 # 108
Vancover, WA 98666
Ph: 360-693-9958
Fax: 360-693-9967

WESTERN WOOD PRODUCTS ASSOCIATION (WWPA)

Yeon Bldg.
522 SW 5th Ave.
Suite 500
Portland, OR 97204-2122
Ph: 503-224-3930
Fax: 503-224-3934

WOOD MOULDING AND MILLWORK PRODUCERS ASSOCIATION (WMMPA)

507 First Street
Woodland, CA 95695
Ph: 916-661-9591
Fax: 916-661-9586

-- End of Section --

SECTION 01100

GENERAL

PART 1 GENERAL

1.1 INQUIRIES

Pursuant to SECTION 00100 paragraph titled**"Explanation to Prospective Bidders"**, any inquiries regarding this Invitation, before bids are opened, should be addressed to the District Engineer, Kansas City District, Corps of Engineers, 700 Federal Building, Kansas City, Missouri 64106, ATTN: **Mr. Kent Myers**. Inquiries for which oral explanation or advice on the plans and specifications will suffice may be referred to **Mr. Myers** by calling Area Code 816-983-3399. Telephone calls concerning the mailing of plans and specifications should be made to Contracting Division at Area Code 816-983-3975. Collect telephone calls will not be accepted. (KCDO APR 84)

1.2 SUPERINTENDENCE OF SUBCONTRACTORS

(a) The Contractor shall be required to furnish the following:

(1) If more than 50% and less than 70% of the value of the contract work is subcontracted, one superintendent shall be provided at the site and on the Contractor's payroll to be responsible for coordinating, directing, inspecting and expediting the subcontract work.

(2) If 70% or more of the value of the work is subcontracted, the Contractor shall be required to furnish two such superintendents to be responsible for coordinating, directing, inspecting and expediting the subcontract work.

(b) If the Contracting Officer, at any time after 50% of the subcontracted work has been completed, finds that satisfactory progress is being made, he may waive all or part of the above requirement for additional superintendence subject to the right of the Contracting Officer to reinstate such requirement if at any time during the progress of the remaining work he finds that satisfactory progress is not being made.

1.3 IDENTIFICATION OF EMPLOYEES

The Contractor shall be responsible for furnishing to each employee and for requiring each employee engaged on the work to display identification as may be approved and directed by the Contracting Office. All prescribed identification shall immediately be delivered to the Contracting Officer, for cancellation upon the release of any employee. When required by the Contracting Officer the Contractor shall obtain and submit fingerprints of all persons employed or to be employed on the project.

1.4 APPLICATION OF WAGE RATES

The inclusion of the Davis-Bacon Act General Wage Decision or the Service

Contract Act Wage Determination in the solicitation is a statutory requirement. It is not a representation by the U.S. Army Corps of Engineers that any specific work task can be performed by any specific trade. Which work tasks can be performed by what trades depends on and is determined by the prevailing area practice for the local area where the contract is being performed. It is the sole responsibility of the **bidder** to determine and comply with the prevailing area practice. Inquiries regarding a prevailing area practice should be directed to the Corps of Engineers, Contractor Industrial Relations Specialist (telephone number 816-983-3723) or to the Department of Labor Regional Wage and Hour Division.

Application of wage rates and fringe benefits: For the application of wage rates and fringe benefits contained in the Decisions of the Secretary of Labor, attached to and a part of this contract, Highway rates apply to the construction, alteration or repair of roads, streets, highways, runways, taxiways, alleys, trails, paths, parking areas, and other similar projects. All other construction is considered Heavy Construction.

1.5 PAYMENTS TO SUBCONTRACTORS

The Contractor's attention is directed to CONTRACT CLAUSE titled "Payment Under Fixed-Price Construction Contracts." In addition to the requirements set forth in the referenced paragraph, the Government will reimburse the Contractor, upon request, for amount of premiums paid by the subcontractors for performance and payment bonds (including coinsurance and reinsurance agreements, when applicable) after the Contractor furnishes evidence of full payment to the surety.

1.6 PAYMENTS TO CONTRACTOR (KCD MAY 90 - FORMERLY FAR 52.2/9101(a))

The following is an example of a Contractor's release of claims clauses required to comply with the provisions of paragraph (h) of the CONTRACT CLAUSE titled "Payments Under Fixed-Price Construction Contracts":

RELEASE OF CLAIMS

The undersigned Contractor under contract dated _____, 2000, between the United States of America and said Contractor for the _____ located at _____, in accordance with paragraph (h) of the CONTRACT CLAUSE titled "Payments Under Fixed-Price Construction Contracts" of said contract, hereby releases the United States, its officers, agents, and employees from any and all claims arising under or by virtue of said contract or any modification or change thereof except with respect to those claims, if any, listed below:

(Here itemize claims and amounts due.)

1.7 PARTNERING

The Government intends to encourage the foundation of a cohesive partnership with the Contractor and its subcontractor. This partnership will be structured to draw on the strengths of each organization to identify and achieve mutual goals with the intent to complete the Contract

within budget, on schedule and in accordance with plans and specifications. This partnership will be bilateral in makeup, and participation will be totally voluntary. Any cost associated with implementing this partnership will be agreed to by the Contractor and the Government, and will be shared equally with no change in Contract price. To implement this partnership initiative, it is anticipated that thirty (30) days after Notice to Proceed, a team building workshop will be conducted. Follow-up workshops will be held periodically throughout the duration of the Contract as agreed to by the Contractor and the Government.

1.8 PROSPECTIVE CONTRACTOR RESPONSIBILITY

Each bidder shall furnish, within 3 calendar days after receipt of request therefor, data which will show the bidder's ability to perform the work or services required by this Invitation for Bids. Such data shall include as a minimum: Bank certification of financial capability, or a financial statement not over 60 days old, which will be treated as confidential (if over 60 days old, a certificate shall be attached thereto stating that the financial condition is substantially the same or, if not the same, the changes that have taken place); names of commercial and financial reporting agencies from whom credit reports may be obtained; trade creditors; name and address of bonding company; business and construction experience; past record of performance of Government contracts; and construction plant and equipment available for this job, with resume of work in progress or other data that will assure that the bidder is in a position to perform the work within the time specified.

In addition, if the bid exceeds $1,000,000, the bidder shall furnish upon request, a certified statement listing:

(a) Each contract awarded to him within the preceding three-month period exceeding $1,000,000 in value with brief description of the contract.

(b) Each contract awarded to him within the preceding three-year period not already physically completed and exceeding $5,000,000 in value with brief description of the contract.

(c) If the prospective Contractor is a joint venture, each joint venture member will be required to submit the above defined certification. There shall also be furnished any other available information which will serve to substantiate the bidder's qualifications as a responsible prospective Contractor. (KCD APR 84)

1.9 PERFORMANCE OF WORK BY CONTRACTOR

Bidder's attention is directed to SPECIAL CLAUSE titled "Performance of Work by Contractor." The successful bidder will be required to furnish the Contracting Officer, a description of the work which he will perform with his own organization (e.g., earthwork, paving, etc.), the percentage of the total work this represents, and the estimated cost thereof. Such description of work to be performed by the Contractor's own organization shall be furnished to the Contracting Officer within 10 days after award of the contract.

1.10 LABORATORY AND TESTING FACILITIES

The Contractor shall use a Corps of Engineer's certified laboratory for all testing. A list of COE certified laboratories is available at http://www.wes.army.mil/SL/MTL/NatStatesTbl.htm. (KCD)

1.11 LIMITS OF RIGHT-OF-WAY

Limits of right-of-way within private property shall be established as soon as practicable and at least 30 days prior to commencing work in the immediate vicinity, to allow time for relocation of fences by owners of property adjacent to the location of the work.

1.12 UNAVAILABILITY OF RIGHT-OF-WAY

The tracts listed below and shown on the map cutouts at the end of this section are not presently available to the Contractor but will be available on **30 March 2003**. The Contractor shall schedule his work to not require access to these areas prior to this date, unless otherwise notified by the Contracting Officer.

PERMANENT CONSTRUCTION EASEMENT:

A PERMANENT RIGHT OF WAY EASEMENT BEING DESCRIBED AS: ALL OF LOT 309, PROSPECT HILL, A SUBDIVISION IN KANSAS CITY, JACKSON COUNTY, MISSORI, CONTAINING 10,131.81 SQUARE FEET, MORE OR LESS.

TEMPOARY CONSTRUCTION EASEMENTS:

A TEMPORARY CONSTRUCTION EASEMENT FOR A PORTION OF LOT 308, PROSPECT HILL, A SUBDIVISION IN KANSAS CITY, JACKSON COUNTY, MISSOURI, AND BEING MORE PARTICULARLLY DESCRIBED AS FOLLOWS: BEGINNING AT THE NORTH EAST CORNER OF LOT 308; THENCE S00°00'00'E, A DISTANCE OF 75.06'; THENCE N89°17'46"W, A DISTANCE OF 26.77', TO THE SOUTHWESTERLY LINE OF LOT 308; THENCE ALONG THE SOUTHWESTERLY LINE N62°08'25"W, A DISTANCE OF 105.48' TO THE NORTHWEST CORNER OF LOT308; THENCE ALONG THE NORTH LINE OF LOT 308 S89°17'46"E, A DISTANCE OF 174.28' TO THE POINT OF BEGINNING.

A TEMPORARY CONSTRUCTION EASEMENT FOR A PORTION OF LOT 273, PROSPECT HILL, A SUBDIVISION IN KANSAS CITY, JACKSON COUNTY, MISSOURI, AND BEING MORE PARTICULARLLY DESCRIBED AS FOLLOWS: COMMENCING AT THE NORTH EAST CORNER OF LOT 273; THENCE N62°08'25"W ALONG THE NORTHERLY LINE OF LOT 273, A DISTANCE OF 1.70'; THENCE N89°17'46"W, A DISTANCE OF 55.30', TO THE WESTERLY LINE OF LOT 273; THENCE N27°51'35"E ALONG THE WESTERLY LINE, A DISTANCE OF 26.92' TO THE NORTHWEST CORNER OF LOT273; THENCE S62°08'25"E ALONG THE NORTHERLY LINE OF LOT 273, A DISTANCE OF 48.30' TO THE POINT OF BEGINNING, CONTAINING 650.12 SQUARE FEET, MORE OR LESS.

A TEMPORARY CONSTRUCTION EASEMENT FOR A PORTION OF LOT 274 AND LOT, PROSPECT HILL, A SUBDIVISION IN KANSAS CITY, JACKSON COUNTY, MISSOURI, AND BEING MORE PARTICULARLLY DESCRIBED AS FOLLOWS: BEGINNING AT THE NORTH EAST CORNER OF LOT 274; THENCE S27°51'35"W ALONG THE EASTERLY LINE OF LOT 274, A DISTANCE OF 26.92'; THENCE N89°17'46"W, A DISTANCE OF 70.98' TO THE WESTERLY LINE OF THE EAST 12' OF LOT 275; THENCE ALONG THE WESTERLY LINE OF

SAID EAST 12' N27°51'35"E, A DISTANCE OF 61.45' TO THE SOUTHERLY LINE OF LOT 308; THENCE S62°08'25"E ALONG SAID SOUTHERLY LINE, A DISTANCE OF 62' TO THE POINT OF BEGINNING CONTAINING 3,584.30 SQUARE FEET.

1.13 UNAVAILABILITY OF UTILITIES

The responsibility shall be upon the Contractor to provide and maintain at his own expense, adequate utilities for his use for construction and domestic consumption, and to install and maintain necessary connections and lines for same, but only at such locations and in such manner as may be approved by the Contracting Officer. Before final acceptance, temporary connections and lines installed by the Contractor shall be removed in a manner satisfactory to the Contracting Officer.

1.14 TIME EXTENSIONS FOR UNUSUALLY SEVERE WEATHER

(a) This provision specifies the procedure for determination of time extensions for unusually severe weather in accordance with the CONTRACT CLAUSE titled "Default: (Fixed Price Construction)." In order for the Contracting Officer to award a time extension under this clause, the following conditions must be satisfied:

(1) The weather experienced at the project site during the contract period must be found to be unusually severe, that is, more severe than the adverse weather anticipated for the project location during any given month.

(2) The unusually severe weather must actually cause a delay to the completion of the project. The delay must be beyond the control and without the fault or negligence of the Contractor.

(b) The following schedule of monthly anticipated adverse weather delays is based on National Oceanic and Atmospheric Administration (NOAA) or similar data for the project location and will constitute the base line for monthly weather time evaluations. The Contractor's progress schedule must reflect these anticipated adverse weather delays in all weather dependent activities.

MONTHLY ANTICIPATED ADVERSE WEATHER DELAY

WORK DAYS BASED ON (5) DAY WORK WEEK

Jan	Feb	Mar	Apr	May	Jun	Jul	Aug	Sep	Oct	Nov	Dec
(8)	(4)	(4)	(5)	(5)	(5)	(4)	(4)	(4)	(4)	(3)	(5)

(c) Upon acknowledgment of the Notice to Proceed (NTP) and continuing throughout the contract, the Contractor will record on the daily CQC report, the occurrence of adverse weather and resultant impact to normally scheduled work. Actual adverse weather delay days must prevent work on critical activities for 50 percent or more of the Contractor's scheduled work day. The number of actual adverse weather delay days shall include days impacted by actual adverse weather (even if adverse weather occurred in previous month), be calculated chronologically from the first to the

last day of each month, and be recorded as full days. If the number of actual adverse weather delay days exceeds the number of days anticipated in paragraph b, above, the Contracting Officer will convert any qualifying delays to calendar days, giving full consideration for equivalent fair weather work days, and issue a modification in accordance with the CONTRACT CLAUSE titled "Default (Fixed Price Construction)." (ER 415-1-15)

1.15 REQUIRED INSURANCE SCHEDULE

In accordance with CONTRACT CLAUSE titled "Insurance - Work On A Government Installation," the Contractor shall procure and maintain during the entire period of his performance under this contract the following minimum insurance.

Type	Amount
Workmen's Compensation State Statute	coverage complying with applicable
Employers' Liability	minimum amount of $100,000.00
General Liability on Comprehensive Form of Policy which includes, but is not limited to, insurance for all work required herein	minimum limits of $500,000 per occurrence for bodily injury
Comprehensive Automobile Liability	minimum limits of $200,000 per person and $500,000 per occurrence for bodily injury, and $20,000 per occurrence for property damage

(End of clause)

1.16 INTERRUPTIONS TO UTILITY SERVICES

A schedule showing the approximate times of interruptions of utility services and roads shall be submitted approximately 30 days in advance of interrupting services to make connections. Where it is necessary to interrupt services to make connections and the period of interruption will last more than 2 hours, the connections shall be performed on Saturday or Sunday, unless otherwise approved by the Contracting Officer. Final arrangements shall be made with the Contracting Officer at least 72 hours in advance of the scheduled times of interruptions.

1.17 COORDINATION BETWEEN CONTRACTORS

(See CONTRACT CLAUSE titled "Other Contracts.") Construction work on another contract is underway concurrently with this Contract. The obligations of the Contractor under this Contract will include jointly planning and scheduling the work, on a cooperative basis, with the other Contractor involved in order to minimize delays and interferences. Alterations to systems installed under the other contract, including

connections to sewer, waterlines, and bituminous pavement shown as existing, may not be in place.

1.18 COOPERATION BETWEEN THE CONTRACTOR AND UTILITY COMPANIES

Relocation of utilities by the utility companies listed in 02001 will be necessary concurrently with the work under this contract. All coordinating shall be through, or with the knowledge of, the Contracting Officer. (KCD)

Coordination: The Contractor shall coordinate and schedule the work in cooperation with each utility company, to minimize delays and interferences. After receipt of notice to proceed, the Contractor shall notify each utility company and make the necessary arrangements for the utility relocation. The Contractor shall also notify each utility company 30 days in advance of commencing construction work within the vicinity of the utility line.

1.19 SALVAGE MATERIALS AND EQUIPMENT (JAN 1965)

The Contractor shall maintain adequate property control records for all materials or equipment specified to be salvaged. These records may be in accordance with the Contractor's system or property control, if approved by the property administrator. The Contractor shall be responsible for the adequate storage and protection of all salvaged materials and equipment and shall replace, at no cost to the Government, all salvage materials and equipment which are broken or damaged during salvage operations as the result of his negligence, or while in his care.

1.20 DATE OF SAFETY AND HEALTH REQUIREMENTS MANUAL (EM 385-1-1)

(a) The date of the U.S. Army Corps of Engineers Safety and Health Requirements Manual in effect on the date of this solicitation is 3 September 1996. See Section 00700, Contract Clause titled "Accident Prevention."

(b) Section 06.I of EM 385-1-1 is deleted. Job hazard analysis for confined space entry procedures is still required, as per 01.A.09 of EM 385-1-1. OSHA Standards 29 CFR 1910.146 or 29 CFR 1926 shall apply.

(c) Before initiation of work at the job site, an accident prevention plan, written by the prime contractor for the specific work and hazards of the contract and implementing in detail the pertinent requirements of EM 385-1-1, will be reviewed and found acceptable by designated Government personnel.

1.21 COMPLIANCE WITH OCCUPATIONAL SAFETY AND HEALTH ACT (OSHA)

The Contractor shall comply with OSHA standards as well as the most current edition of the Corps of Engineers General Safety Requirements Manual (EM 385-1-1). The OSHA standards are subject to change and such changes may affect the Contractor in his performance under the contract. It is the Contractor's responsibility to know such changes and effective dates of

changes.

1.22 CONSTRUCTION EQUIPMENT OWNERSHIP AND OPERATING EXPENSE SCHEDULE

Whenever a modification or equitable adjustment of contract price is required, the Contractor's cost proposal for equipment ownership and operating expenses shall be as set forth in SPECIAL CLAUSE titled "Equipment Ownership and Operating Expense Schedule." A copy of EP 1110-1-8 "Construction Equipment Ownership and Operating Expense Schedule" dated August 1995 can be ordered from the Government Printing Office (GPO) by calling Telephone No. 202-512-1800.

1.23 SHOP DRAWINGS

The Contractor's attention is directed to clause "Specifications and Drawings for Construction" of the Contract Clauses.

1.24 SUBMITTALS

(a) Submittal Procedures. See Division One SECTION: SUBMITTAL PROCEDURES.

(b) Shop Drawings shall be submitted in ample time to secure approval prior to the time the items covered thereby are to be delivered to the site. ENG Form 4025 and 4026 shall be used for the transmittal of shop drawings. Unless otherwise specified, shop drawings shall be submitted not less than 30 days before commencement of fabrication of fabricated items and not less than 15 days before delivery of standard stock manufactured items. Where materials are stock with the manufacturer, catalog data, including specifications and full descriptive matter, may be submitted as shop drawings. When catalog includes nonapplicable data, the applicable data shall be clearly designated and identified by item number, item name, and name of manufacturer. Shop drawings submitted (including initial and final submittals) shall be reproductions on high quality paper with clear and legible print. Drawings shall generally be bordered a minimum of one inch and trimmed to neat lines and unless otherwise specified, the minimum scale shall be 3/8-inch to the foot. Shop drawings quality will be subject to approval. Each shop drawing, including catalog data, shall be identified with a title block including the name of Contractor, contract number, name and location of project, and name of item of work or structure to which the shop drawing applies. Material fabricated or delivered to the site before approved shop drawings have been returned to the Contractor will be subject to rejection. NO CONSTRUCTION OR INSTALLATION SHALL BE DONE FOR ANY ITEM REQUIRING SHOP DRAWINGS, UNTIL ALL SHOP DRAWINGS FOR THAT ITEM HAVE BEEN APPROVED.

(c) As-Built Shop Drawings: Upon completion of the work under this contract, the Contractor shall furnish five complete sets of prints or one complete set of reproducibles of all shop drawings as finally approved. These drawings shall show all changes and revisions made up to the time the equipment is completed and accepted. The quality of the reproducibles and prints is subject to approval.

(d) As-Built Drawings: The Contractor shall maintain three separate sets of red-lined, full scale, as-built construction drawings marked up to fully

indicate as-built conditions. These drawings shall be maintained in a current condition at all times until completion of the work, and shall be available for review by Government personnel at all times. All variations from the contract drawings, for whatever reason, including those occasioned by modifications, optional materials, and the required coordination between trades, shall be indicated. These variations shall be shown in the same general detail utilized in the contract drawings. In addition, the Contractor shall indicate on the As-Built Drawings, the brand-name, description, location, and quantity of any and all materials used which contain asbestos. The Contractor shall also be responsible for updating the Government-furnished CADD files to reflect the current as-built conditions throughout the duration of the project. The updated CADD design files shall be maintained in the Intergraph Microstation format consistent with the graphic standards established in the CADD contract drawings provided by the Government. The Contractor will be provided a copy of the Tri-Service CADD standards to facilitate his efforts in the maintenance of design files. The updated CADD files shall be reviewed by the Government on a monthly basis during the progress payment evaluation. The Contractor shall be prepared to demonstrate the status of the updated CADD files in his on-site office. The as-built utility drawings shall show locations and elevations of all underground new utilities and existing utilities encountered, including dimensions from permanent structures and/or survey locations. The submittal requirements for as-built utility drawings shall be shown as separate activities on the Contractor-prepared network analysis. Upon completion of the work, the marked-up drawings and the updated CADD files shall be furnished to the Contracting Officer on CD. In multiphased construction where portions of a system are to be turned over to the user prior to completion of the project, the marked-up drawings for that portion shall be furnished to the Contracting Officer at that time.(MRD ltr 30 Oct 70 and KCD 8 Apr 91)

(e) CADD Files: The Government will provide to the Contractor, within 30 calendar days after Notice of Award, copies of the CADD computer files of the contract drawings for the production of as-built drawings. These files will be in Intergraph Microstation format. The Government provides no warranty, expressed or implied, of the CADD computer files. The Contractor shall assume all responsibility to verify the CADD drawing files. The Contractor will not utilize the CADD drawing computer files to resolve dimensional or other discrepancies. The Government will not guarantee the measurable accuracy of the CADD drawing computer files.

(f) Purchase Orders: Each purchase order issued by the Contractor or his subcontractors for materials and equipment to be incorporated into the project, shall be maintained on file at the Contractor's field office for inspection and review by Government representatives. Each purchase order shall (1) be clearly identified with applicable DA contract number, (2) carry an identifying number, (3) be in sufficient detail to identify the material being purchased, (4) indicate a definite delivery date, and (5) display the DMS priority rating. At the option of the Contractor, the copies of the purchase orders may or may not indicate the price of the articles purchased. (MRD Ltr 22 Oct 74)

1.25 SPECIAL REFERENCES

(a) Shop Drawings. Bidder's attention is directed to SPECIAL CLAUSE titled "Shop Drawings." The basic requirements for Shop Drawings are set forth in the CONTRACT CLAUSES and SPECIAL CLAUSES.

(b) Approved Equal. Bidder's attention is directed to SPECIAL CLAUSE titled "Approved Equal."

(c) Payment to Subcontractors. Bidder's attention is directed to SPECIAL CLAUSE titled "Payments to Subcontractors."

1.26 DIFFERENCES IN DRAWINGS

In addition to the provisions of CONTRACT CLAUSE paragraph "Specifications and Drawings for Construction," the structural drawings shall govern in cases where they differ from the architectural drawings.

1.27 LAYOUT OF WORK (1965 APR OCE)

(a) The Contractor shall furnish, at his own expense, such stakes, templates, platforms, equipment, tools and material, and all labor as may be required in laying out the work. It shall be the responsibility of the Contractor to Layout the Work based on the survey data provided on the drawings, maintain and preserve all stakes and other marks until authorized to remove them, and if such marks are destroyed, by the Contractor or through his negligence prior to their authorized removal they may be replaced by the Contractor, at no attitional cost to the Government. The Contracting Officer may require that work be suspended at any time when location and limit marks established by the Contractor are not reasonably adequate to permit checking of the work.

(b) Records of Contractor-performed survey activities shall be kept in complete, accurate, and legible field notes. The format shall conform to established standards for such records. Prior to any surveys, the Contractor shall submit the field note format for approval.

(c) The layout of work shall be under the direction of a competent survey party chief who has the following minimum qualifications: (1) high school graduate; (2) 7 years survey experience; (3) 4 years experience on construction related survey activities, and (4) 1 year experience as survey party chief.

1.28 PLANTS AVAILABLE

Each bidder shall, upon request of the Contracting Officer, furnish a list of the plants available to the bidder and proposed for use on the work.

1.29 QUANTITY SURVEYS USING DRAWING FINISH LINES

Where the TECHNICAL PROVISIONS provide for using the finish lines on drawings as the final lines for quantity measurement purposes, the Contractor shall, in addition to the requirements set forth in SPECIAL CLAUSE paragraph titled "Quantity Surveys", make final surveys at least at

all locations (stations) where the Contractor performed original surveys. (KCD 23 Jan 76)

1.30 DAMAGE TO WORK (1966 MAR OCE)

(a) The responsibility for damage to any part of the work to be performed under this contract shall be as set forth in the CONTRACT CLAUSE titled "Permits and Responsibilities." However, if the cofferdam(s) is constructed in accordance with plans and progress schedules approved by the Contracting Officer, but is overtopped by flood and such flood causes damage to the cofferdam or if any part of the permanent work is damaged by flood or earthquake, which damage is not due to the failure of the Contractor to take reasonable precaution or to exercise sound engineering and construction practices in the conduct of the work, the Contractor will make the repairs ordered by the Contracting Officer and full compensation for such repairs will be made at the applicable contract unit or lump sum prices as fixed and established in the contract. If, in the opinion of the Contracting Officer, there are no contract unit or lump sum prices applicable to any part of such damaged work, an equitable adjustment pursuant to Contract Clause entitled, Changes, of the contract, will be made as full compensation therefor.

(b) The Contractor may, subject to approval of the Contracting Officer, flood or breach the cofferdam during a rise prior to, and in anticipation of, natural flooding due to overtopping. Such flooding or breach will be considered the same as though the cofferdam, if constructed in accordance with plans and progress schedules approved by the Contracting Officer, has been overtopped, in which event an equitable adjustment will be made for damage to the cofferdam and/or any part of the permanent work, as provided in (a) above.

1.31 AGGREGATE SOURCES (1965 MAY OCE)

(a) Concrete aggregates may be furnished from any source indicated in SECTION 03311or from any source designated by the Contractor and approved by the Contracting Officer, subject to the conditions hereinafter stated.

(b) After the award of the contract, the Contractor shall designate in writing only one source or combination of sources from which he proposes to furnish aggregates. The Contractor shall designate only a single source or single combination of sources for aggregates. If a source for coarse or fine aggregate so designated by the Contractor is not approved for use by the Contracting Officer, the Contractor may not submit for approval other sources but shall furnish the coarse or fine aggregate, as the case may be, from an approved source listed above at no additional cost to the Government.

(d) Listing of a concrete aggregate source is not to be construed as approval of all material from the source. The right is reserved to reject materials from certain localized areas, zones, strata, or channels when such materials are unsuitable for concrete aggregate as determined by the Contracting Officer. Materials produced from an approved source shall meet

all the requirements of Section: 03311 - Portland Cement Concrete Structures of the Technical Provisions of these specifications.

1.32 EXISTING ROADS

Where roads under construction follow or tie into existing roads open to traffic, the roads constructed under such conditions shall be open and passable to traffic at all times during construction. Roadbeds shall be maintained to eliminate hazards to traffic, insure a reasonably smooth riding surface, and to provide positive drainage by constant maintenance of sufficient crowns and ditches as construction progresses. During rainy or inclement periods, the roads shall be kept passable by applying adequate surfacing material to the roadbed or by providing a full time attendant to offer assistance to motorists. Upon failure to comply with foregoing requirements, the Contracting Officer reserves the right to direct non-Government sources to correct deficiencies with costs deducted from payment due to the Contractor.

1.33 APPROVED EQUAL

The drawings and the TECHNICAL PROVISIONS of these specifications may, in some instances, refer to certain items of equipment, material, or article by trade name. References of this type shall not be construed as limiting competition, but shall be regarded as establishing a standard of quality. In this respect, the Contractor's attention is directed to CONTRACT CLAUSE titled "Material and Workmanship."

1.34 SCHEDULE OF WORK

The Contractor's attention is directed to CONTRACT CLAUSE titled "Schedule for Construction Contracts," wherein if, in the opinion of the Contracting Officer, the Contractor falls behind the approved schedule, the Contractor shall take steps necessary to improve its progress, including those that may be required by the Contracting Officer.

1.35 PROTECTION OF UTILITY LINES

It shall be the Contractor's responsibility to protect all existing utility lines from damage during excavation for utilities systems. Any damage resulting to existing utility systems shall be repaired by the Contractor, to the satisfaction of the contracting officer, at no additional cost to the Government.

1.36 MODIFICATIONS PRIOR TO DATE SET FOR OPENING BIDS

The right is reserved, as the interest of the Government may require, to revise or amend the specifications or drawings or both prior to the date set for opening bids. Such revisions and amendments, if any, will be announced by an amendment or amendments to this Invitation for Bids. If the revisions and amendments are of a nature which requires material changes in quantities or prices bid or both, the date set for opening bids

may be postponed by such number of days as in the opinion of the issuing officer will enable bidders to revise their bids. In such cases, the amendment will include an announcement of the new date for opening bids. (KCD APR 84)

1.37 FUNDS AVAILABILITY STATEMENTS

Funds are not presently available for this procurement. No contract award will be made until appropriated funds are made available from which payment for contract purposes can be made.

1.38 EXPEDITING NOTICE TO PROCEED

Notwithstanding the requirements of Block 12 on page 00010-1 of SECTION 00010 and SECTION 00100 paragraph titled "Late Submissions, Modifications, and Withdrawals of Bids," in order to expedite award of contract and issuance of NOTICE TO PROCEED, it is requested that an officer of the company or corporation determined to be the successful bidder shall appear in the office of the Contracting Officer, Kansas City District, Corps of Engineers, 757 Federal Building, 601 East 12th Street, Kansas City, Missouri, for signing contract documents. Therefore, upon written acceptance of this bid, mailed or otherwise furnished within 60 calendar days after the date of opening of bids, it is requested that the successful bidder shall within 48 hours after receipt of notification appear in the office of the Commander and execute Notice to Proceed documents, and give performance and payment bonds on Government Standard forms 25 and 25A with good and sufficient surety. It is also requested that the successful bidder furnish insurance certificates required in SPECIAL CLAUSE titled "Required Insurance Schedule" at this time.

1.39 UNEXPECTED HAZARDOUS SUBSTANCES

In the event that suspected hazardous substances are revealed during construction activities, all such construction activities in the immediate area shall be immediately suspended. Hazardous substances for purposes of this specification only, shall be defined as CERCLA hazardous substances, infectious or radioactive wastes, asbestos or oil. The Contractor shall leave the materials undisturbed and shall immediately report the find to the Contracting Officer's Representative (COR) so that proper authorities can be notified. The Contractor shall not resume construction activities in the vicinity of the suspected hazardous substances until written clearance is received from the COR. Identification and removal of any such materials will be conducted in accordance with all Federal, state and local environmental laws and regulations according to the CONTRACT CLAUSE titled "Differing Site Conditions."

1.40 UNEXPECTED DISCOVERY OF ASBESTOS ON CONSTRUCTION (RENOVATION AND DEMOLITION)

The buildings and areas to be renovated or demolished have been surveyed for the presence of asbestos-containing materials. This survey is not a warranty that asbestos-containing materials are either not present or limited to the amounts found in the survey. Should suspected

asbestos-containing material be encountered, the Contractor shall promptly, and before the conditions or the substance encountered is disturbed, give a written notice to the Contracting Officer of the suspected asbestos-containing material conditions encountered. As directed by tee Contracting Officer, the Contractor shall remove and dispose of any and all asbestos-containing material as necessary to accomplish the required work which shall be performed in accordance with all pertinent local, state, and federal laws. An equitable adjustment will be made to the Contractor in accordance with the CONTRACT CLAUSE entitled "Changes", for the additional work directed by the Contracting Officer.

1.41 ASBESTOS-CONTAINING MATERIALS

Bidders are advised that non-friable asbestos-containing materials have been identified on the Downstream Channel Bin Walls, as indicated on the drawings. The Contractor shall exercise care so the non-friable asbestos-containing materials will not become friable during the performance of the work. If the Contractor decides to remove the bin walls or a protion of the bin walls, to facilitate bridge and channel construction, he shall submit an Asbestos Abatement Plan for approval and all work shall be performed in accordance with all state and federal regulations, including disposal.

SD-01 Data

Asbestos Abatement Plan; G, RE

1.42 SURVEY MARKERS

Reference is made to CONTRACT CLAUSE titled "Permits and Responsibilities", Chapter 60 of the Missouri Revised Statutes 1969, and rules titled "Maintenance of the Original US Public Land Survey Corners" adopted by the Division of Geology and Land Survey, Missouri Department of Natural Resources. The Contractor shall be responsible for removing and relocating survey markers. Relocation shall be performed by a professional registered Land Surveyor.

1.43 DEMOLITION

Disposal of demolition waste shall be in accordance with all applicable Federal, State and local regulations, including "Chapter 260, RSMO" of the "Missouri Department of Natural Resources."

1.44 EXCAVATION NOTIFICATION

Prior to any excavation on either public or private properties, Missouri law requires that you notify all owners and operators of underground facilities in your dig site. Missouri One Call System (MOCS) can help you comply with the law; "Chapter 319, RSMO" of the "Missouri Department of Natural Resources," by calling this one toll-free number 1-800-344-7483.

1.45 MISSOURI SALES AND USE TAX

In accordance with FAR Clause 52.229, notice is given that the contract price excludes the Missouri sales tax and compensating (use) tax on all sales of tangible personal property and materials purchased by the Contractor or subcontractors for the construction of projects, including repairing or remodeling facilities, for the United States. In accordance with Section 144.062, RSMo., the Contracting Officer will issue and furnish to the Contractor an exemption certificate (example copy appears at the end of this section) for this project with the Notice to Proceed. The Contractor and the subcontractors will use the exemption certificate for this project in the purchase of supplies, materials and furnishings for incorporation in the project. The Contractor and the subcontractors shall furnish a copy of such certificate to all suppliers/materialmen from whom such purchases are made, and the suppliers shall execute invoices covering the same bearing the number of such certificate. (KCD OC)

1.46 BRIDGE CLOSURE

The Contractor shall close the Prospect Street bridge and place all necessary Detour Signs within two (2) weeks after receiving the Notice to Proceed. At this time the Contractor shall submit his Traffic Control Plan to the Contracting Officer for approval. Final approval of the Traffic Control Plan will be subject to review comments, and may require alterations to the the plan.

SD-07 Schedules

Traffic Control Plan; G, RE

1.47 MILESTONE DATES

The Contractor shall not place any material in the existing channel until Brush Creek's flow has been diverted thru the new bridge span.

The KCMO Waterline must be relocated and in service before 1 June 2003.

KCPL Conduit ????

Prospect Bridge shall be available for use by Emergency Vehicles no later than 31 December 2003.

PART 2 PRODUCTS (Not Applicable)

PART 3 EXECUTION (Not Applicable)

* * * * * *

EXAMPLE

STATE OF MISSOURI

PROJECT EXEMPTION CERTIFICATE FOR EXEMPT ENTITY CONSTRUCTION

UNITED STATES OF AMERICA

NAME OF EXEMPT ENTITY _____

ADDRESS _____

CITY _____ STATE _____ ZIP _____

TAX IDENTIFICATION NUMBER (None required)

PROJECT IDENTIFICATION NUMBER _____

PLEASE PROVIDE THE PROJECT LOCATION AND A BRIEF DESCRIPTION BELOW:

CONTRACT DATE _____

CERTIFICATE EXPIRATION DATE _____

Contractors are required to provide a copy of this project exemption certificate to their vendors.

This project exemption certificate does not allow contractors to purchase machinery, equipment, or tools used in fulfilling this contract, tax exempt.

Suppliers accepting this project exemption certificate are required to render to the contractor invoices bearing the name of the exempt entity and the project identification number.

An exempt entity that fails to revise the expiration date on this certificate as necessary to complete any work required by the contract will be liable for any sales tax determined due as a result of an audit of the contractor.

The Contractor shall provide this project exemption to all subcontractors purchasing construction materials for this project.

SIGNATURE OF AUTHORIZED AGENT

EXHIBIT A

-- End of Section --

SECTION 01270A

MEASUREMENT AND PAYMENT
02/94

PART 1 GENERAL

1.1 REFERENCES

The publications listed below form a part of this specification to the extent referenced. The publications are referred to in the text by basic designation only.

AMERICAN SOCIETY FOR TESTING AND MATERIALS (ASTM)

ASTM A 615/A 615M	(1996a) Deformed and Plain Billet-Steel Bars for Concrete Reinforcement
ASTM C 127	(1988; R 1993) Specific Gravity and Absorption of Course Aggregate
ASTM C 128	(1997) Specific Gravity and Absorption of Fine Aggregate
ASTM D 1250	(1980; R 1997) Petroleum Measurement Tables

1.2 SUBMITTALS

Government approval is required for submittals with a "G" designation; submittals not having a "G" designation are for information only. When used, a designation following the "G" designation identifies the office that will review the submittal for the Government. The following shall be submitted in accordance with Section 01330 SUBMITTAL PROCEDURES:

SD-03 Product Data

Weight Certificates; G, RE

Submit certified weight certificates for Riprap, Type X.

Submit certified weight certificates for Quarry-Run Rock.

Submit certified weight certificates for Prospect Avenue - Asphalt Paving.

1.3 LUMP SUM PAYMENT ITEMS

Payment items for the work of this contract for which contract lump sum payments will be made are listed in the BIDDING SCHEDULE. All costs for items of work, which are not specifically mentioned to be included in a particular lump sum or unit price payment item, shall be included in the listed lump sum item most closely associated with the work involved. The

lump sum price and payment made for each item listed shall constitute full compensation for furnishing all plant, labor, materials, and equipment, and performing any associated Contractor quality control, environmental protection, meeting safety requirements, tests and reports, and for performing all work required for which separate payment is not otherwise provided.

1.4 UNIT PRICE PAYMENT ITEMS

Payment items for the work of this contract on which the contract unit price payments will be made are listed in the BIDDING SCHEDULE. The unit price and payment made for each item listed shall constitute full compensation for furnishing all plant, labor, materials, and equipment, and performing any associated Contractor quality control, environmental protection, meeting safety requirements, tests and reports, and for performing all work required for each of the unit price items.

1.4.1 Excavation

1.4.1.1 Payment

Payment will be made for costs associated with excavation for, which includes performing required excavation and other operations incidental thereto, Contractor-furnished disposal area(s) and disposition of excess excavated material and unsuitable and frozen materials.

1.4.1.2 Measurement

The total quantity of excavated material for which payment will be made will be the theoretical quantity between the ground surface as determined by a survey and the grade and slope of the theoretical cross sections indicated. No allowance will be made for overdepth excavation or for the removal of any material outside the required slope lines unless authorized.

1.4.1.3 Unit of Measure

Unit of measure: cubic yard.

1.4.2 R 200 Riprap, Type X

1.4.2.1 Payment

Payment will be made for costs associated with furnishing, transporting, stockpiling (if applicable), placing, and constructing the stone protection as specified.

1.4.2.2 Measurement

Riprap will be measured for payment by the ton (2,000 pounds) by weighing each truckload to the nearest 0.1 ton, and the final quantity of the whole sum will be rounded to the nearest whole ton. The riprap will be measured for payment by being weighed on approved scales before being placed in the work. Quarry weights will not be accepted. Scales shall be of sufficient

length to permit simultaneous weighing all axle loads and shall be inspected, tested and sealed as directed to assure accuracy with 0.5 percent throughout the range of the scales. The scales, located at the site of the work, shall be certified as to accuracy by an acceptable scales company representative prior to weighing any riprap. Scales will be checked and certified before riprap hauling and rechecked and recertified whenever a variance is suspected. The Contractor shall furnish the scales. If commercial scales are readily available in close proximity 10 miles of site of work, the Contracting Officer may approve the use of the scales. The riprap shall be weighed in the presence of the Government representative. The Contracting Officer may elect to accept certified weight certificates furnished by a public weighmaster in lieu of scale weights at the jobsite.

1.4.2.3 Unit of Measure

Unit of measure: ton (2,000 pounds).

1.4.3 R 200 Quarry-Run Rock

1.4.3.1 Payment

Payment will be made for costs associated with furnishing, transporting, stockpiling (if applicable), placing, and constructing the Quarry-Run Rock as specified.

1.4.3.2 Measurement

Quarry Run Rock will be measured for payment by the ton (2,000 pounds) by weighing each truckload to the nearest 0.1 ton, and the final quantity of the whole sum will be rounded to the nearest whole ton. The Quarry Run Rock will be measured for payment by being weighed on approved scales before being placed in the work. Quarry weights will not be accepted. Scales shall be of sufficient length to permit simultaneous weighing all axle loads and shall be inspected, tested and sealed as directed to assure accuracy with 0.5 percent throughout the range of the scales. The scales, located at the site of the work, shall be certified as to accuracy by an acceptable scales company representative prior to weighing any Quarry Run Rock. Scales will be checked and certified before Quarry Run Rock hauling and rechecked and recertified whenever a variance is suspected. The Contractor shall furnish the scales. If commercial scales are readily available in close proximity 10 miles of site of work, the Contracting Officer may approve the use of the scales. The Quarry Run Rock shall be weighed in the presence of the Government representative. The Contracting Officer may elect to accept certified weight certificates furnished by a public weighmaster in lieu of scale weights at the jobsite.

1.4.3.3 Unit of Measure

Unit of measure: ton (2,000 pounds).

1.4.4 R 200 Prospect Avenue - Asphalt Paving

1.4.4.1 Payment

Payment will be made for costs associated with furnishing, transporting, stockpiling (if applicable), placing, and constructing the Prospect Avenue - Asphalt Paving as specified.

1.4.4.2 Measurement

Prospect Avenue - Asphalt Paving will be measured for payment by the ton (2,000 pounds) by weighing each truckload to the nearest 0.1 ton, and the final quantity of the whole sum will be rounded to the nearest whole ton. The Prospect Avenue - Asphalt Paving will be measured for payment by being weighed on approved scales before being placed in the work. Quarry weights will not be accepted. Scales shall be of sufficient length to permit simultaneous weighing all axle loads and shall be inspected, tested and sealed as directed to assure accuracy with 0.5 percent throughout the range of the scales. The scales, located at the site of the work, shall be certified as to accuracy by an acceptable scales company representative prior to weighing any Prospect Avenue - Asphalt Paving. Scales will be checked and certified before Prospect Avenue - Asphalt Paving hauling and rechecked and recertified whenever a variance is suspected. The Contractor shall furnish the scales. If commercial scales are readily available in close proximity 10 miles of site of work, the Contracting Officer may approve the use of the scales. The Prospect Avenue - Asphalt Paving shall be weighed in the presence of the Government representative. The Contracting Officer may elect to accept certified weight certificates furnished by a public weighmaster in lieu of scale weights at the jobsite.

1.4.4.3 Unit of Measure

Unit of measure: ton (2,000 pounds).

PART 2 PRODUCTS (Not Applicable)

PART 3 EXECUTION (Not Applicable)

-- End of Section --

SECTION 01312

RESIDENT MANAGEMENT SYSTEM (RMS)
05/00

PART 1 GENERAL

1.1 GENERAL INFORMATION

The Government will use the Resident Management System for Windows (RMS-W) to assist in its monitoring and administration of this contract. The Contractor shall use the Government-furnished Construction Contractor Module of RMS-Windows, referred to as RMS-QC (QC for Quality Control), to record, maintain, and submit various information throughout the contract period. This joint Government-Contractor use of RMS-W and RMS-QC will facilitate electronic exchange of information and overall management of the contract. RMS-QC provides the means for the Contractor to input, track, and electronically share information with the Government in the following areas:

Administration

Finances

Quality control

Submittal Monitoring

Scheduling

Import/Export of Data

1.1.1 Correspondence and Electronic Communications

For ease and speed of communications, both Government and Contractor will, to the maximum extent feasible, exchange correspondence and other documents in electronic format. Correspondence, pay requests and other documents comprising the official contract record shall also be provided in paper format, with signatures and dates where necessary. Paper documents will govern, in the event of discrepancy with the electronic version.

1.1.2 Other Factors

Particular attention is directed to Contract Clause, "Schedules for Construction Contracts", Contract Clause, "Payments", Section 01320, "Project Schedule", Section 01330, SUBMITTAL PROCEDURES, and Section 01451, CONTRACTOR QUALITY CONTROL, which have a direct relationship to the reporting to be accomplished through RMS-QC. Also, there is no separate payment for establishing and maintaining the RMS-QC database; all costs associated therewith shall be included in the contract pricing for the work.

1.2 RMS-QC SOFTWARE

RMS-QC is a Windows-based program that can be run on a stand-alone personal computer or on a network. The Government will make available the RMS-QC software to the Contractor after award of the construction contract. Prior to the Pre-Construction Conference,t he Contractor shall be responsible to download, install and use the latest version of the RMS-QC software from the Government's RMS Internet Website. Upon specific justification and request by the Contractor, the Government can provide RMS-QC on 3-1/2" high-density diskettes or CD-ROM. Any program updates of RMS-QC will be made available to the Contractor via the Government RMS Website as they become available.

1.3 SYSTEM REQUIREMENTS

The following listed hardware and software is the minimum system configuration that the Contractor shall have to run RMS-QC:

Hardware

IBM-compatible PC with 200 MHz Pentium or higher processor
32+ MB RAM
4 GB hard drive disk space for sole use by the RMS-QC system
3-1/2 inch high-density floppy drive
Compact disk (CD) Reader
Color monitor
Laser printer compatible with HP LaserJet III or better, with minimum 4 MB installed memory
Connection to the Internet, minimum 28 BPS

Software

Microsoft (MS) Access 97 or newer version database software
MS Windows 98 or newer version operating system (MS Windows NT 4.0 or newer is recommended)
Word Processing software compatible with MS Word 97 or newer
Internet browser
The Contractor's computer system shall be protected by virus protection software that is regularly upgraded with all issued manufacturer's updates throughout the life of the contract.
Electronic mail (E-mail) compatible with MS Outlook

1.4 RELATED INFORMATION

1.4.1 RMS-QC User Guide

After contract award, the contractor shall download instructions for the installation and use of RMS-QC from the Government RMS Internet Website; the Contractor can obtain the current address from the Government. In case of justifiable difficulties, the Government will provide the Contractor with a CD-ROM containing these instructions.

1.4.2 Contractor Quality Control (CQC) Training

The use of RMS-QC will be discussed with the Contractor's QC System Manager during the mandatory CQC training class.

1.5 CONTRACT DATABASE

Prior to the pre-construction conference, the Government shall provide the Contractor with basic contract award data to use for RMS-QC. The Government will provide data updates to the Contractor as needed, generally by files attached to E-mail. These updates will generally consist of submittal reviews, correspondence status, QA comments, and other administrative and QA data.

PART 2 PRODUCTS (Not Applicable)

PART 3 EXECUTION

3.1 DATABASE MAINTENANCE

The Contractor shall establish, maintain, and update data for the contract in the RMS-QC database throughout the duration of the contract. The contractor shall establish and maintain the RMS-QC database at the Contractor's site office. Data updates to the Government shall be submitted by E-mail with file attachments, e.g., daily reports, schedule updates, payment requests. If permitted by the Contracting Officer, a data diskette or CD-ROM may be used instead of E-mail (see Paragraph DATA SUBMISSION VIA COMPUTER DISKETTE OR CD-ROM). The RMS-QC database typically shall include current data on the following items.

3.1.1 Administration

3.1.1.1 Contractor Information

The database shall contain the Contractor' name, address, telephone numbers, management staff, and other required items. Within 14 calendar days of receipt of RMS-QC software from the Government, the Contractor shall deliver contractor administrative data in electronic format via E-mail.

3.1.1.2 Subcontractor Information

The database shall contain the name, trade, address, phone numbers, and other required information for all subcontractors. A subcontractor must be listed separately for each trade to be performed. Each subcontractor/trade shall be assigned a unique Responsibility Code, provided in RMS-QC. Within 14 calendar days of receipt of RMS-QC software from the Government, the Contractor shall deliver subcontractor administrative data in electronic format via E-mail.

3.1.1.3 Correspondence

All Contractor correspondence to the Government shall be identified with serial number. Correspondence initiated by the Contractor's site office shall be prefixed with "S". Letters initiated by the Contractor's home (main) office shall be prefixed with "H". Letters shall be numbered

starting from 0001 (e.g., H-0001 or S-0001). The Government's letters to the contractor will be prefixed with "C".

3.1.1.4 Requests for Information

RMS-QC includes a means for the Contractor to enter, log, and transmit requests for information (RFI) to the Government. RFIs can be exchanged electronically using the import/export functions of RMS-QC. The Contractor shall also provide the Government with a signed, printed copy of each RFI. All RFIs form the Contractor to the Government shall have the prefix "RFI" and shall be numbered sequentially beginning with RFI-0001.

3.1.1.5 Equipment

The Contractor's RMS-QC database shall contain a current list of equipment planned for use or being used on the jobsite, including the most recent and planned equipment inspection dates.

3.1.1.6 EM 385-1-1, Corps of Engineers Safety Manual and RMS Linkage

Upon request, the Contractor can obtain a copy of the current version of the Safety Manual, EM 385-1-1, on Cd. Data on the Cd will be accessible through RMS-QC, or in stand-alone mode.

3.1.1.7 Management Reporting

RMS-QC includes a number of reports that Contractor management can use to track the status of the project. The value of these reports is reflective of the quality of the data input, and is maintained in the various sections of RMS-QC. Among these reports are: Progress Payment Request worksheet, QA/QC comments, Submittal Register Status, Three-Phase Inspection checklists.

3.1.2 Finances

3.1.2.1 Pay Activity Data

The RMS-QC database shall include a list of pay activities that the Contractor shall develop in conjunction with the construction schedule. The sum of all pay activities shall be equal to the total contract amount, including modifications. Pay activities shall be grouped by Contract Line Item Number (CLIN), and the sum of the activities shall equal the amount of each CLIN. The total of all CLINs equals the Contract Amount.

3.1.2.2 Payment Requests

All progress payment requests shall be prepared using RMS-QC. The Contractor shall complete the payment request worksheet and include it with the payment request. The work completed under the contract, measured as percent or as specific quantities, shall be updated at least monthly. After the update, the Contractor shall generate a payment request report using RMS-QC. The Contractor shall submit the payment requests with supporting data by E-mail with file attachment(s), If permitted by the Contracting Officer, a data diskette may be used instead of E-mail. A

signed paper copy of the approved payment request is also required, which shall govern in the event of discrepancy with the electronic version.

3.1.3 Quality Control

RMS-QC provides a means to track implementation of the 3-phase QC Control System, Prepare daily reports, identify and track deficiencies, document progress of work, and support other contractor QC requirements. The Contractor shall maintain this data on a daily basis. Entered data will automatically output to the RMS-QC-generated daily report. The Contractor shall provide the Government a Contractor Quality Control (CQC) Plan within the time required in Section 01451, CONTRACTOR QUALITY CONTROL. Within seven calendar days of Government acceptance, the Contractor shall submit a data diskette or CD-ROM reflecting the information contained in the accepted CQC Plan: schedule, pay activities, features of work, submittal register, QC requirements, and equipment list.

3.1.3.1 Daily Contractor Quality Control (CQC) Reports

RMS-QC includes the means to produce the Daily CQC Report. The contractor may use other formats to record basic QC data. However, the Daily CQC Report generated by RMS-QC shall be the Contractor's official report. Data form any supplemental reports by the Contractor shall be summarized and consolidated onto the RMS-QC-generated Daily CQC Report. Daily CQC Reports shall be submitted as required by Section 01451, CONTRACTOR QUALITY CONTROL. Reports shall be submitted electronically to the Government using E-mail or diskette within 24 hours after the date covered by the report. Use of either mode of submittal shall be coordinated with the Government representative. The Contractor shall also provide the Government a signed, printed copy of the daily CQC report.

3.1.3.2 Deficiency Tracking

The Contractor shall use RMS-QC to track deficiencies. Deficiencies identified by the Contractor will be numerically tracked using QC comments. The Contractor shall maintain a current log of its QC comments in the RMS-QC database. The Government will log the deficiencies it has identified using its QA comments. The Government's QA comments will be included in its export file to the Contractor. The Contractor shall regularly update the correction status of both QC and QA comments.

3.1.3.3 Three-Phase Control Meetings

The Contractor shall maintain scheduled and actual dates and times of preparatory and initial control meetings in RMS-QC.

3.1.3.4 Accident/Safety Tracking

The Government will issue safety comments, directions, or guidance whenever safety deficiencies are observed. The Government's safety comments will be included in its export file to the Contractor. The Contractor shall regularly update the correction status of the safety comments. In addition, the Contractor shall utilize RMS-QC to advise the Government of

any accidents occurring on the jobsite. This brief supplemental entry is not to be considered as a substitute for completion of mandatory reports, e.g., ENG Form 3394 and OSHA Form 200.

3.1.3.5 Features of Work

The Contractor shall include a complete list of the features of work in the RMS-QC database. A feature of work may be associated with multiple pay activities. However, each pay activity (see subparagraph "Pay Activity Data" of Paragraph "Finances") will only be linked to a single feature of work.

3.1.3.6 QC Requirements

The Contractor shall develop and maintain a complete list of QC testing, transferred and installed property, and user training requirements in RMS-QC. The Contractor shall update all data on these QC requirements as work progresses, and shall promptly provide this information to the Government via RMS-QC.

3.1.4 Submittal Management

The Government will provide the initial submittal register, ENG Form 4288, SUBMITTAL REGISTER, in electronic format. Thereafter, the Contractor shall maintain a complete list of all submittals, including completion of all data columns as described in Section 01330, SUBMITTAL PROCEDURES. Dates on which submittals are received and returned by the Government will be included in its export file to the Contractor. The Contractor shall use RMS-QC to track and transmit all submittals. ENG Form 4025, submittal transmittal form, and the submittal register update, ENG Form 4288, shall be produced using RMS-QC. RMS will be used to update, store and exchange submittal registers and transmittals, but will not be used for storage of actual submittals.

3.1.5 Schedule

The Contractor shall develop a construction schedule consisting of pay activities, in accordance with Contract Clause "Schedules for Construction Contracts", or Section 01320, PROJECT SCHEDULE, as applicable. This schedule shall be input and maintained in the RMS-QC database either manually or by using the Standard Data Exchange Format (SDEF) (see Section 01320 PROJECT SCHEDULE). The updated schedule data shall be included with each pay request submitted by the Contractor.

3.1.6 Import/Export of Data

RMS-QC includes the ability to export Contractor data to the Government and to import submittal register and other Government-provided data, and schedule data using SDEF.

3.2 IMPLEMENTATION

Contractor use of RMS-QC as described in the preceding paragraphs is mandatory. The Contractor shall ensure that sufficient resources are

available to maintain its RMS-QC database, and to provide the Government with regular database updates. RMS-QC shall be an integral part of the Contractor's management of quality control.

3.3 DATA SUBMISSION VIA COMPUTER DISKETTE OR CD-ROM

The Government-preferred method for Contractor's submission of updates, payment requests, correspondence and other data is by E-mail with file attachment(s). For locations w where this is not feasible, the Contracting Officer may permit use of computer diskettes or CD-ROM for data transfer. Data on the disks or CDs shall be exported using the RMS-QC built-in export function. If used, diskettes and CD-ROMs will be submitted in accordance with the following.

3.3.1 File Medium

The Contractor shall submit required data on 3-1/2" double-sided high-density diskettes formatted to hold 1.44 MB of data, capable of running under Microsoft Windows 95 or newer. Alternatively, CD-ROMs may be used. They shall conform to industry standards used in the United States. All data shall be provided in English.

3.3.2 Disk or CD-ROM Labels

The Contractor shall affix a permanent exterior label to each diskette and CD-ROM submitted. The label shall indicate in English, the RMS-QC file name, full contract number, project name, project location, data date, name and telephone number of person responsible for the data.

3.3.3 File Names

The Government will provide the file names to be used by the Contractor with the RMS-QC software.

3.4 MONTHLY COORDINATION MEETING

The Contractor shall update the RMS-QC database each workday. At least monthly, the Contractor shall generate and submit an export file to the Government with schedule update and progress payment request. As required in Contract Clause "Payments", at least one week prior to submittal, the Contractor shall meet with the Government representative to review the planned progress payment data submission for errors and omissions. The Contractor shall make all required corrections prior to Government acceptance of the export file and progress payment request. Payment requests accompanied by incomplete or incorrect data submittals will be returned. The Government will not process progress payments until an acceptable RMS-QC export file is received.

3.5 NOTIFICATION OF NONCOMPLIANCE

The Contracting Officer will notify the Contractor of any detected noncompliance with the requirements of this specification. The contractor shall take immediate corrective action after receipt of such notice. Such notice, when delivered to the Contractor at the work site, shall be deemed

sufficient for the propose of notification.

SECTION 01320A

PROJECT SCHEDULE
05/02

PART 1 GENERAL

1.1 REFERENCES

The publications listed below form a part of the specification to the extent referenced. The publications are referenced in the text by basic designation only.

U.S. ARMY CORPS OF ENGINEERS (USACE)

ER 1-1-11	(1995) Progress, Schedules, and Network Analysis Systems

1.2 QUALIFICATIONS

The Contractor shall designate an authorized representative who shall be responsible for the preparation of all required project schedule reports.

PART 2 PRODUCTS (Not Applicable)

PART 3 EXECUTION

3.1 GENERAL REQUIREMENTS

Pursuant to the Contract Clause, SCHEDULE FOR CONSTRUCTION CONTRACTS, a Project Schedule as described below shall be prepared. The scheduling of construction shall be the responsibility of the Contractor. Contractor management personnel shall actively participate in its development. Subcontractors and suppliers working on the project shall also contribute in developing and maintaining an accurate Project Schedule. The approved Project Schedule shall be used to measure the progress of the work, to aid in evaluating time extensions, and to provide the basis of all progress payments.

3.2 BASIS FOR PAYMENT

The schedule shall be the basis for measuring Contractor progress. Lack of an approved schedule or scheduling personnel will result in an inability of the Contracting Officer to evaluate Contractor's progress for the purposes of payment. Failure of the Contractor to provide all information, as specified below, shall result in the disapproval of the entire Project Schedule submission and the inability of the Contracting Officer to evaluate Contractor progress for payment purposes. In the case where Project Schedule revisions have been directed by the Contracting Officer and those revisions have not been included in the Project Schedule, the Contracting Officer may hold retainage up to the maximum allowed by contract, each payment period, until revisions to the Project Schedule have

been made.

3.3 PROJECT SCHEDULE

The computer software system utilized by the Contractor to produce the Project Schedule shall be capable of providing all requirements of this specification. Failure of the Contractor to meet the requirements of this specification shall result in the disapproval of the schedule. Manual methods used to produce any required information shall require approval by the Contracting Officer.

3.3.1 Use of the Critical Path Method

The Critical Path Method (CPM) of network calculation shall be used to generate the Project Schedule. The Contractor shall provide the Project Schedule in the Precedence Diagram Method (PDM).

3.3.2 Level of Detail Required

The Project Schedule shall include an appropriate level of detail. Failure to develop or update the Project Schedule or provide data to the Contracting Officer at the appropriate level of detail, as specified by the Contracting Officer, shall result in the disapproval of the schedule. The Contracting Officer will use, but is not limited to, the following conditions to determine the appropriate level of detail to be used in the Project Schedule:

3.3.2.1 Activity Durations

Contractor submissions shall follow the direction of the Contracting Officer regarding reasonable activity durations. Reasonable durations are those that allow the progress of activities to be accurately determined between payment periods (usually less than 2 percent of all non-procurement activities' Original Durations are greater than 20 days).

3.3.2.2 Procurement Activities

Tasks related to the procurement of long lead materials or equipment shall be included as separate activities in the project schedule. Long lead materials and equipment are those materials that have a procurement cycle of over 90 days. Examples of procurement process activities include, but are not limited to: submittals, approvals, procurement, fabrication, and delivery.

3.3.2.3 Critical Activities

The following activities shall be listed as separate line activities on the Contractor's project schedule:

a. Submission and approval of mechanical/electrical layout drawings.

b. Submission and approval of O & M manuals.

c. Submission and approval of as-built drawings.

d. Submission and approval of 1354 data and installed equipment lists.

e. Submission and approval of testing and air balance (TAB).

f. Submission of TAB specialist design review report.

g. Submission and approval of fire protection specialist.

h. Submission and approval of testing and balancing of HVAC plus commissioning plans and data.

i. Air and water balance dates.

j. HVAC commissioning dates.

k. Controls testing plan.

l. Controls testing.

m. Performance Verification testing.

n. Other systems testing, if required.

o. Prefinal inspection.

p. Correction of punchlist from prefinal inspection.

q. Final inspection.

3.3.2.4 Government Activities

Government and other agency activities that could impact progress shall be shown. These activities include, but are not limited to: approvals, inspections, utility tie-in, Government Furnished Equipment (GFE) and Notice to Proceed (NTP) for phasing requirements.

3.3.2.5 Responsibility

All activities shall be identified in the project schedule by the party responsible to perform the work. Responsibility includes, but is not limited to, the subcontracting firm, contractor work force, or government agency performing a given task. Activities shall not belong to more than one responsible party. The responsible party for each activity shall be identified by the Responsibility Code.

3.3.2.6 Work Areas

All activities shall be identified in the project schedule by the work area in which the activity occurs. Activities shall not be allowed to cover more than one work area. The work area of each activity shall be identified by the Work Area Code.

3.3.2.7 Modification or Claim Number

Any activity that is added or changed by contract modification or used to justify claimed time shall be identified by a mod or claim code that changed the activity. Activities shall not belong to more than one modification or claim item. The modification or claim number of each activity shall be identified by the Mod or Claim Number. Whenever possible, changes shall be added to the schedule by adding new activities. Existing activities shall not normally be changed to reflect modifications.

3.3.2.8 Bid Item

All activities shall be identified in the project schedule by the Bid Item to which the activity belongs. An activity shall not contain work in more than one bid item. The bid item for each appropriate activity shall be identified by the Bid Item Code.

3.3.2.9 Phase of Work

All activities shall be identified in the project schedule by the phases of work in which the activity occurs. Activities shall not contain work in more than one phase of work. The project phase of each activity shall be by the unique Phase of Work Code.

3.3.2.10 Category of Work

All Activities shall be identified in the project schedule according to the category of work which best describes the activity. Category of work refers, but is not limited, to the procurement chain of activities including such items as submittals approvals, procurement, fabrication, delivery, installation, start-up, and testing. The category of work for each activity shall be identified by the Category of Work Code.

3.3.2.11 Feature of Work

All activities shall be identified in the project schedule according to the feature of work to which the activity belongs. Feature of work refers, but is not limited to, a work breakdown structure for the project. The feature of work for each activity shall be identified by the Feature of Work Code.

3.3.3 Scheduled Project Completion

The schedule interval shall extend from NTP to the contract completion date.

3.3.3.1 Project Start Date

The schedule shall start no earlier than the date on which the NTP was acknowledged. The Contractor shall include as the first activity in the project schedule an activity called "Start Project". The "Start Project" activity shall have an "ES" constraint date equal to the date that the NTP was acknowledged, and a zero day duration.

3.3.3.2 Constraint of Last Activity

Completion of the last activity in the schedule shall be constrained by the

contract completion date. Calculation on project updates shall be such that if the early finish of the last activity falls after the contract completion date, then the float calculation shall reflect a negative float on the critical path. The Contractor shall include as the last activity in the project schedule an activity called "End Project". The "End Project" activity shall have an "LF" constraint date equal to the completion date for the project, and a zero day duration.

3.3.3.3 Early Project Completion

In the event the project schedule shows completion of the project prior to the contract completion date, the Contractor shall identify those activities that have been accelerated and/or those activities that are scheduled in parallel to support the Contractor's "early" completion. Contractor shall specifically address each of the activities noted in the narrative report at every project schedule update period to assist the Contracting Officer in evaluating the Contractor's ability to actually complete prior to the contract period.

3.3.4 Interim Completion Dates

Contractually specified interim completion dates shall also be constrained to show negative float if the early finish date of the last activity in that phase falls after the interim completion date.

3.3.4.1 Start Phase

The Contractor shall include as the first activity for a project phase an activity called "Start Phase X" where "X" refers to the phase of work. The "Start Phase X" activity shall have an "ES" constraint date equal to the date on which the NTP was acknowledged, and a zero day duration.

3.3.4.2 End Phase

The Contractor shall include as the last activity in a project phase an activity called "End Phase X" where "X" refers to the phase of work. The "End Phase X" activity shall have an "LF" constraint date equal to the completion date for the project, and a zero day duration.

3.3.4.3 Phase X

The Contractor shall include a hammock type activity for each project phase called "Phase X" where "X" refers to the phase of work. The "Phase X" activity shall be logically tied to the earliest and latest activities in the phase.

3.3.5 Default Progress Data Disallowed

Actual Start and Finish dates shall not be automatically updated by default mechanisms that may be included in CPM scheduling software systems. Actual Start and Finish dates on the CPM schedule shall match those dates provided from Contractor Quality Control Reports. Failure of the Contractor to document the Actual Start and Finish dates on the Daily Quality Control report for every in-progress or completed activity, and failure to ensure

that the data contained on the Daily Quality Control reports is the sole basis for schedule updating shall result in the disapproval of the Contractor's schedule and the inability of the Contracting Officer to evaluate Contractor progress for payment purposes. Updating of the percent complete and the remaining duration of any activity shall be independent functions. Program features which calculate one of these parameters from the other shall be disabled.

3.3.6 Out-of-Sequence Progress

Activities that have posted progress without all preceding logic being satisfied (Out-of-Sequence Progress) will be allowed only on a case-by-case approval of the Contracting Officer. The Contractor shall propose logic corrections to eliminate all out of sequence progress or justify not changing the sequencing for approval prior to submitting an updated project schedule.

3.3.7 Negative Lags

Lag durations contained in the project schedule shall not have a negative value.

3.4 PROJECT SCHEDULE SUBMISSIONS

The Contractor shall provide the submissions as described below. The data disk, reports, and network diagrams required for each submission are contained in paragraph SUBMISSION REQUIREMENTS.

3.4.1 Preliminary Project Schedule Submission

The Preliminary Project Schedule, defining the Contractor's planned operations for the first 60 calendar days shall be submitted for approval within 20 calendar days after the NTP is acknowledged. The approved preliminary schedule shall be used for payment purposes not to exceed 60 calendar days after NTP.

3.4.2 Initial Project Schedule Submission

The Initial Project Schedule shall be submitted for approval within 40 calendar days after NTP. The schedule shall provide a reasonable sequence of activities which represent work through the entire project and shall be at a reasonable level of detail.

3.4.3 Periodic Schedule Updates

Based on the result of progress meetings, specified in "Periodic Progress Meetings," the Contractor shall submit periodic schedule updates. These submissions shall enable the Contracting Officer to assess Contractor's progress. If the Contractor fails or refuses to furnish the information and project schedule data, which in the judgement of the Contracting Officer or authorized representative is necessary for verifying the Contractor's progress, the Contractor shall be deemed not to have provided an estimate upon which progress payment may be made.

3.4.4 Standard Activity Coding Dictionary

The Contractor shall use the activity coding structure defined in the Standard Data Exchange Format (SDEF) in ER 1-1-11, Appendix A. This exact structure is mandatory, even if some fields are not used.

3.5 SUBMISSION REQUIREMENTS

The following items shall be submitted by the Contractor for the preliminary submission, initial submission, and every periodic project schedule update throughout the life of the project:

3.5.1 Data Disks

Two data disks containing the project schedule shall be provided. Data on the disks shall adhere to the SDEF format specified in ER 1-1-11, Appendix A.

3.5.1.1 File Medium

Required data shall be submitted on 3.5 disks, formatted to hold 1.44 MB of data, under the MS-DOS Version 5. or 6.x, unless otherwise approved by the Contracting Officer.

3.5.1.2 Disk Label

A permanent exterior label shall be affixed to each disk submitted. The label shall indicate the type of schedule (Preliminary, Initial, Update, or Change), full contract number, project name, project location, data date, name and telephone number or person responsible for the schedule, and the MS-DOS version used to format the disk.

3.5.1.3 File Name

Each file submitted shall have a name related to either the schedule data date, project name, or contract number. The Contractor shall develop a naming convention that will ensure that the names of the files submitted are unique. The Contractor shall submit the file naming convention to the Contracting Officer for approval.

3.5.2 Narrative Report

A Narrative Report shall be provided with the preliminary, initial, and each update of the project schedule. This report shall be provided as the basis of the Contractor's progress payment request. The Narrative Report shall include: a description of activities along the 2 most critical paths, a description of current and anticipated problem areas or delaying factors and their impact, and an explanation of corrective actions taken or required to be taken. The narrative report is expected to relay to the Government, the Contractor's thorough analysis of the schedule output and its plans to compensate for any problems, either current or potential, which are revealed through that analysis.

3.5.3 Approved Changes Verification

Only project schedule changes that have been previously approved by the Contracting Officer shall be included in the schedule submission. The Narrative Report shall specifically reference, on an activity by activity basis, all changes made since the previous period and relate each change to documented, approved schedule changes.

3.5.4 Schedule Reports

The format for each activity for the schedule reports listed below shall contain: Activity Numbers, Activity Description, Original Duration, Remaining Duration, Early Start Date, Early Finish Date, Late Start Date, Late Finish Date, Total Float. Actual Start and Actual Finish Dates shall be printed for those activities in progress or completed.

3.5.4.1 Activity Report

A list of all activities sorted according to activity number.

3.5.4.2 Logic Report

A list of Preceding and Succeeding activities for every activity in ascending order by activity number. Preceeding and succeeding activities shall include all information listed above in paragraph Schedule Reports. A blank line shall be left between each activity grouping.

3.5.4.3 Total Float Report

A list of all incomplete activities sorted in ascending order of total float. Activities which have the same amount of total float shall be listed in ascending order of Early Start Dates. Completed activities shall not be shown on this report.

3.5.4.4 Earnings Report

A compilation of the Contractor's Total Earnings on the project from the NTP until the most recent Monthly Progress Meeting. This report shall reflect the Earnings of specific activities based on the agreements made in the field and approved between the Contractor and Contracting Officer at the most recent Monthly Progress Meeting. Provided that the Contractor has provided a complete schedule update, this report shall serve as the basis of determining Contractor Payment. Activities shall be grouped by bid item and sorted by activity numbers. This report shall: sum all activities in a bid item and provide a bid item percent; and complete and sum all bid items to provide a total project percent complete. The printed report shall contain, for each activity: the Activity Number, Activity Description, Original Budgeted Amount, Total Quantity, Quantity to Date, Percent Complete (based on cost), and Earnings to Date.

3.5.5 Network Diagram

The network diagram shall be required on the initial schedule submission and on monthly schedule update submissions. The network diagram shall depict and display the order and interdependence of activities and the

sequence in which the work is to be accomplished. The Contracting Officer will use, but is not limited to, the following conditions to review compliance with this paragraph:

3.5.5.1 Continuous Flow

Diagrams shall show a continuous flow from left to right with no arrows from right to left. The activity number, description, duration, and estimated earned value shall be shown on the diagram.

3.5.5.2 Project Milestone Dates

Dates shall be shown on the diagram for start of project, any contract required interim completion dates, and contract completion dates.

3.5.5.3 Critical Path

The critical path shall be clearly shown.

3.5.5.4 Banding

Activities shall be grouped to assist in the understanding of the activity sequence. Typically, this flow will group activities by category of work, work area and/or responsibility.

3.5.5.5 S-Curves

Earnings curves showing projected early and late earnings and earnings to date.

3.6 PERIODIC PROGRESS MEETINGS

Progress meetings to discuss payment shall include a monthly onsite meeting or other regular intervals mutually agreed to at the preconstruction conference. During this meeting the Contractor shall describe, on an activity by activity basis, all proposed revisions and adjustments to the project schedule required to reflect the current status of the project. The Contracting Officer will approve activity progress, proposed revisions, and adjustments as appropriate.

3.6.1 Meeting Attendance

The Contractor's Project Manager and Scheduler shall attend the regular progress meeting.

3.6.2 Update Submission Following Progress Meeting

A complete update of the project schedule containing all approved progress, revisions, and adjustments, based on the regular progress meeting, shall be submitted not later than 4 working days after the monthly progress meeting.

3.6.3 Progress Meeting Contents

Update information, including Actual Start Dates, Actual Finish Dates,

Remaining Durations, and Cost-to-Date shall be subject to the approval of the Contracting Officer. As a minimum, the Contractor shall address the following items on an activity by activity basis during each progress meeting.

3.6.3.1 Start and Finish Dates

The Actual Start and Actual Finish dates for each activity currently in-progress or completed .

3.6.3.2 Time Completion

The estimated Remaining Duration for each activity in-progress. Time-based progress calculations shall be based on Remaining Duration for each activity.

3.6.3.3 Cost Completion

The earnings for each activity started. Payment will be based on earnings for each in-progress or completed activity. Payment for individual activities will not be made for work that contains quality defects. A portion of the overall project amount may be retained based on delays of activities.

3.6.3.4 Logic Changes

All logic changes pertaining to NTP on change orders, change orders to be incorporated into the schedule, contractor proposed changes in work sequence, corrections to schedule logic for out-of-sequence progress, lag durations, and other changes that have been made pursuant to contract provisions shall be specifically identified and discussed.

3.6.3.5 Other Changes

Other changes required due to delays in completion of any activity or group of activities include: 1) delays beyond the Contractor's control, such as strikes and unusual weather. 2) delays encountered due to submittals, Government Activities, deliveries or work stoppages which make re-planning the work necessary. 3) Changes required to correct a schedule which does not represent the actual or planned prosecution and progress of the work.

3.7 REQUESTS FOR TIME EXTENSIONS

In the event the Contractor requests an extension of the contract completion date, or any interim milestone date, the Contractor shall furnish the following for a determination as to whether or not the Contractor is entitled to an extension of time under the provisions of the contract: justification, project schedule data, and supporting evidence as the Contracting Officer may deem necessary. Submission of proof of delay, based on revised activity logic, duration, and costs (updated to the specific date that the delay occurred) is obligatory to any approvals.

3.7.1 Justification of Delay

The project schedule shall clearly display that the Contractor has used, in full, all the float time available for the work involved with this request. The Contracting Officer's determination as to the number of allowable days of contract extension shall be based upon the project schedule updates in effect for the time period in question, and other factual information. Actual delays that are found to be caused by the Contractor's own actions, which result in the extension of the schedule, will not be a cause for a time extension to the contract completion date.

3.7.2 Submission Requirements

The Contractor shall submit a justification for each request for a change in the contract completion date of under 2 weeks based upon the most recent schedule update at the time of the NTP or constructive direction issued for the change. Such a request shall be in accordance with the requirements of other appropriate Contract Clauses and shall include, as a minimum:

a. A list of affected activities, with their associated project schedule activity number.

b. A brief explanation of the causes of the change.

c. An analysis of the overall impact of the changes proposed.

d. A sub-network of the affected area.

Activities impacted in each justification for change shall be identified by a unique activity code contained in the required data file.

3.7.3 Additional Submission Requirements

For any requested time extension of over 2 weeks, the Contracting Officer may request an interim update with revised activities for a specific change request. The Contractor shall provide this disk within 4 days of the Contracting Officer's request.

3.8 DIRECTED CHANGES

If the NTP is issued for changes prior to settlement of price and/or time, the Contractor shall submit proposed schedule revisions to the Contracting Officer within 2 weeks of the NTP being issued. The proposed revisions to the schedule will be approved by the Contracting Officer prior to inclusion of those changes within the project schedule. If the Contractor fails to submit the proposed revisions, the Contracting Officer may furnish the Contractor with suggested revisions to the project schedule. The Contractor shall include these revisions in the project schedule until revisions are submitted, and final changes and impacts have been negotiated. If the Contractor has any objections to the revisions furnished by the Contracting Officer, the Contractor shall advise the Contracting Officer within 2 weeks of receipt of the revisions. Regardless of the objections, the Contractor shall continue to update the schedule with the Contracting Officer's revisions until a mutual agreement in the revisions is reached. If the Contractor fails to submit alternative revisions within 2 weeks of receipt of the Contracting Officer's proposed

revisions, the Contractor will be deemed to have concurred with the Contracting Officer's proposed revisions. The proposed revisions will then be the basis for an equitable adjustment for performance of the work.

3.9 OWNERSHIP OF FLOAT

Float available in the schedule, at any time, shall not be considered for the exclusive use of either the Government or the Contractor.

-- End of Section --

SECTION 01330

SUBMITTAL PROCEDURES
09/97

PART 1 GENERAL

1.1 SUBMITTAL IDENTIFICATION

Submittals required are identified by SD numbers as follows:

SD-01 Data

SD-04 Drawings

SD-06 Instructions

SD-07 Schedules

SD-08 Statements

SD-09 Reports

SD-13 Certificates

SD-14 Samples

SD-18 Records

SD-19 Operation and Maintenance Manuals

1.2 SUBMITTAL CLASSIFICATION

Submittals are classified as follows:

1.2.1 Government Approved

Governmental approval is required for extensions of design, critical materials, deviations, equipment whose compatibility with the entire system must be checked, and other items as designated by the Contracting Officer. Within the terms of the Contract Clause entitled "Specifications and Drawings for Construction," they are considered to be "shop drawings."

1.2.2 Information Only

All submittals not requiring Government approval will be for information only. They are not considered to be "shop drawings" within the terms of the Contract Clause referred to above.

1.3 APPROVED SUBMITTALS

The Contracting Officer's approval of submittals shall not be construed as a complete check, but will indicate only that the general method of construction, materials, detailing and other information are satisfactory. Approval will not relieve the Contractor of the responsibility for any error which may exist, as the Contractor under the Contractor Quality Control (CQC) requirements of this contract is responsible for dimensions, the design of adequate connections and details, and the satisfactory construction of all work. After submittals have been approved by the Contracting Officer, no resubmittal for the purpose of substituting materials or equipment will be considered unless accompanied by an explanation of why a substitution is necessary.

1.4 DISAPPROVED SUBMITTALS

The Contractor shall make all corrections required by the Contracting Officer and promptly furnish a corrected submittal in the form and number of copies specified for the initial submittal. If the Contractor considers any correction indicated on the submittals to constitute a change to the contract, a notice in accordance with the Contract Clause "Changes" shall be given promptly to the Contracting Officer.

1.5 WITHHOLDING OF PAYMENT

Payment for materials incorporated in the work will not be made if required approvals have not been obtained.

PART 2 PRODUCTS (Not Applicable)

PART 3 EXECUTION

3.1 GENERAL

The Contractor shall make submittals as required by the specifications. The Contracting Officer may request submittals in addition to those specified when deemed necessary to adequately describe the work covered in the respective sections. Units of weights and measures used on all submittals shall be the same as those used in the contract drawings. Each submittal shall be complete and in sufficient detail to allow ready determination of compliance with contract requirements. Prior to submittal, all items shall be checked and approved by the Contractor's Quality Control (CQC) System Manager and each item shall be stamped, signed, and dated by the CQC System Manager indicating action taken. Proposed deviations from the contract requirements shall be clearly identified. Submittals shall include items such as: Contractor's, manufacturer's, or fabricator's drawings; descriptive literature including (but not limited to) catalog cuts, diagrams, operating charts or curves; test reports; test cylinders; samples; O&M manuals (including parts list); certifications; warranties; and other such required submittals. Submittals requiring Government approval shall be scheduled and made prior to the acquisition of the material or equipment covered thereby. Samples remaining upon completion of the work shall be picked up and disposed of in accordance with manufacturer's Material Safety Data Sheets (MSDS) and in compliance with existing laws and regulations.

3.2 SUBMITTAL REGISTER (ENG FORM 4288)

At the end of this section is one set of ENG Form 4288 listing items of equipment and materials for which submittals are required by the specifications; this list may not be all inclusive and additional submittals may be required. The Contractor shall maintain the submittal register in accordance with Section 01312 RESIDENT MANAGEMENT SYSTEM (RMS).

3.3 SCHEDULING

Submittals covering component items forming a system or items that are interrelated shall be scheduled to be coordinated and submitted concurrently. Certifications to be submitted with the pertinent drawings shall be so scheduled. Adequate time (a minimum of 30 calendar days exclusive of mailing time) shall be allowed and shown on the register for review and approval. No delay damages or time extensions will be allowed for time lost in late submittals.

3.4 TRANSMITTAL FORM (ENG FORM 4025)

The sample transmittal form (ENG Form 4025) attached to this section shall be used for submitting both Government approved and information only submittals in accordance with the instructions on the reverse side of the form. These forms are included in the RMS-QC software that the Contractor is required to use for this contract. This form shall be properly completed by filling out all the heading blank spaces and identifying each item submitted. Special care shall be exercised to ensure proper listing of the specification paragraph and/or sheet number of the contract drawings pertinent to the data submitted for each item.

3.5 SUBMITTAL PROCEDURE

Submittals shall be made as follows:

3.5.1 Procedures

3.5.2 Deviations

For submittals which include proposed deviations requested by the Contractor, the column "variation" of ENG Form 4025 shall be checked. The Contractor shall set forth in writing the reason for any deviations and annotate such deviations on the submittal. The Government reserves the right to rescind inadvertent approval of submittals containing unnoted deviations.

3.6 CONTROL OF SUBMITTALS

The Contractor shall carefully control his procurement operations to ensure that each individual submittal is made on or before the Contractor scheduled submittal date shown on the approved "Submittal Register."

3.7 GOVERNMENT APPROVED SUBMITTALS

Upon completion of review of submittals requiring Government approval, the submittals will be identified as having received approval by being so stamped and dated. 4 copies of the submittal will be retained by the Contracting Officer and 2 copies of the submittal will be returned to the Contractor.

3.8 INFORMATION ONLY SUBMITTALS

Normally submittals for information only will not be returned. Approval of the Contracting Officer is not required on information only submittals. The Government reserves the right to require the Contractor to resubmit any item found not to comply with the contract. This does not relieve the Contractor from the obligation to furnish material conforming to the plans and specifications; will not prevent the Contracting Officer from requiring removal and replacement of nonconforming material incorporated in the work; and does not relieve the Contractor of the requirement to furnish samples for testing by the Government laboratory or for check testing by the Government in those instances where the technical specifications so prescribe.

3.9 STAMPS

Stamps used by the Contractor on the submittal data to certify that the submittal meets contract requirements shall be similar to the following:

CONTRACTOR

(Firm Name)

_____ Approved

_____ Approved with corrections as noted on submittal data and/or attached sheets(s).

SIGNATURE: _____

TITLE: _____

DATE: _____

-- End of Section --

TRANSMITTAL OF SHOP DRAWINGS, EQUIPMENT DATA, MATERIAL SAMPLES, OR MANUFACTURER'S CERTIFICATES OF COMPLIANCE *(Read instructions on the reverse side prior to initiating this form)*	DATE	TRANSMITTAL NO.

SECTION I - REQUEST FOR APPROVAL OF THE FOLLOWING ITEMS *(This section will be initiated by the contractor)*

TO:	FROM:	CONTRACT NO.	CHECK ONE: ☐ THIS IS A NEW TRANSMITTAL ☐ THIS IS A RESUBMITTAL OF TRANSMITTAL
SPECIFICATION SEC. NO. *(Cover only one section with each transmittal)*	PROJECT TITLE AND LOCATION		CHECK ONE: THIS TRANSMITTAL IS FOR ☐ FIO ☐ GOV'T. APPROVAL

ITEM NO. *a.*	DESCRIPTION OF ITEM SUBMITTED *(Type size, model number/etc.)* .	MFG OR CONTR. CAT., CURVE DRAWING OR BROCHURE NO. *(See instruction no. 8)* *c.*	NO. OF COPIES *d.*	CONTRACT REFERENCE DOCUMENT SPEC. PARA. NO. *e.*	DRAWING SHEET NO. *f.*	FOR CONTRACTOR USE CODE *g.*	VARIATION *(See instruction No. 6)* .	FOR CE USE CODE *i.*

REMARKS	I certify that the above submitted items have been reviewed in detail and are correct and in strict conformance with the contract drawings and specifications except as other wise stated. NAME AND SIGNATURE OF CONTRACTOR

SECTION II - APPROVAL ACTION

ENCLOSURES RETURNED *(List by Item No.)*	NAME, TITLE AND SIGNATURE OF APPROVING AUTHORITY	DATE

INSTRUCTIONS

1. Section I will be initiated by the Contractor in the required number of copies.

2. Each transmittal shall be numbered consecutively in the space provided for "Transmittal No.". This number, in addition to the contract number, will form a serial number for identifying each submittal. For new submittals or resubmittals mark the appropriate box; on resubmittals, insert transmittal number of last submission as well as the new submittal number.

3. The "Item No." will be the same "Item No." as indicated on ENG FORM 4288-R for each entry on this form.

4. Submittals requiring expeditious handling will be submitted on a separate form.

5. Separate transmittal form will be used for submittals under separate sections of the specifications.

6. A check shall be placed in the "Variation" column when a submittal is not in accordance with the plans and specifications--also, a written statement to that effect shall be included in the space provided for "Remarks".

7. Form is self-transmittal, letter of transmittal is not required.

8. When a sample of material or Manufacturer's Certificate of Compliance is transmitted, indicate "Sample" or "Certificate" in column c, Section I.

9. U.S. Army Corps of Engineers approving authority will assign action codes as indicated below in space provided in Section I, column i to each item submitted. In addition they will ensure enclosures are indicated and attached to the form prior to return to the contractor. The Contractor will assign action codes as indicated below in Section I, column g, to each item submitted.

THE FOLLOWING ACTION CODES ARE GIVEN TO ITEMS SUBMITTED

A -- Approved as submitted.

B -- Approved, except as noted on drawings.

C -- Approved, except as noted on drawings. Refer to attached sheet resubmission required.

D -- Will be returned by separate correspondence.

E -- Disapproved (See attached).

F -- Receipt acknowledged.

FX -- Receipt acknowledged, does not comply as noted with contract requirements.

G -- Other *(Specify)*

10. Approval of items does not relieve the contractor from complying with all the requirements of the contract plans and specifications.

ROUTING OF SHOP DRAWINGS, EQUIPMENT DATA, MATERIAL SAMPLES, OR MANUFACTURER'S CERTIFICATES OF COMPLIANCE FOR APPROVAL

(Used to route ENG Form 4025 with items attached. Not to become a part of the Contractor's record.)

1	TO:	FROM:	DATE

The attached items listed on ENG Form 4025 are fowarded for approval action.

CONTRACT NUMBER	CONTRACTOR
TRANSMITTAL NUMBER	PROJECT TITLE AND LOCATION

COMMENTS *(Attach additional sheet, if necessary.)*

NO. OF ENCL.	TYPED NAME AND TITLE	SIGNATURE

2	TO:	FROM:	DATE

COMMENTS *(Attach additional sheet, if necessary.)*

NO. OF ENCL.	TYPED NAME AND TITLE	SIGNATURE

3	TO:	FROM:	DATE

COMMENTS *(Attach additional sheet, if necessary.)*

NO. OF ENCL.	TYPED NAME AND TITLE	SIGNATURE

4	TO:	FROM:	DATE

The following action codes are given to items listed on ENG Form 4025.

ACTIONS CODES

A - APPROVED AS SUBMITTED.
B - APPROVED, EXCEPT AS NOTED ON DRAWINGS. RESUBMISSION NOT REQUIRED.
C - APPROVED, EXCEPT AS NOTED ON DRAWINGS.
D - WILL BE RETURNED BY SEPARATE CORRESPONDENCE.
E - DISAPPROVED *(SEE ATTACHED)*
F - RECEIPT ACKNOWLEDGED
G - OTHER *(specify)*

ACTION CODES TO BE INSERTED IN COLUMN G, SECTION I, ENG FORM 4025 *(Attach sheets, when required.)*

ITEM NO. *(Taken from ENG Form 4025)*								
CODE GIVEN								

REMARKS

NO. OF ENCL.	TYPED NAME AND TITLE	SIGNATURE

SUBMITTAL REGISTER

CONTRACT NO.

TITLE AND LOCATION
Brush Creek Prospect

CONTRACTOR

ACTIVITY NO (a)	TRANSMITTAL NO (b)	SPEC SECT (c)	DESCRIPTION ITEM SUBMITTED (d)	PARAGRAPH # (e)	CLASSIFICATION (f)	GOVT OR A/E REVWR	CONTRACTOR: SCHEDULE DATES SUBMIT (g)	APPROVAL NEEDED BY (h)	MATERIAL NEEDED BY (i)	CONTRACTOR ACTION CODE (j)	DATE OF ACTION (k)	DATE FWD TO APPR AUTH/ DATE RCD FROM CONTR (l)	APPROVING AUTHORITY DATE FWD TO OTHER REVIEWER (m)	DATE RCD FROM OTH REVIEWER (n)	ACTION CODE (o)	DATE OF ACTION (p)	MAILED TO CONTR/ DATE RCD FRM APPR AUTH (q)	REMARKS (r)
		01270A	SD-03 Product Data															
			Weight Certificates	1.4.2.2	G RE													
			Weight Certificates	1.4.3.2	G RE													
			Weight Certificates	1.4.4.2	G RE													
		01354	SD-08 Manufacturer’s Instructions															
			Retention Pond Removal Plan															
			GA															
		01356A	SD-07 Certificates															
			Mill Certificate or Affidavit	2.1.3	G RE													
			As-Built Drawings															
			GA-RE															
			As-Built Record of Equipment and															
			Materials															
			Warranty Management Plan															
			Warranty Tags															
			Final Clean-Up															
		13110A	SD-02 Shop Drawings															
			Drawings	1.3.9	G __EC													
			Contractor's Modifications	1.3.2	G __EC													
			SD-03 Product Data															
			Equipment		G __EC													
			Spare Parts	3.9														
			__G___. __RE___															
			SD-06 Test Reports															
			Tests and Measurements	3.5	G __RE													
			Contractor's Modifications	1.3.2	G __RE													

SUBMITTAL REGISTER

CONTRACT NO.

TITLE AND LOCATION
Brush Creek Prospect

CONTRACTOR

ACTIVITY NO (a)	TRANSMITTAL NO (b)	SPEC SECT (c)	DESCRIPTION ITEM SUBMITTED (d)	PARAGRAPH # (e)	CLASSIFICATION G OVT OR A/E REVWR (f)	CONTRACTOR: SCHEDULE DATES SUBMIT (g)	APPROVAL NEEDED BY (h)	MATERIAL NEEDED BY (i)	CONTRACTOR ACTION ACTION CODE (j)	DATE OF ACTION (k)	DATE FWD TO APPR AUTH/ DATE RCD FROM CONTR (l)	APPROVING AUTHORITY DATE FWD TO OTHER REVIEWER (m)	DATE RCD FROM OTH REVIEWER (n)	ACTION CODE (o)	DATE OF ACTION (p)	MAILED TO CONTR/ DATE RCD FRM APPR AUTH (q)	REMARKS (r)
		13110A	SD-07 Certificates														
			Cathodic Protection System														
			__G___, __RE___														
			Services of 'Corrosion Expert'	1.3.1	G __RE												
			SD-10 Operation and Maintenance														
			Data														
			Cathodic Protection System														
			__G___, __RE___														
			Training Course	3.6													
		16070A	SD-02 Shop Drawings														
			Lighting Fixtures in Buildings	3.2													
			[_____], [_____]														
			Equipment Requirements	1.4													
			SD-03 Product Data														
			Lighting Fixtures in Buildings	3.2	G [___												
			Equipment Requirements	1.4	G [___												
			Contractor Designed Bracing	1.3.4	G [___												
		16375	SD-01 Preconstruction Submittals														
			Manufacturer's Catalog Data		G RE												
			Material, Equipment, Lists		G RE												
			Installation Procedures		G RE												
			SD-04 Samples														
			Electrical Distribution System		G RE												
			As-Built Drawings		G RE												
			SD-09 Manufacturer’s Field														
			Reports														

SUBMITTAL REGISTER

CONTRACT NO.

TITLE AND LOCATION
Brush Creek Prospect

CONTRACTOR

ACTIVITY NO (a)	TRANSMITTAL NO (b)	SPEC SECT (c)	DESCRIPTION ITEM SUBMITTED (d)	PARAGRAPH # (e)	CLASSIFICATION (f)	GOVT OR A/E REVWR	CONTRACTOR: SCHEDULE DATES SUBMIT (g)	APPROVAL NEEDED BY (h)	MATERIAL NEEDED BY (i)	CONTRACTOR ACTION CODE (j)	DATE OF ACTION (k)	DATE FWD TO APPR AUTH/ DATE RCD FROM CONTR (l)	APPROVING AUTHORITY DATE FWD TO OTHER REVIEWER (m)	DATE RCD FROM OTH REVIEWER (n)	ACTION CODE (o)	DATE OF ACTION (p)	MAILED TO CONTR/ DATE RCD FRM APPR AUTH (q)	REMARKS (r)
		16375	Factory Test		G RE													
			Field Testing		G RE													
			Test Reports		G RE													
			Cable Installation Reports		G RE													
			Materials and Equipment	1.6	G RE													
			Cable Installer Qualifications		G RE													
			Electrical Distribution System		G RE													

SUBMITTAL REGISTER
(ER 415 1-10)

CONTRACT NO. DACW41-03-B-0003

TITLE AND LOCATION: Brush Creek Prospect Bridge

CONTRACTOR:

SPECIFICATION SECTION: 01354

ACTIVITY NO a.	TRANS-MITTAL NO. b.	ITEM NO c.	SPECIFICATION PARAGRAPH NUMBER d.	DESCRIPTION OF ITEM SUBMITTED e.	TYPE OF SUBMITTAL: DATA f.	DRAWINGS g.	INSTRUCTIONS h.	SCHEDULES i.	STATEMENTS j.	REPORTS k.	CERTIFICATES l.	SAMPLES m.	RECORDS n.	O&M MANUALS o.	CLASSIFICATION: INFORMATION ONLY p.	GOVERNMENT APPROVED q.	REVIEWER r.	CONTRACTOR SCHEDULE DATES: SUBMIT s.	APPROVAL NEEDED BY t.	MATERIAL NEEDED BY u.	CONTRACTOR ACTION: CODE v.	DATE w.	SUBMIT TO GOVERN-MENT x.	GOVERNMENT ACTION: CODE y.	DATE z.	REMARKS aa.
			01354	RETENTION POND REMOVAL PLAN					X							X										
				AS BUILT DRAINGS		X										X										
				AS BUILT - EQUIPMENT AND MATERIALS										X		X										
				WARRANTY MANAGEMENT PLAN				X	X							X										
				WARRANTY TAGS					X							X										
				FIANL CLEAN UP										X		X										
				X = ENGR/CONSTR REVIEW BLANK = RE																						

ENG FORM 4288-R, JAN EDITION OF MAR 95 IS OBSOLETE. PAGE _____ O _____ PAGES (Proponent:

SUBMITTAL REGISTER
(ER 415 1-10)

CONTRACT NO. DACW-41-03-B-0003

TITLE AND LOCATION: BRUSH CREEK PROSPECT BRIDGE

CONTRACTOR:

SPECIFICATION SECTION: 02001

ACTIVITY NO. a.	TRANS-MITTAL NO. b.	ITEM NO c.	SPECIFICATION PARAGRAPH NUMBER d.	DESCRIPTION OF ITEM SUBMITTED e.	TYPE OF SUBMITTAL: DATA f.	DRAWINGS g.	INSTRUCTIONS h.	SCHEDULES i.	STATEMENTS j.	REPORTS k.	CERTIFICATES l.	SAMPLES m.	RECORDS n.	O&M MANUALS o.	CLASSIFICATION: INFORMATION ONLY p.	GOVERNMENT APPROVED q.	REVIEWER r.	CONTRACTOR SCHEDULE DATES: SUBMIT s.	APPROVAL NEEDED BY t.	MATERIAL NEEDED BY u.	CONTRACTOR ACTION: CODE v.	DATE w.	SUBMIT TO GOVERN-MENT x.	GOVERNMENT ACTION: CODE y.	DATE z.	REMARKS aa.
			02001	GENERAL																						
			2.	PLAN OF OPERATION				X								X										
			2.1	INTERIM PLAN				X								X										
			5.1	HIGHWAY PERMIT									X		X											
			5.2	NPDES PERMIT									X		X											
			10.1	SPECIAL PRMIT (PARKS)									X		X											
				X = ENGR/CONSTR REVIEW Blank = RE																						

SUBMITTAL REGISTER
(ER 415 1-10)

CONTRACT NO. DACW41-03-B-0003

TITLE AND LOCATION: BRUSH CREEK PROSPECT BRIDGE

CONTRACTOR:

SPECIFICATION SECTION: 02200

ACTIVITY NO a.	TRANS-MITTAL NO. b.	ITEM NO c.	SPECIFICATION PARAGRAPH NUMBER d.	DESCRIPTION OF ITEM SUBMITTED e.	TYPE OF SUBMITTAL: DATA f.	DRAWINGS g.	INSTRUCTIONS h.	SCHEDULES i.	STATEMENTS j.	REPORTS k.	CERTIFICATES l.	SAMPLES m.	RECORDS n.	O&M MANUALS o.	CLASSIFICATION: INFORMATION ONLY p.	GOVERNMENT APPROVED q.	REVIEWER r.	CONTRACTOR SCHEDULE DATES: SUBMIT s.	APPROVAL NEEDED BY t.	MATERIAL NEEDED BY u.	CONTRACTOR ACTION: CODE v.	DATE w.	SUBMIT TO GOVERN-MENT x.	GOVERNMENT ACTION: CODE y.	DATE z.	REMARKS aa.
			02200	ASPHALT PAVING																						
			2205.2	SAMPLES								X				X										
			2205.3J.2	MIX DESIGN						X						X										
			2205.4.B	QUALITY CONTROL PLAN						X						X										
				X = ENGR/CONSTR REVIEW BLANK = RE																						

SUBMITTAL REGISTER
(ER 415 1-10)

CONTRACT NO. DACW-41-03-B0003

TITLE AND LOCATION: BRUSH CREEK PROSPECT BRIDGE

CONTRACTOR:

SPECIFICATION SECTION: 02201

ACTIVITY NO. a.	TRANS-MITTAL NO. b.	ITEM NO c.	SPECIFICATION PARAGRAPH NUMBER d.	DESCRIPTION OF ITEM SUBMITTED e.	TYPE OF SUBMITTAL: DATA f.	DRAWINGS g.	INSTRUCTIONS h.	SCHEDULES i.	STATEMENTS j.	REPORTS k.	CERTIFICATES l.	SAMPLES m.	RECORDS n.	O&M MANUALS o.	CLASSIFICATION: INFORMATION ONLY p.	GOVERNMENT APPROVED q.	REVIEWER r.	CONTRACTOR SCHEDULE DATES: SUBMIT s.	APPROVAL NEEDED BY t.	MATERIAL NEEDED BY u.	CONTRACTOR ACTION: CODE v.	DATE w.	SUBMIT TO GOVERN-MENT x.	GOVERNMENT ACTION: CODE y.	DATE z.	REMARKS aa.
			02201	EARTHWORK																						
			A. 3 (a)	EXCAVATION PLAN						X					X											
			D. 2.	SHORING PLAN	X	X										X	X									
				X = ENGR/CONSTR REVIEW BLANK = RE																						

SUBMITTAL REGISTER
(ER 415 1-10)

CONTRACT NO. DACW41-03-B-0003

TITLE AND LOCATION: BRUSH CREEK PROSPECT BRIDGE

CONTRACTOR:

SPECIFICATION SECTION: 02205

ACTIVITY NO. a.	TRANS-MITTAL NO. b.	ITEM NO c.	SPECIFICATION PARAGRAPH NUMBER d.	DESCRIPTION OF ITEM SUBMITTED e.	TYPE OF SUBMITTAL: DATA f.	DRAWINGS g.	INSTRUCTIONS h.	SCHEDULES i.	STATEMENTS j.	REPORTS k.	CERTIFICATES l.	SAMPLES m.	RECORDS n.	O&M MANUALS o.	CLASSIFICATION: INFORMATION ONLY p.	GOVERNMENT APPROVED q.	REVIEWER r.	CONTRACTOR SCHEDULE DATES: SUBMIT s.	APPROVAL NEEDED BY t.	MATERIAL NEEDED BY u.	CONTRACTOR ACTION: CODE v.	DATE w.	SUBMIT TO GOVERN-MENT x.	GOVERNMENT ACTION: CODE y.	DATE z.	REMARKS aa.
			02205	FILTER FABRIC																						
			B. 1. (c)	CERTIFICATE							X				X											
				X = ENGR/CONSTR REVIEW BLANK = RE																						

ENG FORM 4288-R, JAN EDITION OF MAR 95 IS OBSOLETE. PAGE _____ O _____ PAGES (Proponent:

SUBMITTAL REGISTER
(ER 415 1-10)

CONTRACT NO. DACW41-03-B-0003

TITLE AND LOCATION: BRUSH CREEK PROSPECT BRIDGE

CONTRACTOR:

SPECIFICATION SECTION: 02225

ACTIVITY NO a.	TRANS-MITTAL NO. b.	ITEM NO c.	SPECIFICATION PARAGRAPH NUMBER d.	DESCRIPTION OF ITEM SUBMITTED e.	TYPE OF SUBMITTAL: DATA f.	DRAWINGS g.	INSTRUCTIONS h.	SCHEDULES i.	STATEMENTS j.	REPORTS k.	CERTIFICATES l.	SAMPLES m.	RECORDS n.	O&M MANUALS o.	CLASSIFICATION: INFORMATION ONLY p.	GOVERNMENT APPROVED q.	REVIEWER r.	CONTRACTOR SCHEDULE DATES: SUBMIT s.	APPROVAL NEEDED BY t.	MATERIAL NEEDED BY u.	CONTRACTOR ACTION: CODE v.	DATE w.	SUBMIT TO GOVERN-MENT x.	GOVERNMENT ACTION: CODE y.	DATE z.	REMARKS aa.
			02225	CHANNEL OVERLAY STONE																						
			A. 2.	METHODS	X											X	X									
			A. 3.	PLAN OF OPERATIONS	X											X	X									
				X = ENGR/CONSTR REVIEW BLANK = RE																						

ENG FORM 4288-R, JAN EDITION OF MAR 95 IS OBSOLETE. PAGE _____ O _____ PAGES (Proponent:

SUBMITTAL REGISTER
(ER 415 1-10)

CONTRACT NO. DACW41-03-B-0003

TITLE AND LOCATION: BRUSH CREEK PROSPECT BRIDGE

CONTRACTOR:

SPECIFICATION SECTION: 02246

ACTIVITY NO a.	TRANS-MITTAL NO. b.	ITEM NO c.	SPECIFICATION PARAGRAPH NUMBER d.	DESCRIPTION OF ITEM SUBMITTED e.	TYPE OF SUBMITTAL: DATA f.	DRAWINGS g.	INSTRUCTIONS h.	SCHEDULES i.	STATEMENTS j.	REPORTS k.	CERTIFICATES l.	SAMPLES m.	RECORDS n.	O&M MANUALS o.	CLASSIFICATION: INFORMATION ONLY p.	GOVERNMENT APPROVED q.	REVIEWER r.	CONTRACTOR SCHEDULE DATES: SUBMIT s.	APPROVAL NEEDED BY t.	MATERIAL NEEDED BY u.	CONTRACTOR ACTION: CODE v.	DATE w.	SUBMIT TO GOVERN-MENT x.	GOVERNMENT ACTION: CODE y.	DATE z.	REMARKS aa.
			02246	GEOSYNTHETIC WALL REINFORCEMENT																						
			A. 4	MANUFACTURER'S CERTIFICATE							X				X											
				X = ENGR/CONSTR REVIEW BLANK = RE																						

ENG FORM 4288-R, JAN EDITION OF MAR 95 IS OBSOLETE. PAGE _____ O _____ PAGES (Proponent:

SUBMITTAL REGISTER
(ER 415-1-10)

CONTRACT NO.
DACAW-41

AND LOCATION
h Creek Prospect Bridge

CONTRACTOR

SPECIFICATION
02270

TRANSMITTAL NO. b	ITEM NO. c	SPECIFICATION PARAGRAPH NUMBER d	DESCRIPTION OF ITEM SUBMITTED e	TYPE OF SUBMITTAL: DATA f	DRAWINGS g	INSTRUCTIONS h	SCHEDULES i	STATEMENTS j	REPORTS k	CERTIFICATES l	SAMPLES m	RECORDS n	O&M MANUALS o	CLASSIFICATION: INFORMATION ONLY p	GOVERNMENT q	REVIEWER r	CONTRACTOR SCHEDULE DATES: SUBMIT s	APPROVAL NEEDED BY t	MATERIAL NEEDED BY u	CONTRACTOR ACTION: CODE v	DATE w	SUBMIT TO GOVERNMENT x	GOVERNMENT ACTION: CODE y	DATE z
		8	erosion control plan		X										X									

SUBMITTAL REGISTER
(ER 415 1-10)

CONTRACT NO. DACW41-03-B-0003

TITLE AND LOCATION: BRUSH CREEK PROSPECT BRIDGE

CONTRACTOR:

SPECIFICATION SECTION: 02276

ACTIVITY NO a.	TRANS-MITTAL NO. b.	ITEM NO c.	SPECIFICATION PARAGRAPH NUMBER d.	DESCRIPTION OF ITEM SUBMITTED e.	TYPE OF SUBMITTAL: DATA f.	DRAWINGS g.	INSTRUCTIONS h.	SCHEDULES i.	STATEMENTS j.	REPORTS k.	CERTIFICATES l.	SAMPLES m.	RECORDS n.	O&M MANUALS o.	CLASSIFICATION: INFORMATION ONLY p.	GOVERNMENT APPROVED q.	REVIEWER r.	CONTRACTOR SCHEDULE DATES: SUBMIT s.	APPROVAL NEEDED BY t.	MATERIAL NEEDED BY u.	CONTRACTOR ACTION: CODE v.	DATE w.	SUBMIT TO GOVERN-MENT x.	GOVERNMENT ACTION: CODE y.	DATE z.	REMARKS aa.
			02276	MODULAR BLOCK WALL																						
			A. 1. a	WALL DESIGN AND DRAWINGS	X	X										X	X									
			A. 4.	WALL UNIT CERTICATION							X				X											
			A. 6. a.	EXPERIENCE		X									X											
			A. 6. b.	SAMPLES								X				X										
			A. 6. c.	MANUFACTURER CERTIFICATE							X				X											
				X = ENGR/CONSTR REVIEW BLANK = RE																						

SUBMITTAL REGISTER
(ER 415 1-10)

CONTRACT NO. DACW41-03-B-0003

TITLE AND LOCATION: BRUSH CREEK PROSPECT BRIDGE

CONTRACTOR:

SPECIFICATION SECTION: 02300

ACTIVITY NO a.	TRANS-MITTAL NO. b.	ITEM NO c.	SPECIFICATION PARAGRAPH NUMBER d.	DESCRIPTION OF ITEM SUBMITTED e.	TYPE OF SUBMITTAL: DATA f.	DRAWINGS g.	INSTRUCTIONS h.	SCHEDULES i.	STATEMENTS j.	REPORTS k.	CERTIFICATES l.	SAMPLES m.	RECORDS n.	O&M MANUALS o.	CLASSIFICATION: INFORMATION ONLY p.	GOVERNMENT APPROVED q.	REVIEWER r.	CONTRACTOR SCHEDULE DATES: SUBMIT s.	APPROVAL NEEDED BY t.	MATERIAL NEEDED BY u.	CONTRACTOR ACTION: CODE v.	DATE w.	SUBMIT TO GOVERN-MENT x.	GOVERNMENT ACTION: CODE y.	DATE z.	REMARKS aa.
			02300	SEEDING AND MULCHING																						
			2. 1	FERTILIZER	X										X											
			2. 6. 2	MULCH								X				X										
			2. 6. 3	ORGANIC MULCH TACKIFIER							X					X	X									
			2. 6. 4	SEED							X				X											
				X = ENGR/CONSTR REVIEW BLANK = RE																						

SUBMITTAL REGISTER
(ER 415 1-10)

CONTRACT NO. DACW41-03-B-0003

TITLE AND LOCATION: BRUSH CREEK PROSPECT BRIDGE

CONTRACTOR:

SPECIFICATION SECTION: 02316

ACTIVITY NO a.	TRANS-MITTAL NO. b.	ITEM NO c.	SPECIFICATION PARAGRAPH NUMBER d.	DESCRIPTION OF ITEM SUBMITTED e.	TYPE OF SUBMITTAL: DATA f.	DRAWINGS g.	INSTRUCTIONS h.	SCHEDULES i.	STATEMENTS j.	REPORTS k.	CERTIFICATES l.	SAMPLES m.	RECORDS n.	O&M MANUALS o.	CLASSIFICATION: INFORMATION ONLY p.	GOVERNMENT APPROVED q.	REVIEWER r.	CONTRACTOR SCHEDULE DATES: SUBMIT s.	APPROVAL NEEDED BY t.	MATERIAL NEEDED BY u.	CONTRACTOR ACTION: CODE v.	DATE w.	SUBMIT TO GOVERN-MENT x.	GOVERNMENT ACTION: CODE y.	DATE z.	REMARKS aa.
			02316	EXC, TRENCH -UTIL OTHER SANIT SEW																						
			1.4	FIELD DENSITY TESTS						X						X										
				BACKFILL MATERIALS						X						X										
				X = ENGR/CONSTR REVIEW BLANK = RE																						

ENG FORM 4288-R, JAN EDITION OF MAR 95 IS OBSOLETE. PAGE _____ O _____ PAGES (Proponent:

SUBMITTAL REGISTER
(ER 415 1-10)

CONTRACT NO. DACW-41-03-B-0003

TITLE AND LOCATION

CONTRACTOR

SPECIFICATION SECTION 02466A

ACTIVITY NO a.	TRANS-MITTAL NO. b.	ITEM NO c.	SPECIFICATION PARAGRAPH NUMBER d.	DESCRIPTION OF ITEM SUBMITTED e.	TYPE OF SUBMITTAL: DATA f.	DRAWINGS g.	INSTRUCTIONS h.	SCHEDULES i.	STATEMENTS j.	REPORTS k.	CERTIFICATES l.	SAMPLES m.	RECORDS n.	O&M MANUALS o.	CLASSIFICATION: INFORMATION ONLY p.	GOVERNMENT APPROVED q.	REVIEWER r.	CONTRACTOR SCHEDULE DATES: SUBMIT s.	APPROVAL NEEDED BY t.	MATERIAL NEEDED BY u.	CONTRACTOR ACTION: CODE v.	DATE w.	SUBMIT TO GOVERN-MENT x.	GOVERNMENT ACTION: CODE y.	DATE z.	REMARKS aa.
			02466A	DRILLED FOUNDAITON CAISSONS (PIERS)																						
			1 . 2	SURVEY							X					X										
			1 . 2	PLAN OF OPERATION					X							X	X									
			1 . 2	QUALIFICAITONS							X					X	X									
			1 . 2	SITE EXPLORATION									X			X	X									
			1 . 2	SHAFT INSTALLATION									X			X	X									
				X = ENGR/CONSTR REVIEW BLANK = RE																						

SUBMITTAL REGISTER
(ER 415-1-10)

CONTRACT NO.
DACAW-41-

AND LOCATION
h Creek Prospect Bridge

CONTRACTOR

SPECIFICATION
02500

TRANSMITTAL NO.	ITEM NO.	SPECIFICATION PARAGRAPH NUMBER	DESCRIPTION OF ITEM SUBMITTED	TYPE OF SUBMITTAL: DATA	DRAWINGS	INSTRUCTIONS	SCHEDULES	STATEMENTS	REPORTS	CERTIFICATES	SAMPLES	RECORDS	O&M MANUALS	CLASSIFICATION: INFORMATION ONLY	GOVERNMENT APPROVED	REVIEWER	CONTRACTOR SCHEDULE DATES: SUBMIT	APPROVAL NEEDED BY	MATERIAL NEEDED BY	CONTRACTOR ACTION: CODE	DATE	SUBMIT TO GOVERNMENT	GOVERNMENT ACTION: CODE	DATE
b	c	d	e	f	g	h	i	j	k	l	m	n	o	p	q	r	s	t	u	v	w	x	y	z
		2503.2	MATERIAL							X				X										
		2506.2 &	AS-built	X	X										X									
		25002	Test Data	X											X									

FORM 4288-R, JAN 97 EDITION OF MAR 95 IS OBSOLETE PAGE 0 PAGES

SUBMITTAL REGISTER
(ER 415 1-10)

CONTRACT NO. DACW41-03-B-0003

TITLE AND LOCATION: BRUSH CREEK PROSPECT BRIDGE

CONTRACTOR:

SPECIFICATION SECTION: 02518

ACTIVITY NO. a.	TRANS-MITTAL NO. b.	ITEM NO c.	SPECIFICATION PARAGRAPH NUMBER d.	DESCRIPTION OF ITEM SUBMITTED e.	TYPE OF SUBMITTAL: DATA f.	DRAWINGS g.	INSTRUCTIONS h.	SCHEDULES i.	STATEMENTS j.	REPORTS k.	CERTIFICATES l.	SAMPLES m.	RECORDS n.	O&M MANUALS o.	CLASSIFICATION: INFORMATION ONLY p.	GOVERNMENT APPROVED q.	REVIEWER r.	CONTRACTOR SCHEDULE DATES: SUBMIT s.	APPROVAL NEEDED BY t.	MATERIAL NEEDED BY u.	CONTRACTOR ACTION: CODE v.	DATE w.	SUBMIT TO GOVERN-MENT x.	GOVERNMENT ACTION: CODE y.	DATE z.	REMARKS aa.
			02518	DETECTABLE CONCRETE PAVER BLOCKS																						
			A. 2. a. 1.	PRODUCT DATA	X					X					X											
			A. 2. b. 1.	SAMPLES								X				X										
			A. 2. c.	ANALYSIS - SAND SIEVE	X										X											
			A. 2. d.	TEST REPORTS						X					X											
				X = ENGR/CONSTR REVIEW BLANK = RE																						

ENG FORM 4288-R, JAN EDITION OF MAR 95 IS OBSOLETE. PAGE _____ O _____ PAGES (Proponent:

SUBMITTAL REGISTER
(ER 415 1-10)

CONTRACT NO. DACW41-03-B-0003

TITLE AND LOCATION: BRUSH CREEK PROSPECT BRIDGE

CONTRACTOR:

SPECIFICATION SECTION: 02525

ACTIVITY NO. a.	TRANS-MITTAL NO. b.	ITEM NO c.	SPECIFICATION PARAGRAPH NUMBER d.	DESCRIPTION OF ITEM SUBMITTED e.	TYPE OF SUBMITTAL: DATA f.	DRAWINGS g.	INSTRUCTIONS h.	SCHEDULES i.	STATEMENTS j.	REPORTS k.	CERTIFICATES l.	SAMPLES m.	RECORDS n.	O&M MANUALS o.	CLASSIFICATION: INFORMATION ONLY p.	GOVERNMENT APPROVED q.	REVIEWER r.	CONTRACTOR SCHEDULE DATES: SUBMIT s.	APPROVAL NEEDED BY t.	MATERIAL NEEDED BY u.	CONTRACTOR ACTION: CODE v.	DATE w.	SUBMIT TO GOVERN-MENT x.	GOVERNMENT ACTION: CODE y.	DATE z.	REMARKS aa.
			02525	CONCRETE BLOCK WALL																						
			A. 2. a. 1	PRODUCT DATA	X					X						X	X									
			A. 2. b. 1.									X				X										
			A. 2. c.			X				X							X									
				X = ENGR/CONSTR REVIEW BLANK = RE																						

SUBMITTAL REGISTER

(ER 415-1-10)

CONTRACT NO. W-91-03-0003

LE AND LOCATION: BRUSH CK. PROSPECT BR

CONTRACTOR:

SPECIFICATION SECTION: 02602

TRANSMITTAL NO.	ITEM NO.	SPECIFICATION PARAGRAPH NUMBER	DESCRIPTION OF ITEM SUBMITTED	TYPE OF SUBMITTAL: DATA	DRAWINGS	INSTRUCTIONS	SCHEDULES	STATEMENTS	REPORTS	CERTIFICATES	SAMPLES	RECORDS	O&M MANUALS	CLASSIFICATION: INFORMATION ONLY	GOVERNMENT APPROVED	REVIEWER	CONTRACTOR SCHEDULE DATES: SUBMIT	APPROVAL NEEDED BY	MATERIAL NEEDED BY	CONTRACTOR ACTION: CODE	DATE	SUBMIT TO GOVERNMENT	GOVERNMENT ACTION: CODE	DATE	REMARKS
b	c	d	e	f	g	h	i	j	k	l	m	n	o	p	q	r	s	t	u	v	w	x	y	z	aa
		2.A	Mil							X				X											
		2.B								X				X											
		2.C								X				X											
		2.D								X				X											
		3	Mix design					X						X											

SUBMITTAL REGISTER

(ER 415-1-10)

CONTRACT NO. DACW41-03-B0003

TITLE AND LOCATION: Brush Ck Prospect Bridge

CONTRACTOR:

SPECIFICATION SECTION: 02676

ACTIVITY NO (a)	TRANSMITTAL NO (b)	ITEM NO (c)	SPECIFICATION PARAGRAPH NUMBER (d)	DESCRIPTION OF ITEM SUBMITTED (e)	TYPE OF SUBMITTAL: DATA (f)	DRAWINGS (g)	INSTRUCTIONS (h)	SCHEDULES (i)	STATEMENTS (j)	REPORTS (k)	CERTIFICATES (l)	SAMPLES (m)	RECORDS (n)	CLASSIFICATION: INFORMATION ONLY (o)	GOVERNMENT APPROVED (p)	REVIEWER (q)	CONTRACTOR SCHEDULE DATES: SUBMIT (r)	APPROVAL NEEDED BY (s)	MATERIAL NEEDED BY (t)	CONTRACTOR ACTION: CODE (u)	DATE (v)	SUBMIT TO GOVERNMENT (w)	GOVERNMENT ACTION: CODE (x)	DATE (y)	REMARKS (z)
			1.5 C	Disinfection Report						X					A	RE									
			1.5 C	Bacteriological Report						X					A	RE									

ENG FORM 4288-R, MAR 95

EDITION OF SEP 93 IS OBSOLETE.

(Proponent CEMP-CE)

SUBMITTAL REGISTER
(ER 415-1-10)

CONTRACT NO.
DACAW-41-03-0003

TITLE AND LOCATION
Brush Creek Prospect Bridge

CONTRACTOR

SPECIFICATION SECTION
02702

ACTIVITY NO. a.	TRANSMITTAL NO. b.	ITEM NO. c.	SPECIFICATION PARAGRAPH NUMBER d.	DESCRIPTION OF ITEM SUBMITTED e.	TYPE OF SUBMITTAL: DATA f.	DRAWINGS g.	INSTRUCTIONS h.	SCHEDULES i.	STATEMENTS j.	REPORTS k.	CERTIFICATES l.	SAMPLES m.	RECORDS n.	O&M MANUALS o.	CLASSIFICATION: INFORMATION ONLY p.	GOVERNMENT q.	APPROVED r.	CONTRACTOR SCHEDULE DATES: SUBMIT s.	APPROVAL NEEDED BY t.	MATERIAL NEEDED BY u.	CONTRACTOR ACTION: CODE v.	DATE w.	SUBMIT TO GOVERNMENT x.	GOVERNMENT ACTION: CODE y.	DATE z.	REMARKS aa.
			1.h	test report						X					X											

ENG FORM 4288-R, JAN 97 EDITION OF MAR 95 IS OBSOLETE PAGE 0 PAGES (Reprint)

SUBMITTAL REGISTER
(ER 415 1-10)

CONTRACT NO. DACW41-03-B-0003

TITLE AND LOCATION: BRUSH CREEK PROSPECT BRIDGE

CONTRACTOR:

SPECIFICATION SECTION: 02710

ACTIVITY NO a.	TRANS-MITTAL NO. b.	ITEM NO c.	SPECIFICATION PARAGRAPH NUMBER d.	DESCRIPTION OF ITEM SUBMITTED e.	TYPE OF SUBMITTAL: DATA f.	DRAWINGS g.	INSTRUCTIONS h.	SCHEDULES i.	STATEMENTS j.	REPORTS k.	CERTIFICATES l.	SAMPLES m.	RECORDS n.	O&M MANUALS o.	CLASSIFICATION: INFORMATION ONLY p.	GOVERNMENT APPROVED q.	REVIEWER r.	CONTRACTOR SCHEDULE DATES: SUBMIT s.	APPROVAL NEEDED BY t.	MATERIAL NEEDED BY u.	CONTRACTOR ACTION: CODE v.	DATE w.	SUBMIT TO GOVERN-MENT x.	GOVERNMENT ACTION: CODE y.	DATE z.	REMARKS aa.
			02710	ROCK ANCHORS																						
			C. 1.	INSTALLATION PLAN	X			X							X											
			C. 2.	ANCHORS		X										X										
			C. 3.	GROUT							X				X											
			C. 4.	STEEL							X				X											
			C. 5.	EPOXY-COATED STEEL BARS							X				X											
				X = ENGR/CONSTR REVIEW BLANK = RE																						

SUBMITTAL REGISTER
(ER 415 1-10)

CONTRACT NO. DACW41-03-B-0003

TITLE AND LOCATION: BRUSH CREEK PROSPECT BRIDGE

CONTRACTOR:

SPECIFICATION SECTION: 02720

ACTIVITY NO. a.	TRANS-MITTAL NO. b.	ITEM NO c.	SPECIFICATION PARAGRAPH NUMBER d.	DESCRIPTION OF ITEM SUBMITTED e.	TYPE OF SUBMITTAL: DATA f.	DRAWINGS g.	INSTRUCTIONS h.	SCHEDULES i.	STATEMENTS j.	REPORTS k.	CERTIFICATES l.	SAMPLES m.	RECORDS n.	O&M MANUALS o.	CLASSIFICATION: INFORMATION ONLY p.	GOVERNMENT APPROVED q.	REVIEWER r.	CONTRACTOR SCHEDULE DATES: SUBMIT s.	APPROVAL NEEDED BY t.	MATERIAL NEEDED BY u.	CONTRACTOR ACTION: CODE v.	DATE w.	SUBMIT TO GOVERN-MENT x.	GOVERNMENT ACTION: CODE y.	DATE z.	REMARKS aa.
			02720	PERFORATED PIPE																						
			A. 3.	MATERIALS							X				X											
				X = ENGR/CONSTR REVIEW BLANK = RE																						

SUBMITTAL REGISTER
(ER 415 1-10)

CONTRACT NO. DACW41-03-B-0003

TITLE AND LOCATION: BRUSH CREEK PROSPECT BRIDGE

CONTRACTOR:

SPECIFICATION SECTION: 02820

ACTIVITY NO. a.	TRANS-MITTAL NO. b.	ITEM NO c.	SPECIFICATION PARAGRAPH NUMBER d.	DESCRIPTION OF ITEM SUBMITTED e.	TYPE OF SUBMITTAL: DATA f.	DRAWINGS g.	INSTRUCTIONS h.	SCHEDULES i.	STATEMENTS j.	REPORTS k.	CERTIFICATES l.	SAMPLES m.	RECORDS n.	O&M MANUALS o.	CLASSIFICATION: INFORMATION ONLY p.	GOVERNMENT APPROVED q.	REVIEWER r.	CONTRACTOR SCHEDULE DATES: SUBMIT s.	APPROVAL NEEDED BY t.	MATERIAL NEEDED BY u.	CONTRACTOR ACTION: CODE v.	DATE w.	SUBMIT TO GOVERN-MENT x.	GOVERNMENT ACTION: CODE y.	DATE z.	REMARKS aa.
			02820	TURF REINFORCEMENT MAT																						
			A. 2. A.	PRODUCT INFORMAITON	X										X											
			A. 2. B.	SAMPLES								X			X											
				X = ENGR/CONSTR REVIEW BLANK = RE																						

ENG FORM 4288-R, JAN EDITION OF MAR 95 IS OBSOLETE. PAGE _____ O _____ PAGES (Proponent:

SUBMITTAL REGISTER
(ER 415 1-10)

CONTRACT NO. DACW41-03-B-0003

TITLE AND LOCATION: BRUSH CREEK PROSPECT BRIDGE

CONTRACTOR:

SPECIFICATION SECTION: 02921

ACTIVITY NO a.	TRANS-MITTAL NO. b.	ITEM NO c.	SPECIFICATION PARAGRAPH NUMBER d.	DESCRIPTION OF ITEM SUBMITTED e.	TYPE OF SUBMITTAL: DATA f.	DRAWINGS g.	INSTRUCTIONS h.	SCHEDULES i.	STATEMENTS j.	REPORTS k.	CERTIFICATES l.	SAMPLES m.	RECORDS n.	O&M MANUALS o.	CLASSIFICATION: INFORMATION ONLY p.	GOVERNMENT APPROVED q.	REVIEWER r.	CONTRACTOR SCHEDULE DATES: SUBMIT s.	APPROVAL NEEDED BY t.	MATERIAL NEEDED BY u.	CONTRACTOR ACTION: CODE v.	DATE w.	SUBMIT TO GOVERN-MENT x.	GOVERNMENT ACTION: CODE y.	DATE z.	REMARKS aa.
			02921	SEEDING																						
			1.2	EQUIPMENT	X										X											
				SURFACE EROSION	X										X											
				CHEMICAL MATERIALS	X										X											
				DELIVERY			X								X											
				X = ENGR/CONSTR REVIEW BLANK = RE																						

SUBMITTAL REGISTER
(ER 415 1-10)

CONTRACT NO. DACW41-03-B-0003

TITLE AND LOCATION: BRUSH CREEK PROSPECT BRIDGE

CONTRACTOR:

SPECIFICATION SECTION: 02923

ACTIVITY NO. a.	TRANS-MITTAL NO. b.	ITEM NO c.	SPECIFICATION PARAGRAPH NUMBER d.	DESCRIPTION OF ITEM SUBMITTED e.	TYPE OF SUBMITTAL: DATA f.	DRAWINGS g.	INSTRUCTIONS h.	SCHEDULES i.	STATEMENTS j.	REPORTS k.	CERTIFICATES l.	SAMPLES m.	RECORDS n.	O&M MANUALS o.	CLASSIFICATION: INFORMATION ONLY p.	GOVERNMENT APPROVED q.	REVIEWER r.	CONTRACTOR SCHEDULE DATES: SUBMIT s.	APPROVAL NEEDED BY t.	MATERIAL NEEDED BY u.	CONTRACTOR ACTION: CODE v.	DATE w.	SUBMIT TO GOVERN-MENT x.	GOVERNMENT ACTION: CODE y.	DATE z.	REMARKS aa.
			02923	TOPSOIL																						
			2. C.	FERTILITY ANALYSIS						X					X											
				X = ENGR/CONSTR REVIEW BLANK = RE																						

ENG FORM 4288-R, JAN EDITION OF MAR 95 IS OBSOLETE. PAGE _____ O _____ PAGES (Proponent:

SUBMITTAL REGISTER
(ER 415 1-10)

CONTRACT NO. DACW41-03-B-0003

TITLE AND LOCATION: BRUSH CREEK PROSPECT BRIDGE

CONTRACTOR:

SPECIFICATION SECTION: 03101

ACTIVITY NO. a.	TRANS-MITTAL NO. b.	ITEM NO c.	SPECIFICATION PARAGRAPH NUMBER d.	DESCRIPTION OF ITEM SUBMITTED e.	TYPE OF SUBMITTAL: DATA f.	DRAWINGS g.	INSTRUCTIONS h.	SCHEDULES i.	STATEMENTS j.	REPORTS k.	CERTIFICATES l.	SAMPLES m.	RECORDS n.	O&M MANUALS o.	CLASSIFICATION: INFORMATION ONLY p.	GOVERNMENT APPROVED q.	REVIEWER r.	CONTRACTOR SCHEDULE DATES: SUBMIT s.	APPROVAL NEEDED BY t.	MATERIAL NEEDED BY u.	CONTRACTOR ACTION: CODE v.	DATE w.	SUBMIT TO GOVERN-MENT x.	GOVERNMENT ACTION: CODE y.	DATE z.	REMARKS aa.
			03101	FORMWORK FOR CONCRETE																						
			C. 1.	SHOP DRAWINGS	X	X										X	X									
			C. 2.	MANUFACTURER LITERATURE			X								X											
				X = ENGR/CONSTR REVIEW BLANK = RE																						

ENG FORM 4288-R, JAN EDITION OF MAR 95 IS OBSOLETE. PAGE _____ O _____ PAGES (Proponent:

SUBMITTAL REGISTER
(ER 415 1-10)

CONTRACT NO. DACW41-03-B-0003

TITLE AND LOCATION: BRUSH CREEK PROSPECT BRIDGE

CONTRACTOR:

SPECIFICATION SECTION: 03150

ACTIVITY NO a.	TRANS-MITTAL NO. b.	ITEM NO c.	SPECIFICATION PARAGRAPH NUMBER d.	DESCRIPTION OF ITEM SUBMITTED e.	TYPE OF SUBMITTAL: DATA f.	DRAWINGS g.	INSTRUCTIONS h.	SCHEDULES i.	STATEMENTS j.	REPORTS k.	CERTIFICATES l.	SAMPLES m.	RECORDS n.	O&M MANUALS o.	CLASSIFICATION: INFORMATION ONLY p.	GOVERNMENT APPROVED q.	REVIEWER r.	CONTRACTOR SCHEDULE DATES: SUBMIT s.	APPROVAL NEEDED BY t.	MATERIAL NEEDED BY u.	CONTRACTOR ACTION: CODE v.	DATE w.	SUBMIT TO GOVERN-MENT x.	GOVERNMENT ACTION: CODE y.	DATE z.	REMARKS aa.
			03150	EXPANSION JINTS AND WATERSTOPS																						
			C.	FILLER STRIPS/WATERSTOPS						X					X											
				X = ENGR/CONSTR REVIEW BLANK = RE																						

SUBMITTAL REGISTER
(ER 415 1-10)

CONTRACT NO. DACW41-03-B-0003

TITLE AND LOCATION: BRUSH CREEK PROSPECT BRIDGE

CONTRACTOR:

SPECIFICATION SECTION: 03151

ACTIVITY NO a.	TRANS-MITTAL NO. b.	ITEM NO c.	SPECIFICATION PARAGRAPH NUMBER d.	DESCRIPTION OF ITEM SUBMITTED e.	TYPE OF SUBMITTAL: DATA f.	DRAWINGS g.	INSTRUCTIONS h.	SCHEDULES i.	STATEMENTS j.	REPORTS k.	CERTIFICATES l.	SAMPLES m.	RECORDS n.	O&M MANUALS o.	CLASSIFICATION: INFORMATION ONLY p.	GOVERNMENT APPROVED q.	REVIEWER r.	CONTRACTOR SCHEDULE DATES: SUBMIT s.	APPROVAL NEEDED BY t.	MATERIAL NEEDED BY u.	CONTRACTOR ACTION: CODE v.	DATE w.	SUBMIT TO GOVERN-MENT x.	GOVERNMENT ACTION: CODE y.	DATE z.	REMARKS aa.
			03151	TEMPORARY WORKS																						
			1.3	TEMPORARY WORK		X										X										
				X = ENGR/CONSTR REVIEW BLANK = RE																						

ENG FORM 4288-R, JAN 97 EDITION OF MAR 95 IS OBSOLETE. PAGE _____ O _____ PAGES (Proponent:

SUBMITTAL REGISTER
(ER 415 1-10)

CONTRACT NO. DACW41-03-B-0003

TITLE AND LOCATION: BRUSH CREEK PROSPECT BRIDGE

CONTRACTOR:

SPECIFICATION SECTION: 03210

ACTIVITY NO. a.	TRANS-MITTAL NO. b.	ITEM NO c.	SPECIFICATION PARAGRAPH NUMBER d.	DESCRIPTION OF ITEM SUBMITTED e.	TYPE OF SUBMITTAL: DATA f.	DRAWINGS g.	INSTRUCTIONS h.	SCHEDULES i.	STATEMENTS j.	REPORTS k.	CERTIFICATES l.	SAMPLES m.	RECORDS n.	O&M MANUALS o.	CLASSIFICATION: INFORMATION ONLY p.	GOVERNMENT APPROVED q.	REVIEWER r.	CONTRACTOR SCHEDULE DATES: SUBMIT s.	APPROVAL NEEDED BY t.	MATERIAL NEEDED BY u.	CONTRACTOR ACTION: CODE v.	DATE w.	SUBMIT TO GOVERN-MENT x.	GOVERNMENT ACTION: CODE y.	DATE z.	REMARKS aa.
			03200	CONCRETE REINFORCEMENT																						
			C . 1.	SHOP DRAWINGS		X										X	X									
			C . 2.	TEST REPORTS						X						X	X									
			C . 3								X				X											
				X = ENGR/CONSTR REVIEW BLANK = RE																						

SUBMITTAL REGISTER
(ER 415 1-10)

CONTRACT NO. DACW41-03-B-0003

TITLE AND LOCATION: BRUSH CREEK PROSPECT BRIDGE

CONTRACTOR

SPECIFICATION SECTION: 03300

ACTIVITY NO. a.	TRANS-MITTAL NO. b.	ITEM NO c.	SPECIFICATION PARAGRAPH NUMBER d.	DESCRIPTION OF ITEM SUBMITTED e.	TYPE OF SUBMITTAL: DATA f.	DRAWINGS g.	INSTRUCTIONS h.	SCHEDULES i.	STATEMENTS j.	REPORTS k.	CERTIFICATES l.	SAMPLES m.	RECORDS n.	O&M MANUALS o.	CLASSIFICATION: INFORMATION ONLY p.	GOVERNMENT APPROVED q.	REVIEWER r.	CONTRACTOR SCHEDULE DATES: SUBMIT s.	APPROVAL NEEDED BY t.	MATERIAL NEEDED BY u.	CONTRACTOR ACTION: CODE v.	DATE w.	SUBMIT TO GOVERN-MENT x.	GOVERNMENT ACTION: CODE y.	DATE z.	REMARKS aa.
			03300	CAST IN PLACE CONCRETE																						
			1.4	MIX DESIGN						X						X	X									
			1.4.8.1	TESTING LABORATORY					X						X											
			2.1.1	ACCELERATORS							X					X	X									
			2.1.2	ADMIXTURES							X					X	X									
			2.1.4	WATER REDUCERS							X					X	X									
			2.2.1	CEMENT						X	X					X	X									
			2.2.2	POZZOLANS						X	X					X	X									
			2.3	AGGREGATES						X						X	X									
			2.4.1	BURLAP							X				X											
			2.4.2	IMPERVIOUS SHEETS							X				X											
			2.4.3	MEMBRANE COMPOUNDS						X	X					X	X									
			2.5	NONSHRINK GROUT							X					X										
			2.6	EPOXY GROUT							X					X										
			2.8	EXPANSION JOINT MATERIALS							X				X											
			2.9	COLD JOINT COMPOUNDS							X				X											
				X = ENGR/CONSTR REVIEW BLANK = RE																						

SUBMITTAL REGISTER
(ER 415 1-10)

CONTRACT NO. DACW41-03-B-0003

TITLE AND LOCATION: BRUSH CREEK PROSPECT BRIDGE

CONTRACTOR:

SPECIFICATION SECTION: 03310

ACTIVITY NO. a.	TRANS-MITTAL NO. b.	ITEM NO c.	SPECIFICATION PARAGRAPH NUMBER d.	DESCRIPTION OF ITEM SUBMITTED e.	TYPE OF SUBMITTAL: DATA f.	DRAWINGS g.	INSTRUCTIONS h.	SCHEDULES i.	STATEMENTS j.	REPORTS k.	CERTIFICATES l.	SAMPLES m.	RECORDS n.	O&M MANUALS o.	CLASSIFICATION: INFORMATION ONLY p.	GOVERNMENT APPROVED q.	REVIEWER r.	CONTRACTOR SCHEDULE DATES: SUBMIT s.	APPROVAL NEEDED BY t.	MATERIAL NEEDED BY u.	CONTRACTOR ACTION: CODE v.	DATE w.	SUBMIT TO GOVERN-MENT x.	GOVERNMENT ACTION: CODE y.	DATE z.	REMARKS aa.
			03310	GROUTING																						
			A. 2. a. 1.	MANUFACTURERS INSTRUCTIONS	X		X			X					X												
			A. 2. b.	MIX DESIGN						X						X	X									
			A. 2. c.	GROUT						X						X	X									
			A. 2. d.	GROUT						X						X										
				X = ENGR/CONSTR REVIEW BLANK = RE																						

SUBMITTAL REGISTER
(ER 415 1-10)

CONTRACT NO. DACW41-03-B-0003

TITLE AND LOCATION: BRUSH CREEK PROSPECT BRIDGE

CONTRACTOR:

SPECIFICATION SECTION: 03311

ACTIVITY NO. a.	TRANS-MITTAL NO. b.	ITEM NO c.	SPECIFICATION PARAGRAPH NUMBER d.	DESCRIPTION OF ITEM SUBMITTED e.	TYPE OF SUBMITTAL: DATA f.	DRAWINGS g.	INSTRUCTIONS h.	SCHEDULES i.	STATEMENTS j.	REPORTS k.	CERTIFICATES l.	SAMPLES m.	RECORDS n.	O&M MANUALS o.	CLASSIFICATION: INFORMATION ONLY p.	GOVERNMENT APPROVED q.	REVIEWER r.	CONTRACTOR SCHEDULE DATES: SUBMIT s.	APPROVAL NEEDED BY t.	MATERIAL NEEDED BY u.	CONTRACTOR ACTION: CODE v.	DATE w.	SUBMIT TO GOVERN-MENT x.	GOVERNMENT ACTION: CODE y.	DATE z.	REMARKS aa.
			03311	COCNETE - STRUCTURES (CHANNEL)																						
			D. 1. (a).	TESTING						X						X	X									
			D. 1. (b).	AGGREGATES							X				X		X									
			E. 1.	MIX DESIGN									X			X	X									
				X = ENGR/CONSTR REVIEW BLANK = RE																						

SUBMITTAL REGISTER
(ER 415 1-10)

CONTRACT NO. DACW41-03-B-0003

TITLE AND LOCATION: BRUSH CREEK PROSPECT BRIDGE

CONTRACTOR:

SPECIFICATION SECTION: 03311A

ACTIVITY NO. a.	TRANS-MITTAL NO. b.	ITEM NO c.	SPECIFICATION PARAGRAPH NUMBER d.	DESCRIPTION OF ITEM SUBMITTED e.	TYPE OF SUBMITTAL: DATA f.	DRAWINGS g.	INSTRUCTIONS h.	SCHEDULES i.	STATEMENTS j.	REPORTS k.	CERTIFICATES l.	SAMPLES m.	RECORDS n.	O&M MANUALS o.	CLASSIFICATION: INFORMATION ONLY p.	GOVERNMENT APPROVED q.	REVIEWER r.	CONTRACTOR SCHEDULE DATES: SUBMIT s.	APPROVAL NEEDED BY t.	MATERIAL NEEDED BY u.	CONTRACTOR ACTION: CODE v.	DATE w.	SUBMIT TO GOVERN-MENT x.	GOVERNMENT ACTION: CODE y.	DATE z.	REMARKS aa.
			03311A	SPECIAL AGGREGATE CONCRETE DECK																						
			C	CEMENT							X					X	X									
			D	FINE AGGREGATES						X						X	X									
			E	COARSE AGGREGATES						X						X	X									
			G	AIR ENTRAINMENT							X					X	X									
			H	ADMIXTURES							X					X	X									
			I	CONCRETE MIX DESIGN						X						X	X									
			R	SEAL COAT	X										X											
			S	GRAFFITI COATING								X			X											
				X = ENGR/CONSTR REVIEW BLANK = RE																						

SUBMITTAL REGISTER
(ER 415 1-10)

CONTRACT NO. DACW41-03-B-0003

TITLE AND LOCATION: BRUSH CREEK PROSPECT BRIDGE

CONTRACTOR:

SPECIFICATION SECTION: 03330

ACTIVITY NO a.	TRANS-MITTAL NO. b.	ITEM NO c.	SPECIFICATION PARAGRAPH NUMBER d.	DESCRIPTION OF ITEM SUBMITTED e.	TYPE OF SUBMITTAL: DATA f.	DRAWINGS g.	INSTRUCTIONS h.	SCHEDULES i.	STATEMENTS j.	REPORTS k.	CERTIFICATES l.	SAMPLES m.	RECORDS n.	O&M MANUALS o.	CLASSIFICATION: INFORMATION ONLY p.	GOVERNMENT APPROVED q.	REVIEWER r.	CONTRACTOR SCHEDULE DATES: SUBMIT s.	APPROVAL NEEDED BY t.	MATERIAL NEEDED BY u.	CONTRACTOR ACTION: CODE v.	DATE w.	SUBMIT TO GOVERN-MENT x.	GOVERNMENT ACTION: CODE y.	DATE z.	REMARKS aa.
			03330	AESTHETIC TREATMENT RETANING WALLS																						
			B. 4.								X					X										
			G. 1.									X				X										
				X = ENGR/CONSTR REVIEW BLANK = R																						

SUBMITTAL REGISTER
(ER 415 1-10)

CONTRACT NO. DACW41-03-B-0003

TITLE AND LOCATION: BRUSH CREEK PROSPECT BRIDGE

CONTRACTOR:

SPECIFICATION SECTION: 03362

ACTIVITY NO. a.	TRANS-MITTAL NO. b.	ITEM NO c.	SPECIFICATION PARAGRAPH NUMBER d.	DESCRIPTION OF ITEM SUBMITTED e.	TYPE OF SUBMITTAL: DATA f.	DRAWINGS g.	INSTRUCTIONS h.	SCHEDULES i.	STATEMENTS j.	REPORTS k.	CERTIFICATES l.	SAMPLES m.	RECORDS n.	O&M MANUALS o.	CLASSIFICATION: INFORMATION ONLY p.	GOVERNMENT APPROVED q.	REVIEWER r.	CONTRACTOR SCHEDULE DATES: SUBMIT s.	APPROVAL NEEDED BY t.	MATERIAL NEEDED BY u.	CONTRACTOR ACTION: CODE v.	DATE w.	SUBMIT TO GOVERN-MENT x.	GOVERNMENT ACTION: CODE y.	DATE z.	REMARKS aa.
			03362	MANHOLE CEMENTITIOUS LINER																						
			1. 4. B.	WORK PLAN				X								X										
			1. 4. C.	TESTING REPORTS						X						X										
			1. 4. D.	TESTING REPORTS						X						X										
				X = ENGR/CONSTR REVIEW BLANK = R																						

ENG FORM 4288-R, JAN EDITION OF MAR 95 IS OBSOLETE. PAGE _____ O _____ PAGES (Proponent:

SUBMITTAL REGISTER
(ER 415 1-10)

CONTRACT NO. DACW41-03-B-0003

TITLE AND LOCATION: BRUSH CREEK PROSPECT BRIDGE

CONTRACTOR:

SPECIFICATION SECTION: 03370

ACTIVITY NO. a.	TRANS-MITTAL NO. b.	ITEM NO c.	SPECIFICATION PARAGRAPH NUMBER d.	DESCRIPTION OF ITEM SUBMITTED e.	TYPE OF SUBMITTAL: DATA f.	DRAWINGS g.	INSTRUCTIONS h.	SCHEDULES i.	STATEMENTS j.	REPORTS k.	CERTIFICATES l.	SAMPLES m.	RECORDS n.	O&M MANUALS o.	CLASSIFICATION: INFORMATION ONLY p.	GOVERNMENT APPROVED q.	REVIEWER r.	CONTRACTOR SCHEDULE DATES: SUBMIT s.	APPROVAL NEEDED BY t.	MATERIAL NEEDED BY u.	CONTRACTOR ACTION: CODE v.	DATE w.	SUBMIT TO GOVERN-MENT x.	GOVERNMENT ACTION: CODE y.	DATE z.	REMARKS aa.
			03370	SEWER MANHOLE CONSTRUCTION																						
			3.01	NONSHRINK GROUT									X			X										
				X = ENGR/CONSTR REVIEW BLANK = R																						

ENG FORM 4288-R, JAN EDITION OF MAR 95 IS OBSOLETE. PAGE _____ O _____ PAGES (Proponent:

SUBMITTAL REGISTER
(ER 415 1-10)

CONTRACT NO. DACW41-03-B-0003

TITLE AND LOCATION: BRUSH CREEK PROSPECT BRIDGE

CONTRACTOR:

SPECIFICATION SECTION: 03400

ACTIVITY NO. a.	TRANS-MITTAL NO. b.	ITEM NO c.	SPECIFICATION PARAGRAPH NUMBER d.	DESCRIPTION OF ITEM SUBMITTED e.	TYPE OF SUBMITTAL: DATA f.	DRAWINGS g.	INSTRUCTIONS h.	SCHEDULES i.	STATEMENTS j.	REPORTS k.	CERTIFICATES l.	SAMPLES m.	RECORDS n.	O&M MANUALS o.	CLASSIFICATION: INFORMATION ONLY p.	GOVERNMENT APPROVED q.	REVIEWER r.	CONTRACTOR SCHEDULE DATES: SUBMIT s.	APPROVAL NEEDED BY t.	MATERIAL NEEDED BY u.	CONTRACTOR ACTION: CODE v.	DATE w.	SUBMIT TO GOVERN-MENT x.	GOVERNMENT ACTION: CODE y.	DATE z.	REMARKS aa.
			03400	PAVED SLOPE PROTECTION																						
			E. 1.	SAMPLES								X				X										
			E. 2.	DRAWINGS		X									X											
				X = ENGR/CONSTR REVIEW BLANK = R																						

ENG FORM 4288-R, JAN EDITION OF MAR 95 IS OBSOLETE. PAGE _____ O _____ PAGES (Proponent:

SUBMITTAL REGISTER
(ER 415 1-10)

CONTRACT NO. DACW41-03-B-0003

TITLE AND LOCATION: BRUSH CREEK PROSPECT BRIDGE

CONTRACTOR:

SPECIFICATION SECTION: 05018

ACTIVITY NO a.	TRANS-MITTAL NO. b.	ITEM NO c.	SPECIFICATION PARAGRAPH NUMBER d.	DESCRIPTION OF ITEM SUBMITTED e.	TYPE OF SUBMITTAL: DATA f.	DRAWINGS g.	INSTRUCTIONS h.	SCHEDULES i.	STATEMENTS j.	REPORTS k.	CERTIFICATES l.	SAMPLES m.	RECORDS n.	O&M MANUALS o.	CLASSIFICATION: INFORMATION ONLY p.	GOVERNMENT APPROVED q.	REVIEWER r.	CONTRACTOR SCHEDULE DATES: SUBMIT s.	APPROVAL NEEDED BY t.	MATERIAL NEEDED BY u.	CONTRACTOR ACTION: CODE v.	DATE w.	SUBMIT TO GOVERN-MENT x.	GOVERNMENT ACTION: CODE y.	DATE z.	REMARKS aa.
			05018	ELASTOMERIC BEARING DEVICES																						
			1.2	MATERIALS AND TEST REPORTS							X					X	X									
				X = ENGR/CONSTR REVIEW BLANK = R																						

SUBMITTAL REGISTER
(ER 415 1-10)

CONTRACT NO. DACW41-03-B-0003

TITLE AND LOCATION: BRUSH CREEK PROSPECT BRIDGE

CONTRACTOR:

SPECIFICATION SECTION: 05100

ACTIVITY NO a.	TRANS-MITTAL NO. b.	ITEM NO c.	SPECIFICATION PARAGRAPH NUMBER d.	DESCRIPTION OF ITEM SUBMITTED e.	TYPE OF SUBMITTAL: DATA f.	DRAWINGS g.	INSTRUCTIONS h.	SCHEDULES i.	STATEMENTS j.	REPORTS k.	CERTIFICATES l.	SAMPLES m.	RECORDS n.	O&M MANUALS o.	CLASSIFICATION: INFORMATION ONLY p.	GOVERNMENT APPROVED q.	REVIEWER r.	CONTRACTOR SCHEDULE DATES: SUBMIT s.	APPROVAL NEEDED BY t.	MATERIAL NEEDED BY u.	CONTRACTOR ACTION: CODE v.	DATE w.	SUBMIT TO GOVERN-MENT x.	GOVERNMENT ACTION: CODE y.	DATE z.	REMARKS aa.
			05100	STEEL STRUCTURES																						
			1. 3.	MILL ORDERS						X						X										
			1. 3.	MILL REPORTS							X					X										
			1. 3.	WELDED STUD CONNECTORS							X					X	X									
			1. 3.	CHARPY V-NOTCH IMPACT TESTS						X						X	X									
			1. 3.	SHOP DRAWINGS		X										X	X									
			1. 3.	ERECTION DRAWINGS		X										X	X									
				X = ENGR/CONSTR REVIEW BLANK = R																						

ENG FORM 4288-R, JAN EDITION OF MAR 95 IS OBSOLETE. PAGE _____ O _____ PAGES (Proponent:

SUBMITTAL REGISTER
(ER 415 1-10)

CONTRACT NO. DACW41-03-B-0003

TITLE AND LOCATION: BRUSH CREEK PROSPECT BRIDGE

CONTRACTOR:

SPECIFICATION SECTION: 05300

ACTIVITY NO. a.	TRANS-MITTAL NO. b.	ITEM NO c.	SPECIFICATION PARAGRAPH NUMBER d.	DESCRIPTION OF ITEM SUBMITTED e.	TYPE OF SUBMITTAL: DATA f.	DRAWINGS g.	INSTRUCTIONS h.	SCHEDULES i.	STATEMENTS j.	REPORTS k.	CERTIFICATES l.	SAMPLES m.	RECORDS n.	O&M MANUALS o.	CLASSIFICATION: INFORMATION ONLY p.	GOVERNMENT APPROVED q.	REVIEWER r.	CONTRACTOR SCHEDULE DATES: SUBMIT s.	APPROVAL NEEDED BY t.	MATERIAL NEEDED BY u.	CONTRACTOR ACTION: CODE v.	DATE w.	SUBMIT TO GOVERN-MENT x.	GOVERNMENT ACTION: CODE y.	DATE z.	REMARKS aa.
			05300	GATEWELL DRAINAGE SYSTEM																						
			C. 1. (a)	DRAWINGS		X										X	X									
			C. 1. (b)	INSTRUCITONS	X		X								X											
			C. 1. (c)	MATERIALS AND EQUIPMENT							X					X										
			C. 2.	BOLTS							X					X										
			C. 3.	OPERATIONS AND MAINTENANCE MANUAL			X									X	X									
				X = ENGR/CONSTR REVIEW BLANK = R																						

SUBMITTAL REGISTER
(ER 415 1-10)

CONTRACT NO. DACW41-03-B-0003

TITLE AND LOCATION: BRUSH CREEK PROSPECT BRIDGE

CONTRACTOR:

SPECIFICATION SECTION: 05500

ACTIVITY NO a.	TRANS-MITTAL NO. b.	ITEM NO c.	SPECIFICATION PARAGRAPH NUMBER d.	DESCRIPTION OF ITEM SUBMITTED e.	TYPE OF SUBMITTAL: DATA f.	DRAWINGS g.	INSTRUCTIONS h.	SCHEDULES i.	STATEMENTS j.	REPORTS k.	CERTIFICATES l.	SAMPLES m.	RECORDS n.	O&M MANUALS o.	CLASSIFICATION: INFORMATION ONLY p.	GOVERNMENT APPROVED q.	REVIEWER r.	CONTRACTOR SCHEDULE DATES: SUBMIT s.	APPROVAL NEEDED BY t.	MATERIAL NEEDED BY u.	CONTRACTOR ACTION: CODE v.	DATE w.	SUBMIT TO GOVERN-MENT x.	GOVERNMENT ACTION: CODE y.	DATE z.	REMARKS aa.
			05500	MISCELLANEOUS METALS																						
			B. 1. (a)	DRAWINGS		X										X	X									
			B. 2 (a)	METAL ITEMS						X					X											
				X = ENGR/CONSTR REVIEW BLANK = R																						

ENG FORM 4288-R, JAN EDITION OF MAR 95 IS OBSOLETE. PAGE _____ O _____ PAGES (Proponent:

SUBMITTAL REGISTER
(ER 415 1-10)

CONTRACT NO. DACW41-03-B-0003

TITLE AND LOCATION: BRUSH CREEK PROSPECT BRIDGE

CONTRACTOR

SPECIFICATION SECTION: 05540

ACTIVITY NO a.	TRANS-MITTAL NO. b.	ITEM NO c.	SPECIFICATION PARAGRAPH NUMBER d.	DESCRIPTION OF ITEM SUBMITTED e.	TYPE OF SUBMITTAL: DATA f.	DRAWINGS g.	INSTRUCTIONS h.	SCHEDULES i.	STATEMENTS j.	REPORTS k.	CERTIFICATES l.	SAMPLES m.	RECORDS n.	O&M MANUALS o.	CLASSIFICATION: INFORMATION ONLY p.	GOVERNMENT APPROVED q.	REVIEWER r.	CONTRACTOR SCHEDULE DATES: SUBMIT s.	APPROVAL NEEDED BY t.	MATERIAL NEEDED BY u.	CONTRACTOR ACTION: CODE v.	DATE w.	SUBMIT TO GOVERN-MENT x.	GOVERNMENT ACTION: CODE y.	DATE z.	REMARKS aa.
			05540	STEEL H-PILES																						
			1.3	EQUIPMENT	X											X	X									
			1. 3	DRAWINGS		X										X	X									
			1. 3	MATERIALS							X					X										
			1.3	PILE CAPACITY							X					X	X									
			1.3	PILE DRIVING											X											
				X = ENGR/CONSTR REVIEW BLANK = R																						

SUBMITTAL REGISTER
(ER 415 1-10)

CONTRACT NO. DACW41-03-B-0003

TITLE AND LOCATION: BRUSH CREEK PROSPECT BRIDGE

CONTRACTOR:

SPECIFICATION SECTION: 05600

ACTIVITY NO a.	TRANS-MITTAL NO. b.	ITEM NO c.	SPECIFICATION PARAGRAPH NUMBER d.	DESCRIPTION OF ITEM SUBMITTED e.	TYPE OF SUBMITTAL: DATA f.	DRAWINGS g.	INSTRUCTIONS h.	SCHEDULES i.	STATEMENTS j.	REPORTS k.	CERTIFICATES l.	SAMPLES m.	RECORDS n.	O&M MANUALS o.	CLASSIFICATION: INFORMATION ONLY p.	GOVERNMENT APPROVED q.	REVIEWER r.	CONTRACTOR SCHEDULE DATES: SUBMIT s.	APPROVAL NEEDED BY t.	MATERIAL NEEDED BY u.	CONTRACTOR ACTION: CODE v.	DATE w.	SUBMIT TO GOVERN-MENT x.	GOVERNMENT ACTION: CODE y.	DATE z.	REMARKS aa.
			05600	PIPING, GENERAL, PRESSURE SERVICE																						
			C. 1.	WELDING	X											X										
			C. 2.	PIPING		X										X										
			C. 3.	MATERIAL AND EQUIPMENT							X				X											
				X = ENGR/CONSTR REVIEW BLANK = R																						

SUBMITTAL REGISTER
(ER 415 1-10)

CONTRACT NO. DACW41-03-B-0003

TITLE AND LOCATION: BRUSH CREEK PROSPECT BRIDGE

CONTRACTOR:

SPECIFICATION SECTION: 07900

ACTIVITY NO. a.	TRANS-MITTAL NO. b.	ITEM NO c.	SPECIFICATION PARAGRAPH NUMBER d.	DESCRIPTION OF ITEM SUBMITTED e.	TYPE OF SUBMITTAL: DATA f.	DRAWINGS g.	INSTRUCTIONS h.	SCHEDULES i.	STATEMENTS j.	REPORTS k.	CERTIFICATES l.	SAMPLES m.	RECORDS n.	O&M MANUALS o.	CLASSIFICATION: INFORMATION ONLY p.	GOVERNMENT APPROVED q.	REVIEWER r.	CONTRACTOR SCHEDULE DATES: SUBMIT s.	APPROVAL NEEDED BY t.	MATERIAL NEEDED BY u.	CONTRACTOR ACTION: CODE v.	DATE w.	SUBMIT TO GOVERN-MENT x.	GOVERNMENT ACTION: CODE y.	DATE z.	REMARKS aa.
			07900	JOINT SEALANTS																						
			A. 4	MANUFACTURERS DATA	X											X										
			A. 4.	SAMPLES								X				X										
				X = ENGR/CONSTR REVIEW BLANK = R																						

SUBMITTAL REGISTER
(ER 415 1-10)

CONTRACT NO. DACW41-03-B-0003

TITLE AND LOCATION: BRUSH CREEK PROSPECT BRIDGE

CONTRACTOR:

SPECIFICATION SECTION: 09901

ACTIVITY NO a.	TRANS-MITTAL NO. b.	ITEM NO c.	SPECIFICATION PARAGRAPH NUMBER d.	DESCRIPTION OF ITEM SUBMITTED e.	TYPE OF SUBMITTAL: DATA f.	DRAWINGS g.	INSTRUCTIONS h.	SCHEDULES i.	STATEMENTS j.	REPORTS k.	CERTIFICATES l.	SAMPLES m.	RECORDS n.	O&M MANUALS o.	CLASSIFICATION: INFORMATION ONLY p.	GOVERNMENT APPROVED q.	REVIEWER r.	CONTRACTOR SCHEDULE DATES: SUBMIT s.	APPROVAL NEEDED BY t.	MATERIAL NEEDED BY u.	CONTRACTOR ACTION: CODE v.	DATE w.	SUBMIT TO GOVERN-MENT x.	GOVERNMENT ACTION: CODE y.	DATE z.	REMARKS aa.
			09901	PAINTING																						
			1 . 3	PAINT	X											X										
			1 . 3	MIX AND THINNING			X									X										
			1 . 3	APPLICATION			X									X										
			1 . 3	BATCH REPORTS						X						X										
			1 . 3	LEAD							X				X											
			1 . 3	MILDEWCIDE AND INSECTICIDE							X				X											
			1 . 3	VOLATILE ORGANIC COMPOUND CONTENT							X				X											
				X = ENGR/CONSTR REVIEW BLANK = R																						

SUBMITTAL REGISTER
(ER 415 1-10)

CONTRACT NO. DACW41-03-B-0003

TITLE AND LOCATION: BRUSH CREEK PROSPECT BRIDGE

CONTRACTOR

SPECIFICATION SECTION: 11310

ACTIVITY NO a.	TRANS-MITTAL NO. b.	ITEM NO c.	SPECIFICATION PARAGRAPH NUMBER d.	DESCRIPTION OF ITEM SUBMITTED e.	TYPE OF SUBMITTAL: DATA f.	DRAWINGS g.	INSTRUCTIONS h.	SCHEDULES i.	STATEMENTS j.	REPORTS k.	CERTIFICATES l.	SAMPLES m.	RECORDS n.	O&M MANUALS o.	CLASSIFICATION: INFORMATION ONLY p.	GOVERNMENT APPROVED q.	REVIEWER r.	CONTRACTOR SCHEDULE DATES: SUBMIT s.	APPROVAL NEEDED BY t.	MATERIAL NEEDED BY u.	CONTRACTOR ACTION: CODE v.	DATE w.	SUBMIT TO GOVERN-MENT x.	GOVERNMENT ACTION: CODE y.	DATE z.	REMARKS aa.
			11310	RECIRCULATION PUMP																						
			C. 1.	PUMP CHARACTERISTICS	X		X									X	X									
			C. 2.	SPARE PARTS	X											X										
			C . 3	WIRING AND EQUIPMENT		X										X	X									
			C . 4	DIAGRAMS AND INSTRUCTIONS			X								X		X									
			C . 5	PERFORMANCE TESTS						X					X		X									
			C . 6	MAINTENANCE MANUALS			X									X	X									
				X = ENGR/CONSTR REVIEW BLANK = R																						

SUBMITTAL REGISTER
(ER 415 1-10)

CONTRACT NO. DACW41-03-B-0003

TITLE AND LOCATION: BRUSH CREEK PROSPECT BRIDGE

CONTRACTOR

SPECIFICATION SECTION: 13110A

ACTIVITY NO a.	TRANS-MITTAL NO. b.	ITEM NO c.	SPECIFICATION PARAGRAPH NUMBER d.	DESCRIPTION OF ITEM SUBMITTED e.	TYPE OF SUBMITTAL: DATA f.	DRAWINGS g.	INSTRUCTIONS h.	SCHEDULES i.	STATEMENTS j.	REPORTS k.	CERTIFICATES l.	SAMPLES m.	RECORDS n.	O&M MANUALS o.	CLASSIFICATION: INFORMATION ONLY p.	GOVERNMENT APPROVED q.	REVIEWER r.	CONTRACTOR SCHEDULE DATES: SUBMIT s.	APPROVAL NEEDED BY t.	MATERIAL NEEDED BY u.	CONTRACTOR ACTION: CODE v.	DATE w.	SUBMIT TO GOVERN-MENT x.	GOVERNMENT ACTION: CODE y.	DATE z.	REMARKS aa.
			13110A	CATHODIC PROTECTION SYSTEM																						
			1 . 2	SHOP DRAWINGS		X										X	X									
			1 . 2	CONTRACTOR MODS		X										X	X									
			1 . 2	EQUIPMENT AND MATERIALS	X											X	X									
			1 . 2	SPARE PARTS	X										X											
			1 . 2	TESTS AND MEASUREMENTS			X									X										
			1 . 2	CONTRACTOR MODS									X			X										
			1 . 2	CATHODIC PROTECTION SYSTEM							X					X										
			1 . 2	CORROSION EXPERT							X					X										
			1 . 2	OPERATION AND MAINTENANCE									X			X										
			1 . 2	TRAINING COURSE									X			X										
				X = ENGR/CONSTR REVIEW BLANK = R																						

SUBMITTAL REGISTER
(ER 415 1-10)

CONTRACT NO. DACW41-03-B-0003

TITLE AND LOCATION: BRUSH CREEK PROSPECT BRIDGE

CONTRACTOR:

SPECIFICATION SECTION: 15600

ACTIVITY NO a.	TRANS-MITTAL NO. b.	ITEM NO c.	SPECIFICATION PARAGRAPH NUMBER d.	DESCRIPTION OF ITEM SUBMITTED e.	TYPE OF SUBMITTAL: DATA f.	DRAWINGS g.	INSTRUCTIONS h.	SCHEDULES i.	STATEMENTS j.	REPORTS k.	CERTIFICATES l.	SAMPLES m.	RECORDS n.	O&M MANUALS o.	CLASSIFICATION: INFORMATION ONLY p.	GOVERNMENT APPROVED q.	REVIEWER r.	CONTRACTOR SCHEDULE DATES: SUBMIT s.	APPROVAL NEEDED BY t.	MATERIAL NEEDED BY u.	CONTRACTOR ACTION: CODE v.	DATE w.	SUBMIT TO GOVERN-MENT x.	GOVERNMENT ACTION: CODE y.	DATE z.	REMARKS aa.
			15600	RECIRCULATION SYSTEM																						
			A. 3. A.	WELDING			X									X										
			A. 3. B.	PIPING/SLEEVES/CONDUIT		X										X	X									
			A. 3. C.	MATERIAIALS AND EQUIPMENT							X				X											
				X = ENGR/CONSTR REVIEW BLANK = R																						

SUBMITTAL REGISTER
(ER 415 1-10)

CONTRACT NO. DACW41-03-B-0003

TITLE AND LOCATION: BRUSH CREEK PROSPECT BRIDGE

CONTRACTOR:

SPECIFICATION SECTION: 16001

ACTIVITY NO. a.	TRANS-MITTAL NO. b.	ITEM NO c.	SPECIFICATION PARAGRAPH NUMBER d.	DESCRIPTION OF ITEM SUBMITTED e.	TYPE OF SUBMITTAL: DATA f.	DRAWINGS g.	INSTRUCTIONS h.	SCHEDULES i.	STATEMENTS j.	REPORTS k.	CERTIFICATES l.	SAMPLES m.	RECORDS n.	O&M MANUALS o.	CLASSIFICATION: INFORMATION ONLY p.	GOVERNMENT APPROVED q.	REVIEWER r.	CONTRACTOR SCHEDULE DATES: SUBMIT s.	APPROVAL NEEDED BY t.	MATERIAL NEEDED BY u.	CONTRACTOR ACTION: CODE v.	DATE w.	SUBMIT TO GOVERN-MENT x.	GOVERNMENT ACTION: CODE y.	DATE z.	REMARKS aa.
			16001	TRAFFIC SIGNAL																						
				X = ENGR/CONSTR REVIEW BLANK = R																						

SUBMITTAL REGISTER
(ER 415 1-10)

CONTRACT NO. DACW41-03-B-0003

TITLE AND LOCATION: Brush Creek Prospect Bridge

CONTRACTOR

SPECIFICATION SECTION: 16070A

ACTIVITY NO a.	TRANS-MITTAL NO. b.	ITEM NO c.	SPECIFICATION PARAGRAPH NUMBER d.	DESCRIPTION OF ITEM SUBMITTED e.	TYPE OF SUBMITTAL: DATA f.	DRAWINGS g.	INSTRUCTIONS h.	SCHEDULES i.	STATEMENTS j.	REPORTS k.	CERTIFICATES l.	SAMPLES m.	RECORDS n.	O&M MANUALS o.	CLASSIFICATION: INFORMATION ONLY p.	GOVERNMENT APPROVED q.	REVIEWER r.	CONTRACTOR SCHEDULE DATES: SUBMIT s.	APPROVAL NEEDED BY t.	MATERIAL NEEDED BY u.	CONTRACTOR ACTION: CODE v.	DATE w.	SUBMIT TO GOVERN-MENT x.	GOVERNMENT ACTION: CODE y.	DATE z.	REMARKS aa.
			16070A	SEISMIC PROTECTION ELECTRICAL EQUIP																						
			1. 3. 4	BRACING	X											X	X									
			1 . 4	EQUIPMENT	X	X										X	X									
			3. 2.	LIGHTING FIXTURES	X	X										X	X									
				X = ENGR/CONSTR REVIEW BLANK = RE																						

SUBMITTAL REGISTER
(ER 415 1-10)

CONTRACT NO. DACW41-03-B-0003

TITLE AND LOCATION: Brush Creek Prospect Bridge

CONTRACTOR:

SPECIFICATION SECTION: 16375

ACTIVITY NO a.	TRANS-MITTAL NO. b.	ITEM NO c.	SPECIFICATION PARAGRAPH NUMBER d.	DESCRIPTION OF ITEM SUBMITTED e.	TYPE OF SUBMITTAL: DATA f.	DRAWINGS g.	INSTRUCTIONS h.	SCHEDULES i.	STATEMENTS j.	REPORTS k.	CERTIFICATES l.	SAMPLES m.	RECORDS n.	O&M MANUALS o.	CLASSIFICATION: INFORMATION ONLY p.	GOVERNMENT APPROVED q.	REVIEWER r.	CONTRACTOR SCHEDULE DATES: SUBMIT s.	APPROVAL NEEDED BY t.	MATERIAL NEEDED BY u.	CONTRACTOR ACTION: CODE v.	DATE w.	SUBMIT TO GOVERN-MENT x.	GOVERNMENT ACTION: CODE y.	DATE z.	REMARKS aa.
			16375	ELECTRICAL DISTRIBUTION SYSTEM, UND																						
				MANFACTURER CATALOG	X											X										
				MATERIALS / EQUIPMENT	X											X										
				INSTALLATION	X											X										
				ELEC DSITR SYSTEM						X		X				X										
				AS BUILT		X										X										
				FIELD REPORTS						X						X										
				FIELD TESTS						X						X										
				CABLE INSTALLATION						X						X										
				MATERIALS / EQUIPMENT						X						X										
				INSTALLATION QUALIFICATIONS					X							X										
				X = ENGR/CONSTR REVIEW BLANK = RE																						

SECTION 01354

ENVIRONMENTAL PROTECTION FOR CIVIL WORKS
10/95

PART 1 GENERAL

1.1 REFERENCES

The publications listed below form a part of this specification to the extent referenced. The publications are referred to in the text by basic designation only.

CODE OF FEDERAL REGULATIONS (CFR)

40 CFR 261	Identification and Listing of Hazardous Waste

ENGINEERING MANUALS (EM)

EM 385-1-1	(1996) U.S. Army Corps on Engineers Safety and Health Requirements Manual

1.2 DEFINITIONS

Environmental pollution and damage is defined as the presence of chemical, physical, or biological elements or agents that adversely affect human health or welfare; unfavorably alter ecological balances of plant or animal communities; or degrade the environment from an aesthetic, cultural or historic perspective. Environmental protection is the prevention/control of pollution and habitat disruption that may occur during construction. The control of environmental pollution and damage requires consideration of air, water, land, biological and cultural resources; and includes management of visual aesthetics; noise; solid, chemical, gaseous, and liquid waste; radiant energy and radioactive materials; and other pollutants.

1.3 SUBMITTALS

Government approval is required for all submittals with a "GA" designation; submittals having an "FIO" designation are for information only. The following shall be submitted in accordance with Section 01330 SUBMITTAL PROCEDURES:

SD-08 Statements

Retention Pond Removal Plan; GA.

Submit plan detailing Contractor's procedures for testing and removal of retention pond sediment.

1.4 ENVIRONMENTAL PROTECTION REQUIREMENTS

The Contractor shall comply with all applicable Federal, State, and local laws and regulations. The Contractor shall provide environmental protective measures and procedures to prevent and control pollution, limit habitat disruption, and correct environmental damage that occurs during construction.

1.4.1 Protection of Features

This section supplements the Contract Clause PROTECTION OF EXISTING VEGETATION, STRUCTURES, EQUIPMENT, UTILITIES, AND IMPROVEMENTS (APR 1984). The Contractor shall prepare a list of features requiring protection under the provisions of the contract clause which are not specially identified on the drawings as environmental features requiring protection. The Contractor shall protect those environmental features, indicated specially on the drawings, in spite of interference which their preservation may cause to the Contractor's work under the contract.

1.4.2 Permits

This section supplements the Contractor's responsibility under the contract clause PERMITS AND RESPONSIBILITIES to the extent that the Government has already obtained the 404 environmental permit. The Government has applied for the 401 environmental permit and the city of Kansas City has agreed to grant the NPDES permit. The Contractor shall comply with the terms, and conditions of these permits. The Contractor shall also comply with other environmental commitments made by the Government. Copies of permit terms and conditions as well as those other commitments made by the Government are available upon request.

1.4.3 Special Environmental Requirements

The Contractor shall comply with the special environmental requirements included at the end of this section. These special environmental requirements are an outgrowth of environmental commitments made by the Government during the project development.

1.4.4 Environmental Assessment of Contract Deviations

The Contract specifications have been prepared to comply with the special conditions and mitigation measures of an environmental nature which were established during the planning and development of this project. The Contractor is advised that deviations from the drawings or specifications (e.g., proposed alternate borrow areas, disposal areas, staging areas, alternate access routes, etc.) could result in the requirement for the Government to reanalyze the project from an environmental standpoint. Deviations from the construction methods and procedures indicated by the plans and specifications which may have an environmental impact will require an extended review, processing, and approval time by the Government. The Contracting Officer reserves the right to disapprove alternate methods, even if they are more cost effective, if the Contracting Officer determines that the proposed alternate method will have an adverse environmental impact.

1.5 ENVIRONMENTAL PROTECTION PLAN

Within 20 calendar days of Notice of Award, the Contractor shall submit an Environmental Protection Plan for review and acceptance by the Contracting Officer. The Government will consider an interim plan for the first 30 days of operations. However, the Contractor shall furnish an acceptable final plan not later than 30 calendar days after receipt of the Notice to Proceed. Acceptance is conditional and is predicated upon satisfactory performance during construction. The Government reserves the right to require the Contractor to make changes in the Environmental Protection Plan or operations if the Contracting Officer determines that environmental protection requirements are not being met. The plan shall detail the actions which the Contractor shall take to comply with all applicable Federal, State, and local laws and regulations concerning environmental protection and pollution control and abatement, as well as the additional specific requirements of this contract. No physical work at the site shall begin prior to acceptance of the Contractor s plan or an interim plan covering the work to be performed. The environmental protection plan shall include, but not be limited to, the following:

1.5.1 List of State and Local Laws and Regulations

The Contractor shall provide as part of the Environmental Protection Plan a list of all State and local environmental laws and regulations which apply to the construction operations under the Contract.

1.5.2 Spill Control Plan

The Contractor shall include as part of the environmental protection plan, a Spill Control Plan. The plan shall include the procedures, instructions, and reports to be used in the event of an unforeseen spill of a substance regulated by the Emergency Response and Community Right-to-Know Act or regulated under State or local laws or regulations. The Spill Control Plan supplements the requirements of EM 385-1-1. This plan shall include as a minimum:

a. The name of the individual who will be responsible for implementing and supervising the containment and cleanup.

b. Training requirements for Contractor's personnel and methods of accomplishing the training.

c. A list of materials and equipment to be immediately available at the job site, tailored to cleanup work of the potential hazard(s) identified.

d. The names and locations of suppliers of containment materials and locations of additional fuel oil recovery, cleanup, restoration, and material-placement equipment available in case of an unforeseen spill emergency.

e. The methods and procedures to be used for expeditious contaminant cleanup.

f. The name of the individual who will report any spills or hazardous

substance releases and who will follow up with complete documentation. This individual shall immediately notify the Contracting Officer in addition to the legally required Federal, State, and local reporting channels (including the National Response Center 1-800-424-8802) if a reportable quantity spill occurs. The plan shall contain a list of the required reporting channels and telephone numbers.

1.5.3 Recycling and Waste Minimization Plan

The Contractor shall submit a Recycling and Waste Minimization Plan as a part of the Environmental Protection Plan. The plan shall detail the Contractor's actions to comply with the following recycling and waste minimization requirements:

a. The Contractor shall participate in State and local government sponsored recycling programs to reduce the volume of solid waste materials at the source.

1.5.4 Contaminant Prevention Plan

As a part of the Environmental Protection Plan, the Contractor shall prepare a contaminant prevention statement identifying potentially hazardous substances to be used on the job site and intended actions to prevent accidental or intentional introduction of such materials into the air, water, or ground. The Contractor shall detail provisions to be taken to meet Federal, State, and local laws and regulations regarding the storage and handling of these materials.

1.5.5 Environmental Monitoring

The Contractor shall include in the plan the details of environmental monitoring requirements under the laws and regulations and a description of how this monitoring will be accomplished.

PART 2 PRODUCTS (Not Applicable)

PART 3 EXECUTION

3.1 SPECIAL ENVIRONMENTAL PROTECTION REQUIREMENTS

3.1.1 Tree Protection

No ropes, cables, or guys shall be fastened to or attached to any tree(s) for anchorage unless specifically authorized by the Contracting Officer. Where such special use is permitted, the Contractor shall provide effective protection to prevent damage to the tree and other land and vegetative resources. Unless specifically authorized by the Contracting Officer, no construction equipment or materials shall be placed or used within the drip line of trees shown on the drawings to be saved. No excavation or fill shall be permitted within the drip line of trees to be saved except as shown on the drawings.

3.1.2 U.S. Department of Agriculture (USDA) Quarantined Considerations

The Contractor shall thoroughly clean all construction equipment at the prior job site in a manner that ensures all residual soil is removed and that egg deposits from plant pests are not present. The Contractor shall consult with the USDA Plant Protection and Quarantine (USDA - PPQ) jurisdictional office for additional cleaning requirements that may be necessary.

3.1.3 Soil Disposal Areas on City Property

Soil disposal within the limits of construction shall be made only in those areas designated on the contract drawings. Hazardous, toxic, and radiological wastes (HTRW) shall not be disposed of onsite. Disposal operations shall be managed and controlled to prevent erosion of soil or sediment from entering nearby waters or wetlands. Disposal operations shall be developed and managed in accordance with the grading plan shown on the drawings or as approved by the Contracting Officer.

3.1.4 Disposal of Solid Wastes

Solid waste is rubbish, debris, waste materials, garbage, and other discarded solid materials (excluding clearing debris and hazardous waste as defined in following paragraphs). Solid waste shall be placed in containers and disposed on a regular schedule. All handling and disposal shall be conducted in such a way as to prevent spillage and contamination. The Contractor shall transport all solid waste off Government property and dispose in compliance with Federal, State, and local requirements.

3.1.5 Clearing Debris

Clearing debris is trees, tree stumps, tree trimmings, and shrubs, and leaves, vegetative matter, excavated natural materials (e.g., dirt, sand, and rock), and demolition products (e.g., brick, concrete, glass, and metals).

a. The Contractor shall collect trees, tree stumps, tree trimmings, shrubs, leaves, and other vegetative matter; and shall transport from Construction limits for proper disposal in compliance with City requirements. The Contractor shall segregate the matter where appropriate for proper disposal. Untreated and unpainted scrap lumber may be disposed of with this debris where appropriate.

b. Excavated natural materials shall be transported offsite for proper disposal in compliance with City requirements.

c. Demolition products shall be transported offsite for proper disposal in compliance with City requirements.

3.1.6 Disposal of Contractor Generated Hazardous Wastes

Hazardous wastes are wastes as defined in 40 CFR 261, and as defined by applicable State and local regulations. Hazardous waste generated by construction activities shall be removed from the work area and be disposed in compliance with Federal, State, and local requirements. The Contractor shall segregate hazardous waste from other materials and wastes, and shall

protect it from the weather by placing it in a safe covered location; precautionary measures against accidental spillage such as berming or other appropriate measures shall be taken. Hazardous waste shall be removed from Government property within 60 days. Hazardous waste shall not be dumped onto the ground, into storm sewers or open water courses, or into the sanitary sewer system.

3.1.7 Fuels and Lubricants

Fueling and lubrication of equipment and motor vehicles shall be conducted in a manner that affords the maximum protection against spills and evaporation. Lubricants and waste oil to be discarded shall be stored in marked corrosion-resistant containers and recycled or disposed in accordance with Federal, State, and local laws and regulations.

3.2 HISTORICAL, ARCHAEOLOGICAL, AND CULTURAL RESOURCES

3.2.1 Discovered Historic, Archaeological, and Cultural Resources

If during construction activities, items are observed that may have historic or archaeological value (e.g., Native American human remains or associated objects are discovered), such observations shall be reported immediately to the Contracting Officer so that the appropriate authorities may be notified and a determination made as to their significance and what, if any, special disposition of the finds should be made. The Contractor shall cease all activities that may result in impact to or the destruction of these resources. The Contractor shall prevent his employees from trespassing on, removing, or otherwise disturbing such resources.

3.3 PROTECTION OF WATER RESOURCES

The Contractor shall keep construction activities under surveillance, management, and control to avoid pollution of surface and ground waters.

3.3.1 Wastewater

Wastewater directly derived from construction activities shall not be discharged before being treated to remove pollutants. Wastewater shall be collected and placed in retention ponds as shown on the drawings so the suspended materials can settle. See paragraph SETTLING POND REMOVAL for disposal procedures.

3.4 PROTECTION OF AIR RESOURCES

Special management techniques as set out below shall be implemented to control air pollution by the construction activities. These techniques supplement the requirements of Federal, State, and local laws and regulations; and the safety requirements under this Contract. If any of the following techniques conflict with the requirements of Federal, State, or local laws or regulations, or safety requirements under this contract, then those requirements shall be followed in lieu of the following.

3.4.1 Particulates

Airborne particulates, including dust particles, from construction activities and processing and preparation of materials shall be controlled at all times, including weekends, holidays, and hours when work is not in progress. The Contractor shall maintain all excavations, stockpiles, haul roads, permanent and temporary access roads, plant sites, disposal sites, borrow areas, and all other work areas free from airborne dust which would cause a hazard or nuisance.

3.5 INSPECTION

If the Contracting Officer notifies the Contractor in writing of any observed noncompliance with contract requirements or Federal, State, or local laws, regulations, or permits, the Contractor shall inform the Contracting Officer of proposed corrective action and take such action to correct the noncompliance. If the Contractor fails to comply promptly, the Contracting Officer may issue an order stopping all or part of the work until satisfactory corrective action is taken. No time extensions will be granted or costs or damages allowed to the Contractor for any such suspension.

-- End of Section --

SECTION 01356A

STORM WATER POLLUTION PREVENTION MEASURES
08/96

PART 1 GENERAL

1.1 REFERENCES

The publications listed below form a part of this specification to the extent referenced. The publications are referred to in the text by basic designation only.

AMERICAN SOCIETY FOR TESTING AND MATERIALS (ASTM)

ASTM D 4439	(1997) Standard Terminology for Geosynthetics
ASTM D 4491	(1996) Water Permeability of Geotextiles by Permittivity
ASTM D 4533	(1991; R 1996) Trapezoid Tearing Strength of Geotextiles
ASTM D 4632	(1991; R 1996)) Grab Breaking Load and Elongation of Geotextiles
ASTM D 4751	(1995) Determining Apparent Opening Size of a Geotextile
ASTM D 4873	(1995) Identification, Storage, and Handling of Geosynthetic Rolls

1.2 GENERAL

The Contractor shall implement the storm water pollution prevention measures specified in this section in a manner which will meet the requirements of Section 01354 ENVIRONMENTAL PROTECTION, and the requirements of the National Pollution Discharge Elimination System (NPDES) permit attached to that Section.

1.3 SUBMITTALS

Government approval is required for submittals with a "G" designation; submittals not having a "G" designation are for information only. When used, a designation following the "G" designation identifies the office that will review the submittal for the Government. The following shall be submitted in accordance with Section 01330 SUBMITTAL PROCEDURES:

SD-07 Certificates

Mill Certificate or Affidavit; G, RE

Certificate attesting that the Contractor has met all specified requirements.

1.4 EROSION AND SEDIMENT CONTROLS

The controls and measures required by the Contractor are described below.

1.4.1 Stabilization Practices

The stabilization practices to be implemented shall include temporary seeding, mulching, geotextiles, vegetative buffer strips, erosion control matts, protection of trees, preservation of mature vegetation, etc. On his daily CQC Report, the Contractor shall record the dates when the major grading activities occur, (e.g., clearing and grubbing, excavation, embankment, and grading); when construction activities temporarily or permanently cease on a portion of the site; and when stabilization practices are initiated. Except as provided in paragraphs UNSUITABLE CONDITIONS and NO ACTIVITY FOR LESS THAN 21 DAYS, stabilization practices shall be initiated as soon as practicable, but no more than 14 days, in any portion of the site where construction activities have temporarily or permanently ceased.

1.4.1.1 Unsuitable Conditions

Where the initiation of stabilization measures by the fourteenth day after construction activity temporarily or permanently ceases is precluded by unsuitable conditions caused by the weather, stabilization practices shall be initiated as soon as practicable after conditions become suitable.

1.4.1.2 No Activity for Less Than 21 Days

Where construction activity will resume on a portion of the site within 21 days from when activities ceased (e.g., the total time period that construction activity is temporarily ceased is less than 21 days), then stabilization practices do not have to be initiated on that portion of the site by the fourteenth day after construction activity temporarily ceased.

1.4.2 Structural Practices

Structural practices shall be implemented to divert flows from exposed soils, temporarily store flows, or otherwise limit runoff and the discharge of pollutants from exposed areas of the site. Structural practices shall be implemented in a timely manner during the construction process to minimize erosion and sediment runoff. Structural practices shall include the following devices. Contractor practices as submitted.

1.4.2.1 Silt Fences

The Contractor shall provide silt fences as a temporary structural practice to minimize erosion and sediment runoff. Silt fences shall be properly installed to effectively retain sediment immediately after completing each phase of work where erosion would occur in the form of sheet and rill erosion (e.g. clearing and grubbing, excavation, embankment, and grading).

Silt fences shall be installed in the locations indicated on the drawings. Final removal of silt fence barriers shall be upon approval by the Contracting Officer.

1.4.2.2 Straw Bales

The Contractor shall provide bales of straw as a temporary structural practice to minimize erosion and sediment runoff. Bales shall be properly placed to effectively retain sediment immediately after completing each phase of work (e.g., clearing and grubbing, excavation, embankment, and grading) in each independent runoff area (e.g., after clearing and grubbing in a area between a ridge and drain, bales shall be placed as work progresses, bales shall be removed/replaced/relocated as needed for work to progress in the drainage area). Areas where straw bales are to be used are shown on the drawings. Final removal of straw bale barriers shall be upon approval by the Contracting Officer. Rows of bales of straw shall be provided as follows:

a. Along the downhill perimeter edge of all areas disturbed.

b. Along the top of the slope or top bank of drainage ditches, channels, swales, etc. that traverse disturbed areas.

c. Along the toe of all cut slopes and fill slopes of the construction areas.

d. Perpendicular to the flow in the bottom of existing drainage ditches, channels, swales, etc. that traverse disturbed areas or carry runoff from disturbed areas. Rows shall be spaced a maximum of 20 feet apart .

e. Perpendicular to the flow in the bottom of new drainage ditches, channels, and swales. Rows shall be spaced a maximum of 20 feetapart .

f. At the entrance to culverts that receive runoff from disturbed areas.

g. .

1.4.2.3 Diversion Dikes

Diversion dikes shall have a maximum channel slope of 2 percent and shall be adequately compacted to prevent failure. The minimum height measured from the top of the dike to the bottom of the channel shall be 18 inches. The minimum base width shall be 6 feet and the minimum top width shall be 2 feet. The Contractor shall ensure that the diversion dikes are not damaged by construction operations or traffic. Diversion dikes shall be located as shown on the drawings.

PART 2 PRODUCTS

2.1 COMPONENTS FOR SILT FENCES

2.1.1 Filter Fabric

The geotextile shall comply with the requirements of ASTM D 4439, and shall consist of polymeric filaments which are formed into a stable network such that filaments retain their relative positions. The filament shall consist of a long-chain synthetic polymer composed of at least 85 percent by weight of ester, propylene, or amide, and shall contain stabilizers and/or inhibitors added to the base plastic to make the filaments resistance to deterioration due to ultraviolet and heat exposure. Synthetic filter fabric shall contain ultraviolet ray inhibitors and stabilizers to provide a minimum of six months of expected usable construction life at a temperature range of 0 to 120 degrees F. The filter fabric shall meet the following requirements:

FILTER FABRIC FOR SILT SCREEN FENCE

PHYSICAL PROPERTY	TEST PROCEDURE	STRENGTH REQUIREMENT
Grab Tensile	ASTM D 4632	100 lbs. min.
Elongation (%)		30 % max.
Trapezoid Tear	ASTM D 4533	55 lbs. min.
Permittivity	ASTM D 4491	0.2 sec-1
AOS (U.S. Std Sieve)	ASTM D 4751	20-100

2.1.2 Silt Fence Stakes and Posts

The Contractor may use either wooden stakes or steel posts for fence construction. Wooden stakes utilized for silt fence construction, shall have a minimum cross section of 2 inches by 2 inches when oak is used and 4 inches by 4 inches when pine is used, and shall have a minimum length of 5 feet. Steel posts (standard "U" or "T" section) utilized for silt fence construction, shall have a minimum weight of 1.33 pounds per linear foot and a minimum length of 5 feet.

2.1.3 Mill Certificate or Affidavit

A mill certificate or affidavit shall be provided attesting that the fabric and factory seams meet chemical, physical, and manufacturing requirements specified above. The mill certificate or affidavit shall specify the actual Minimum Average Roll Values and shall identify the fabric supplied by roll identification numbers. The Contractor shall submit a mill certificate or affidavit signed by a legally authorized official from the company manufacturing the filter fabric.

2.1.4 Identification Storage and Handling

Filter fabric shall be identified, stored and handled in accordance with ASTM D 4873.

2.2 COMPONENTS FOR STRAW BALES

The straw in the bales shall be stalks from oats, wheat, rye, barley, rice,

or from grasses such as byhalia, bermuda, etc., furnished in air dry condition. The bales shall have a standard cross section of 14 inches by 18 inches. All bales shall be either wire-bound or string-tied. The Contractor may use either wooden stakes or steel posts to secure the straw bales to the ground. Wooden stakes utilized for this purpose, shall have a minimum dimensions of 2 inches x 2 inches in cross section and shall have a minimum length of 3 feet. Steel posts (standard "U" or "T" section) utilized for securing straw bales, shall have a minimum weight of 1.33 pounds per linear foot and a minimum length of 3 feet.

PART 3 EXECUTION

3.1 INSTALLATION OF SILT FENCES

Silt fences shall extend a minimum of 16 inches above the ground surface and shall not exceed 34 inches above the ground surface. Filter fabric shall be from a continuous roll cut to the length of the barrier to avoid the use of joints. When joints are unavoidable, filter fabric shall be spliced together at a support post, with a minimum 6 inch overlap, and securely sealed. A trench shall be excavated approximately 4 inches wide and 4 inches deep on the upslope side of the location of the silt fence. The 4-inch by 4-inch trench shall be backfilled and the soil compacted over the filter fabric. Silt fences shall be removed upon approval by the Contracting Officer.

3.2 INSTALLATION OF STRAW BALES

Straw bales shall be placed in a single row, lengthwise on the contour, with ends of adjacent bales tightly abutting one another. Straw bales shall be installed so that bindings are oriented around the sides rather than along the tops and bottoms of the bales in order to prevent deterioration of the bindings. The barrier shall be entrenched and backfilled. A trench shall be excavated the width of a bale and the length of the proposed barrier to a minimum depth of 4 inches. After the bales are staked and chinked (gaps filled by wedging with straw), the excavated soil shall be backfilled against the barrier. Backfill soil shall conform to the ground level on the downhill side and shall be built up to 4 inches against the uphill side of the barrier. Loose straw shall be scattered over the area immediately uphill from a straw bale barrier to increase barrier efficiency. Each bale shall be securely anchored by at least two stakes driven through the bale. The first stake or steel post in each bale shall be driven toward the previously laid bale to force the bales together. Stakes or steel pickets shall be driven a minimum 18 inches deep into the ground to securely anchor the bales.

3.3 MAINTENANCE

The Contractor shall maintain the temporary and permanent vegetation, erosion and sediment control measures, and other protective measures in good and effective operating condition by performing routine inspections to determine condition and effectiveness, by restoration of destroyed vegetative cover, and by repair of erosion and sediment control measures and other protective measures. The following procedures shall be followed to maintain the protective measures.

3.3.1 Silt Fence Maintenance

Silt fences shall be inspected in accordance with paragraph INSPECTIONS. Any required repairs shall be made promptly. Close attention shall be paid to the repair of damaged silt fence resulting from end runs and undercutting. Should the fabric on a silt fence decompose or become ineffective, and the barrier is still necessary, the fabric shall be replaced promptly. Sediment deposits shall be removed when deposits reach one-third of the height of the barrier. When a silt fence is no longer required, it shall be removed. The immediate area occupied by the fence and any sediment deposits shall be shaped to an acceptable grade. The areas disturbed by this shaping shall receive erosion control if required by Section 02270 EROSION CONTROL, paragraph be seeded in accordance with Section 300 , .

3.3.2 Straw Bale Maintenance

Straw bale barriers shall be inspected in accordance with paragraph INSPECTIONS. Close attention shall be paid to the repair of damaged bales, end runs and undercutting beneath bales. Necessary repairs to barriers or replacement of bales shall be accomplished promptly. Sediment deposits shall be removed when deposits reach one-half of the height of the barrier. Bale rows used to retain sediment shall be turned uphill at each end of each row. When a straw bale barrier is no longer required, it shall be removed. The immediate area occupied by the bales and any sediment deposits shall be shaped to an acceptable grade. The areas disturbed by this shaping shall be seeded in accordance with Section 02921 SEEDING.

3.3.3 Diversion Dike Maintenance

Diversion dikes shall be inspected in accordance with paragraph INSPECTIONS. Close attention shall be paid to the repair of damaged diversion dikes and necessary repairs shall be accomplished promptly. When diversion dikes are no longer required, they shall be shaped to an acceptable grade. The areas disturbed by this shaping shall be seeded in accordance with Section 02921 SEEDING.

3.4 INSPECTIONS

3.4.1 General

The Contractor shall inspect disturbed areas of the construction site, areas used for storage of materials that are exposed to precipitation that have not been finally stabilized, stabilization practices, structural practices, other controls, and area where vehicles exit the site at least once every seven (7) calendar days and within 24 hours of the end of any storm that produces 0.5 inches or more rainfall at the site. Where sites have been finally stabilized, such inspection shall be conducted at least once every month.

3.4.2 Inspections Details

Disturbed areas and areas used for material storage that are exposed to

precipitation shall be inspected for evidence of, or the potential for, pollutants entering the drainage system. Erosion and sediment control measures identified in the Storm Water Pollution Prevention Plan shall be observed to ensure that they are operating correctly. Discharge locations or points shall be inspected to ascertain whether erosion control measures are effective in preventing significant impacts to receiving waters. Locations where vehicles exit the site shall be inspected for evidence of offsite sediment tracking.

3.4.3 Inspection Reports

For each inspection conducted, the Contractor shall prepare a report summarizing the scope of the inspection, name(s) and qualifications of personnel making the inspection, the date(s) of the inspection, major observations relating to the implementation of the Storm Water Pollution Prevention Plan, maintenance performed, and actions taken. The report shall be furnished to the Contracting Officer within 24 hours of the inspection as a part of the Contractor's daily CQC REPORT. A copy of the inspection report shall be maintained on the job site.

3.4.4 Monthly Inspection Report and Certification Form for Erosion and Sediment Controls

On the first working day of each month the Contractor shall complete, sign, and submit the original form .

Chief,

On the first working day of each month the Contractor shall also furnish one copy of the form submitted to the to the Contracting Officer as part of the Contractor's daily CQC Report and attach a copy of the completed form to the Plan. Unless otherwise notified by the , the Contractor shall submit the Monthly Inspection Report and Certification Forms for an additional two months after the final completion of all storm water pollution prevention measures required in this contract have been implemented.

-- End of Section --

SECTION 01451

CONTRACTOR QUALITY CONTROL
04/97

PART 1 GENERAL

1.1 REFERENCES

The publications listed below form a part of this specification to the extent referenced. The publications are referred to in the text by basic designation only.

AMERICAN SOCIETY FOR TESTING AND MATERIALS (ASTM)

ASTM D 3740	(1999b) Minimum Requirements for Agencies Engaged in the Testing and/or Inspection of Soil and Rock as Used in Engineering Design and Construction
ASTM E 329	(1998a) Agencies Engaged in the Testing and/or Inspection of Materials Used in Construction

1.2 PAYMENT

Separate payment will not be made for providing and maintaining an effective Quality Control program, and all costs associated therewith shall be included in the applicable unit prices or lump-sum prices contained in the Bidding Schedule.

PART 2 PRODUCTS (Not Applicable)

PART 3 EXECUTION

3.1 GENERAL REQUIREMENTS

The Contractor is responsible for quality control and shall establish and maintain an effective quality control system in compliance with the Contract Clause titled "Inspection of Construction." The quality control system shall consist of plans, procedures, and organization necessary to produce an end product which complies with the contract requirements. The system shall cover all construction operations, both onsite and offsite, and shall be keyed to the proposed construction sequence. The site project superintendent will be held responsible for the quality of work on the job and is subject to removal by the Contracting Officer for non-compliance with the quality requirements specified in the contract. The site project superintendent in this context shall be the highest level manager responsible for the overall construction activities at the site, including quality and production. The site project superintendent shall maintain a physical presence at the site at all times, except as otherwise acceptable

to the Contracting Officer, and shall be responsible for all construction and construction related activities at the site.

3.2 QUALITY CONTROL PLAN

The Contractor shall furnish for review by the Government, not later than 20 days after receipt of notice to proceed, the Contractor Quality Control (CQC) Plan proposed to implement the requirements of the Contract Clause titled "Inspection of Construction." The plan shall identify personnel, procedures, control, instructions, tests, records, and forms to be used. The Government will consider an interim plan for the first 30 days of operation. Construction will be permitted to begin only after acceptance of the CQC Plan or acceptance of an interim plan applicable to the particular feature of work to be started. Work outside of the features of work included in an accepted interim plan will not be permitted to begin until acceptance of a CQC Plan or another interim plan containing the additional features of work to be started.

3.2.1 Content of the CQC Plan

The CQC Plan shall include, as a minimum, the following to cover all construction operations, both onsite and offsite, including work by subcontractors, fabricators, suppliers, and purchasing agents:

a. A description of the quality control organization, including a chart showing lines of authority and acknowledgment that the CQC staff shall implement the three phase control system for all aspects of the work specified. The staff shall include a CQC System Manager who shall report to the project superintendent.

b. The name, qualifications (in resume format), duties, responsibilities, and authorities of each person assigned a CQC function.

c. A copy of the letter to the CQC System Manager signed by an authorized official of the firm which describes the responsibilities and delegates sufficient authorities to adequately perform the functions of the CQC System Manager, including authority to stop work which is not in compliance with the contract. The CQC System Manager shall issue letters of direction to all other various quality control representatives outlining duties, authorities, and responsibilities. Copies of these letters shall also be furnished to the Government.

d. Procedures for scheduling, reviewing, certifying, and managing submittals, including those of subcontractors, offsite fabricators, suppliers, and purchasing agents. These procedures shall be in accordance with Section 01330 SUBMITTAL PROCEDURES.

e. Control, verification, and acceptance testing procedures for each specific test to include the test name, specification paragraph requiring test, feature of work to be tested, test frequency, and person responsible for each test. (Laboratory facilities will be approved by the Contracting Officer.)

f. Procedures for tracking preparatory, initial, and follow-up control phases and control, verification, and acceptance tests including documentation.

g. Procedures for tracking construction deficiencies from identification through acceptable corrective action. These procedures shall establish verification that identified deficiencies have been corrected.

h. Reporting procedures, including proposed reporting formats.

i. A list of the definable features of work. A definable feature of work is a task which is separate and distinct from other tasks, has separate control requirements, and may be identified by different trades or disciplines, or it may be work by the same trade in a different environment. Although each section of the specifications may generally be considered as a definable feature of work, there are frequently more than one definable features under a particular section. This list will be agreed upon during the coordination meeting.

3.2.2 Acceptance of Plan

Acceptance of the Contractor's plan is required prior to the start of construction. Acceptance is conditional and will be predicated on satisfactory performance during the construction. The Government reserves the right to require the Contractor to make changes in his CQC Plan and operations including removal of personnel, as necessary, to obtain the quality specified.

3.2.3 Notification of Changes

After acceptance of the CQC Plan, the Contractor shall notify the Contracting Officer in writing of any proposed change. Proposed changes are subject to acceptance by the Contracting Officer.

3.3 COORDINATION MEETING

After the Preconstruction Conference, before start of construction, and prior to acceptance by the Government of the CQC Plan, the Contractor shall meet with the Contracting Officer or Authorized Representative and discuss the Contractor's quality control system. During the meeting, a mutual understanding of the system details shall be developed, including the forms for recording the CQC operations, control activities, testing, administration of the system for both onsite and offsite work, and the interrelationship of Contractor's Management and control with the Government's Quality Assurance. Minutes of the meeting shall be prepared by the Government and signed by both the Contractor and the Contracting Officer. The minutes shall become a part of the contract file. There may be occasions when subsequent conferences will be called by either party to reconfirm mutual understandings and/or address deficiencies in the CQC system or procedures which may require corrective action by the Contractor.

3.4 QUALITY CONTROL ORGANIZATION

3.4.1 Personnel Requirements

The requirements for the CQC organization are a CQC System Manager and sufficient number of additional qualified personnel to ensure safety and contract compliance. The Safety and Health Manager shall receive direction and authority from the CQC System Manager and shall serve as a member of the CQC staff. Personnel identified in the technical provisions as requiring specialized skills to assure the required work is being performed properly will also be included as part of the CQC organization.The Contractor's CQC staff shall maintain a presence at the site at all times during progress of the work and have complete authority and responsibility to take any action necessary to ensure contract compliance. The CQC staff shall be subject to acceptance by the Contracting Officer. The Contractor shall provide adequate office space, filing systems and other resources as necessary to maintain an effective and fully functional CQC organization. Complete records of all letters, material submittals, show drawing submittals, schedules and all other project documentation shall be promptly furnished to the CQC organization by the Contractor. The CQC organization shall be responsible to maintain these documents and records at the site at all times, except as otherwise acceptable to the Contracting Officer.

3.4.2 CQC System Manager

The Contractor shall identify as CQC System Manager an individual within the onsite work organization who shall be responsible for overall management of CQC and have the authority to act in all CQC matters for the Contractor. The CQC System Manager shall be a graduate engineer, graduate architect, or a graduate of construction management, with a minimum of 2 years construction experience on construction similar to this contract or a construction person with a minimum of 5 years in related work. This CQC System Manager shall be on the site at all times during construction and shall be employed by the prime Contractor. The CQC System Manager shall be assigned as System Manager and shall not have other duties in addition to that of quality control. An alternate for the CQC System Manager shall be identified in the plan to serve in the event of the System Manager's absence. The requirements for the alternate shall be the same as for the designated CQC System Manager.

3.4.3 CQC Personnel

In addition to CQC personnel specified elsewhere in the contract, the Contractor shall provide as part of the CQC organization specialized personnel to assist the CQC System Manager for RMS Data Entry. These individuals shall be employed by the prime Contractor; be responsible to the CQC System Manager; be physically present at the construction site during work on their areas of responsibility; have the necessary education and/or experience to perform RMS Data Entry. These individuals may perform other duties but must be allowed sufficient time to perform their assigned quality control duties as described in the Quality Control Plan.

3.4.4 Additional Requirement

In addition to the above experience requirements the CQC System Manager shall have completed the course entitled "Construction Quality Management For Contractors". If the Contractor needs this training, it will be provided by Government personnel after award of a contract.

3.4.5 Organizational Changes

The Contractor shall maintain the CQC staff at full strength at all times. When it is necessary to make changes to the CQC staff, the Contractor shall revise the CQC Plan to reflect the changes and submit the changes to the Contracting Officer for acceptance.

3.5 SUBMITTALS

Submittals, if needed, shall be made as specified in Section 01330 SUBMITTAL PROCEDURES. The CQC organization shall be responsible for certifying that all submittals are in compliance with the contract requirements.

3.6 CONTROL

Contractor Quality Control is the means by which the Contractor ensures that the construction, to include that of subcontractors and suppliers, complies with the requirements of the contract. At least three phases of control shall be conducted by the CQC System Manager for each definable feature of work as follows:

3.6.1 Preparatory Phase

This phase shall be performed prior to beginning work on each definable feature of work, after all required plans/documents/materials are approved/accepted, and after copies are at the work site. This phase shall include:

a. A review of each paragraph of applicable specifications, reference codes, and standards. A copy of those sections of referenced codes and standards applicable to that portion of the work to be accomplished in the field shall be made available by the Contractor at the preparatory inspection. These copies shall be maintained in the field and available for use by Government personnel until final acceptance of the work.

b. A review of the contract drawings.

c. A check to assure that all materials and/or equipment have been tested, submitted, and approved.

d. Review of provisions that have been made to provide required control inspection and testing.

e. Examination of the work area to assure that all required preliminary work has been completed and is in compliance with the contract.

f. A physical examination of required materials, equipment, and sample work to assure that they are on hand, conform to approved shop drawings or submitted data, and are properly stored.

g. A review of the appropriate activity hazard analysis to assure safety requirements are met.

h. Discussion of procedures for controlling quality of the work including repetitive deficiencies. Document construction tolerances and workmanship standards for that feature of work.

i. A check to ensure that the portion of the plan for the work to be performed has been accepted by the Contracting Officer.

j. Discussion of the initial control phase.

k. The Government shall be notified at least 48 hours in advance of beginning the preparatory control phase. This phase shall include a meeting conducted by the CQC System Manager and attended by the superintendent, other CQC personnel (as applicable), and the foreman responsible for the definable feature. The results of the preparatory phase actions shall be documented by separate minutes prepared by the CQC System Manager and attached to the daily CQC report. The Contractor shall instruct applicable workers as to the acceptable level of workmanship required in order to meet contract specifications.

3.6.2 Initial Phase

This phase shall be accomplished at the beginning of a definable feature of work. The following shall be accomplished:

a. A check of work to ensure that it is in full compliance with contract requirements. Review minutes of the preparatory meeting.

b. Verify adequacy of controls to ensure full contract compliance. Verify required control inspection and testing.

c. Establish level of workmanship and verify that it meets minimum acceptable workmanship standards. Compare with required sample panels as appropriate.

d. Resolve all differences.

e. Check safety to include compliance with and upgrading of the safety plan and activity hazard analysis. Review the activity analysis with each worker.

f. The Government shall be notified at least 48 hours in advance of beginning the initial phase. Separate minutes of this phase shall be prepared by the CQC System Manager and attached to the daily CQC report. Exact location of initial phase shall be indicated for future reference and comparison with follow-up phases.

g. The initial phase should be repeated for each new crew to work onsite, or any time acceptable specified quality standards are not being met.

3.6.3 Follow-up Phase

Daily checks shall be performed to assure control activities, including control testing, are providing continued compliance with contract requirements, until completion of the particular feature of work. The checks shall be made a matter of record in the CQC documentation. Final follow-up checks shall be conducted and all deficiencies corrected prior to the start of additional features of work which may be affected by the deficient work. The Contractor shall not build upon nor conceal non-conforming work.

3.6.4 Additional Preparatory and Initial Phases

Additional preparatory and initial phases shall be conducted on the same definable features of work if: the quality of on-going work is unacceptable; if there are changes in the applicable CQC staff, onsite production supervision or work crew; if work on a definable feature is resumed after a substantial period of inactivity; or if other problems develop.

3.7 TESTS

3.7.1 Testing Procedure

The Contractor shall perform specified or required tests to verify that control measures are adequate to provide a product which conforms to contract requirements. Upon request, the Contractor shall furnish to the Government duplicate samples of test specimens for possible testing by the Government. Testing includes operation and/or acceptance tests when specified. The Contractor shall procure the services of a Corps of Engineers approved testing laboratory or establish an approved testing laboratory at the project site. The Contractor shall perform the following activities and record and provide the following data:

a. Verify that testing procedures comply with contract requirements.

b. Verify that facilities and testing equipment are available and comply with testing standards.

c. Check test instrument calibration data against certified standards.

d. Verify that recording forms and test identification control number system, including all of the test documentation requirements, have been prepared.

e. Results of all tests taken, both passing and failing tests, shall be recorded on the CQC report for the date taken. Specification paragraph reference, location where tests were taken, and the sequential control number identifying the test shall be given. If approved by the Contracting Officer, actual test reports may be

submitted later with a reference to the test number and date taken. An information copy of tests performed by an offsite or commercial test facility shall be provided directly to the Contracting Officer. Failure to submit timely test reports as stated may result in nonpayment for related work performed and disapproval of the test facility for this contract.

3.7.2 Testing Laboratories

3.7.2.1 Capability Check

The Government reserves the right to check laboratory equipment in the proposed laboratory for compliance with the standards set forth in the contract specifications and to check the laboratory technician's testing procedures and techniques. Laboratories utilized for testing soils, concrete, asphalt, and steel shall meet criteria detailed in ASTM D 3740 and ASTM E 329.

3.7.2.2 Capability Recheck

If the selected laboratory fails the capability check, the Contractor will be assessed a charge of $3,500 to reimburse the Government for each succeeding recheck of the laboratory or the checking of a subsequently selected laboratory. Such costs will be deducted from the contract amount due the Contractor.

3.7.3 Onsite Laboratory

The Government reserves the right to utilize the Contractor's control testing laboratory and equipment to make assurance tests, and to check the Contractor's testing procedures, techniques, and test results at no additional cost to the Government.

3.7.4 Furnishing or Transportation of Samples for Testing

Costs incidental to the transportation of samples or materials shall be borne by the Contractor. Samples of materials for test verification and acceptance testing by the Government shall be delivered to the Corps of Engineers Division Laboratory, f.o.b., at the following address:

For delivery by mail:

USACE Research and Development Center
ATTN: Joe Tom, CEERD-SC-E
3909 Halls Ferry Road
Vicksburg, MS 39180-6199

For other deliveries: Same as above.

Coordination for each specific test, exact delivery location, and dates will be made through the Area Office.

3.8 COMPLETION INSPECTION

3.8.1 Punch-Out Inspection

Near the end of the work, or any increment of the work established by a time stated in the Special Clause, "Commencement, Prosecution, and Completion of Work", or by the specifications, the CQC Manager shall conduct an inspection of the work. A punch list of items which do not conform to the approved drawings and specifications shall be prepared and included in the CQC documentation, as required by paragraph DOCUMENTATION. The list of deficiencies shall include the estimated date by which the deficiencies will be corrected. The CQC System Manager or staff shall make a second inspection to ascertain that all deficiencies have been corrected. Once this is accomplished, the Contractor shall notify the Government that the facility is ready for the Government Pre-Final inspection.

3.8.2 Pre-Final Inspection

The Government will perform the pre-final inspection to verify that the facility is complete and ready to be occupied. A Government Pre-Final Punch List may be developed as a result of this inspection. The Contractor's CQC System Manager shall ensure that all items on this list have been corrected before notifying the Government, so that a Final inspection with the customer can be scheduled. Any items noted on the Pre-Final inspection shall be corrected in a timely manner. These inspections and any deficiency corrections required by this paragraph shall be accomplished within the time slated for completion of the entire work or any particular increment of the work if the project is divided into increments by separate completion dates.

3.8.3 Final Acceptance Inspection

The Contractor's Quality Control Inspection personnel, plus the superintendent or other primary management person, and the Contracting Officer's Representative shall be in attendance at the final acceptance inspection. The final acceptance inspection will be formally scheduled by the Contracting Officer based upon results of the Pre-Final inspection. Notice shall be given to the Contracting Officer at least 14 days prior to the final acceptance inspection and shall include the Contractor's assurance that all specific items previously identified to the Contractor as being unacceptable, along with all remaining work performed under the contract, will be complete and acceptable by the date scheduled for the final acceptance inspection. Failure of the Contractor to have all contract work acceptably complete for this inspection will be cause for the Contracting Officer to bill the Contractor for the Government's additional inspection cost in accordance with the contract clause titled "Inspection of Construction".

3.8.4 Inspections

The Contractor shall invite personnel from KCMO to participate in all inspection phases of the work, particularly inspection of the bridge and the intersection modifications.

3.9 DOCUMENTATION

The Contractor shall maintain current records providing factual evidence that required quality control activities and/or tests have been performed. These records shall include the work of subcontractors and suppliers and shall be on an acceptable form that includes, as a minimum, the following information:

a. Contractor/subcontractor and their area of responsibility.

b. Operating plant/equipment with hours worked, idle, or down for repair.

c. Work performed each day, giving location, description, and by whom. When Network Analysis (NAS) is used, identify each phase of work performed each day by NAS activity number.

d. Test and/or control activities performed with results and references to specifications/drawings requirements. The control phase shall be identified (Preparatory, Initial, Follow-up). List of deficiencies noted, along with corrective action.

e. Quantity of materials received at the site with statement as to acceptability, storage, and reference to specifications/drawings requirements.

f. Submittals and deliverables reviewed, with contract reference, by whom, and action taken.

g. Offsite surveillance activities, including actions taken.

h. Job safety evaluations stating what was checked, results, and instructions or corrective actions.

i. Instructions given/received and conflicts in plans and/or specifications.

j. Contractor's verification statement.

These records shall indicate a description of trades working on the project; the number of personnel working; weather conditions encountered; and any delays encountered. These records shall cover both conforming and deficient features and shall include a statement that equipment and materials incorporated in the work and workmanship comply with the contract. The original and one copy of these records in report form shall be furnished to the Government daily within 24 hours after the date covered by the report, except that reports need not be submitted for days on which no work is performed. As a minimum, one report shall be prepared and submitted for every 7 days of no work and on the last day of a no work period. All calendar days shall be accounted for throughout the life of the contract. The first report following a day of no work shall be for that day only. Reports shall be signed and dated by the CQC System Manager. The report from the CQC System Manager shall include copies of test reports and copies of reports prepared by all subordinate quality control personnel.

3.10 SAMPLE FORMS

Sample forms enclosed at the end of this section.

3.11 NOTIFICATION OF NONCOMPLIANCE

The Contracting Officer will notify the Contractor of any detected noncompliance with the foregoing requirements. The Contractor shall take immediate corrective action after receipt of such notice. Such notice, when delivered to the Contractor at the work site, shall be deemed sufficient for the purpose of notification. If the Contractor fails or refuses to comply promptly, the Contracting Officer may issue an order stopping all or part of the work until satisfactory corrective action has been taken. No part of the time lost due to such stop orders shall be made the subject of claim for extension of time or for excess costs or damages by the Contractor.

3.12 IMPLEMENTATION OF GOVERNMENT RESIDENT MANAGEMENT SYSTEM FOR CONTRACTOR QUALITY CONTROL OF CONTRACT

3.12.1 Government-Furnished CQC Programming Module

The Contractor shall utilize a Government-furnished CQC Programming Module. Note: A Hewlett-Packard LaserJet 4 printer (or better) is required to print the reports from this program. The Module includes a Daily CQC Reporting System form which must also be used. This form may be in addition to other Contractor desired reporting forms. However, all other such reporting forms shall be consolidated into this one Government-specified Daily CQC Report Form. The Contractor will also be required to complete Government-Furnished Module elements which include, but are not limited to, Prime Contractor staffing; letter-codes; planned cumulative progress earnings; subcontractor information showing trade, name, address, point of contact, and insurance expiration dates; definable features of work; pay activity and activity information; required Quality Control tests tied to individual activities; planned User Schooling tied to specific specification paragraphs and contractor activities; Installed Property Listing; Transfer Property Listing; and submittal information relating to specification section, description, activity number, review period and expected procurement period. The sum of all activity values shall equal the contract amount, and all Bid Items, Options and Additives (if applicable) shall be separately identified, in accordance with the "Bid Schedule". Bid Items may include multiple activities, but activities may only be assigned to one such Bid Item. This Module shall be completed to the satisfaction of the Contracting Officer prior to any contract payment (except for Bonds, Insurance and/or Mobilization, as approved by the Contracting Officer) and shall be updated as required.

3.12.2 Quality Assurance Comments

During the course of the contract, the Contractor will receive various Quality Assurance comments from the Government that will reflect corrections needed to Contractor activities or reflect outstanding or future items needing the attention of the Contractor. The Contractor will

acknowledge receipt of these comments by specific number reference on his Daily CQC Report, and will also reflect on his Daily CQC Report when these items are specifically completed or corrected to permit Government verification.

3.12.3 Contractor's Scheduling System

The Contractor's scheduling system shall include, as specific and separate activities, all Preparatory Phase Meetings (inspections); all O&M Manuals; and all Test Plans of electrical and mechanical equipment or systems that require validation testing or instructions to Government representatives.

-- End of Section --

SECTION 01500

TEMPORARY CONSTRUCTION FACILITIES
02/97

PART 1 GENERAL

1.1 GENERAL REQUIREMENTS

1.1.1 Site Plan

The Contractor shall prepare a site plan indicating the proposed location and dimensions of any area to be fenced and used by the Contractor, the number of trailers to be used, avenues of ingress/egress to the fenced area and details of the fence installation. Any areas which may have to be graveled to prevent the tracking of mud shall also be identified. The Contractor shall also indicate if the use of a supplemental or other staging area is desired.

1.2 AVAILABILITY AND USE OF UTILITY SERVICES

1.2.1 Payment for Utility Services

The Government will make all reasonably required utilities available to the Contractor from existing outlets and supplies, as specified in the contract. Unless otherwise provided in the contract, the amount of each utility service consumed shall be charged to or paid for by the Contractor at prevailing rates charged to the Government or, where the utility is produced by the Government, at reasonable rates determined by the Contracting Officer. The Contractor shall carefully conserve any utilities furnished without charge.

1.2.2 Meters and Temporary Connections

The Contractor, at its expense and in a manner satisfactory to the Contracting Officer, shall provide and maintain necessary temporary connections, distribution lines, and meters required to measure the amount of each utility used for the purpose of determining charges. The Contractor shall notify the Contracting Officer, in writing, 5 working days before final electrical connection is desired so that a utilities contract can be established. The Contractor shall provide a meter and make the final hot connection.

1.2.3 Advance Deposit

An advance deposit for utilities consisting of an estimated month's usage or a minimum of $50.00 will be required. The last monthly bills for the fiscal year will normally be offset by the deposit and adjustments will be billed or returned as appropriate. Services to be rendered for the next fiscal year, beginning 1 October, will require a new deposit. Notification of the due date for this deposit will be mailed to the Contractor prior to

the end of the current fiscal year.

1.2.4 Final Meter Reading

Before completion of the work and final acceptance of the work by the Government, the Contractor shall notify the Contracting Officer, in writing, 5 working days before termination is desired. The Government will take a final meter reading, disconnect service, and remove the meters. The Contractor shall then remove all the temporary distribution lines, meter bases, and associated paraphernalia. The Contractor shall pay all outstanding utility bills before final acceptance of the work by the Government.

1.2.5 Sanitation

The Contractor shall provide and maintain within the construction area minimum field-type sanitary facilities approved by the Contracting Officer. Government toilet facilities will not be available to Contractor's personnel.

1.2.6 Telephone

The Contractor shall make arrangements and pay all costs for telephone facilities desired.

1.3 BULLETIN BOARD, PROJECT SIGN, AND PROJECT SAFETY SIGN

1.3.1 Bulletin Board

Immediately upon beginning of work, the Contractor shall provide a weatherproof glass-covered bulletin board not less than 36 by 48 inches in size for displaying the Equal Employment Opportunity poster, a copy of the wage decision contained in the contract, Wage Rate Information poster, and other information approved by the Contracting Officer. The bulletin board shall be located at the project site in a conspicuous place easily accessible to all employees, as approved by the Contracting Officer. Legible copies of the aforementioned data shall be displayed until work is completed. Upon completion of work the bulletin board shall be removed by and remain the property of the Contractor.

1.3.2 Project and Safety Signs

The requirements for the signs, their content, and location shall be as shown on the drawings. The signs shall be erected within 15 days after receipt of the notice to proceed. The data required by the safety sign shall be corrected daily, with light colored metallic or non-metallic numerals. Upon completion of the project, the signs shall be removed from the site.

1.4 PROTECTION AND MAINTENANCE OF TRAFFIC

During construction the Contractor shall provide access and temporary

relocated roads as necessary to maintain traffic. The Contractor shall maintain and protect traffic on all affected roads during the construction period except as otherwise specifically directed by the Contracting Officer. Measures for the protection and diversion of traffic, including the provision of watchmen and flagmen, erection of barricades, placing of lights around and in front of equipment and the work, and the erection and maintenance of adequate warning, danger, and direction signs, shall be as required by the State and local authorities having jurisdiction. The traveling public shall be protected from damage to person and property. The Contractor's traffic on roads selected for hauling material to and from the site shall interfere as little as possible with public traffic. The Contractor shall investigate the adequacy of existing roads and the allowable load limit on these roads. The Contractor shall be responsible for the repair of any damage to roads caused by construction operations.

1.4.1 Haul Roads

The Contractor shall, at its own expense, construct access and haul roads necessary for proper prosecution of the work under this contract. Haul roads shall be constructed with suitable grades and widths; sharp curves, blind corners, and dangerous cross traffic shall be avoided. The Contractor shall provide necessary lighting, signs, barricades, and distinctive markings for the safe movement of traffic. The method of dust control, although optional, shall be adequate to ensure safe operation at all times. Location, grade, width, and alignment of construction and hauling roads shall be subject to approval by the Contracting Officer. Lighting shall be adequate to assure full and clear visibility for full width of haul road and work areas during any night work operations. Upon completion of the work, haul roads designated by the Contracting Officer shall be removed.

1.4.2 Barricades

The Contractor shall erect and maintain temporary barricades to limit public access to hazardous areas. Such barricades shall be required whenever safe public access to paved areas such as roads, parking areas or sidewalks is prevented by construction activities or as otherwise necessary to ensure the safety of both pedestrian and vehicular traffic. Barricades shall be securely placed, clearly visible with adequate illumination to provide sufficient visual warning of the hazard during both day and night.

1.5 CONTRACTOR'S TEMPORARY FACILITIES

1.5.1 Administrative Field Offices

The Contractor shall provide and maintain administrative field office facilities within the construction area at the designated site. Government office and warehouse facilities will not be available to the Contractor's personnel.

1.5.2 Storage Area

The Contractor shall construct a temporary 6 foot high chain link fence with triple barbed wire around trailers and materials. The fence shall

include plastic strip inserts, colored green, so that visibility through the fence is obstructed. Fence posts may be driven, in lieu of concrete bases, where soil conditions permit. Trailers, materials, or equipment shall not be placed or stored outside the fenced area unless such trailers, materials, or equipment are assigned a separate and distinct storage area by the Contracting Officer away from the vicinity of the construction site. Trailers, equipment, or materials shall not be open to public view with the exception of those items which are in support of ongoing work on any given day. Materials shall not be stockpiled outside the fence in preparation for the next day's work. Mobile equipment, such as tractors, wheeled lifting equipment, cranes, trucks, and like equipment, shall be parked within the fenced area at the end of each work day.

1.5.3 Supplemental Storage Area

Upon Contractor's request, the Contracting Officer will designate another or supplemental area for the Contractor's use and storage of trailers, equipment, and materials. This area may not be in close proximity of the construction site. Fencing of materials or equipment will not be required at this site; however, the Contractor shall be responsible for cleanliness and orderliness of the area used and for the security of any material or equipment stored in this area. Utilities will not be provided to this area by the Government.

1.5.4 Appearance of Trailers

Trailers utilized by the Contractor for administrative or material storage purposes shall present a clean and neat exterior appearance and shall be in a state of good repair. Trailers which, in the opinion of the Contracting Officer, require exterior painting or maintenance will not be allowed on the military property.

1.5.5 Maintenance of Storage Area

Fencing shall be kept in a state of good repair and proper alignment. Should the Contractor elect to traverse, with construction equipment or other vehicles, grassed or unpaved areas which are not established roadways, such areas shall be covered with a layer of gravel as necessary to prevent rutting and the tracking of mud onto paved or established roadways; gravel gradation shall be at the Contractor's discretion. Grass located within the boundaries of the construction site shall be mowed for the duration of the project. Grass and vegetation along fences, buildings, under trailers, and in areas not accessible to mowers shall be edged or trimmed neatly.

1.5.6 New Building

In the event a new building is constructed for the temporary project field office, it shall be a minimum 12 feet in width, 16 feet in length and have a minimum of 7 feet headroom. It shall be equipped with approved electrical wiring, at least one double convenience outlet and the required switches and fuses to provide 110-120 volt power. It shall be provided with a work table with stool, desk with chair, two additional chairs, and one legal size file cabinet that can be locked. The building shall be

waterproof, shall be supplied with heater, shall have a minimum of two doors, electric lights, a telephone, a battery operated smoke detector alarm, a sufficient number of adjustable windows for adequate light and ventilation, and a supply of approved drinking water. Approved sanitary facilities shall be furnished. The windows and doors shall be screened and the doors provided with dead bolt type locking devices or a padlock and heavy duty hasp bolted to the door. Door hinge pins shall be non-removable. The windows shall be arranged to open and to be securely fastened from the inside. Glass panels in windows shall be protected by bars or heavy mesh screens to prevent easy access to the building through these panels. In warm weather, air conditioning capable of maintaining the office at 50 percent relative humidity and a room temperature 20 degrees F below the outside temperature when the outside temperature is 95 degrees F, shall be furnished. Any new building erected for a temporary field office shall be maintained by the Contractor during the life of the contract and upon completion and acceptance of the work shall become the property of the Contractor and shall be removed from the site. All charges for telephone service for the temporary field office shall be borne by the Contractor, including long distance charges up to a maximum of $75.00 per month.

1.5.7 Security Provisions

Adequate outside security lighting shall be provided at the Contractor's and the Government's temporary facilities. The Contractor shall be responsible for the security of its own equipment; in addition, the Contractor shall notify the appropriate law enforcement agency requesting periodic security checks of the temporary project field offices. The Contractor shall provide the Government's Temporary Facilities with a monitored / reporting alarm system, security patrols, and locksets, at no additional expense to the Government.

1.6 GOVERNMENT FIELD OFFICE

The Contractor shall furnish a temporary office facility a minimum of 1000 square feet of floor space that will accommodate and support the equipment and requirements below. It shall be located where directed and shall be reserved for Government and/or City personnel only. The temporary government office facility, including the parking area shall have an 8-foot security fence with triple barbed wire, and outdoor security lighting. Parking shall include six (6) off-street parking spaces adjacent to the temporary office. Cooled bottled drinking water facilities, adequate diffused, fluorescent lighting, local commercial telephone service, air conditioning, heating equipment, and a toilet room with water closet and lavatory with sewage facilities shall be furnished and maintained by the Contractor. All windows shall have operable windows and blinds. The office facility shall be divided to include a minimum of four (4) private office areas, one (1) private conference room, one (1) communication/electrical closet, and a common area that will accommodate one (1) additional workstation, copy machine, fax machine, and common storage and file space. Private offices and conference room shall include entry doors. Conference room shall be sized and equipped to provide a conference table and chairs to accommodate ten (10) people. Each office, conference room and workstation shall have electrical outlets, a dedicated phone line and computer connection. Offices and workstations shall include a desk, chair,

ten linear feet of shelving located where directed, and one legal size filing cabinet with four drawers. Four additional 4-drawer file cabinets shall also be included in the common area. A plan table will be provided behind each desk as a work surface for full size drawings. The common area will include a telephone/data connections and power to support the required fax, printer and copy machine. Other equipment that shall be provided includes the following:

· Four (4), 3ft x 4ft white marker boards to be installed where directed;
· Five (5) coat hooks to be installed where directed;
· Four (4) plan racks;
· One full size drafting table;
· Five (5) separate telephone lines, four (4) for voice and one for fax;
· One (1) T-1 data circuit;
· Four telephone instruments each capable of using the three voice telephone lines;
· Three (3) Dell OptiPlex GX240, Pentium 4, 1.7 GHz, 256K Cache, with PCI riser personal computers or equal with the following minimum capabilities:
· 4-PCI slots;
· 512MB, Non ECC, PC133 SDRAM;
· Tower case;
· 3.5 inch, 1.44MG floppy drive;
· 40GB, EIDE, 7200 RPM, ATA/100 hard drive;
· 48X internal EIDE CD-ROM;
· DVD-CDRW combo drive with decoder for Windows 2000;
· On-board enhance IDE/IO adapter 2F/4H, 2-Hi Speed Serial/1 BI-dir EPP Par. Port;
· 32MB, ATI, Rage Ultra 128, Video Card;
· Integrated Sound Blaster Compatible AC97 Sound Card;
· Harman/Kardon 19.5 speakers or equal;
· 104 enhanced keyboard;
· MS Windows 2000 Professional on CD-ROM and installed on CPU's;
· MS Office Pro 2000 on CD-ROM and installed on CPU's;
· 3-button PS/2 mouse and mouse pad;
· 10/100, Network Interface Card (NIC)
· 19" .26mm 1289x1024 flat screen computer monitor;
· On-site warranty for the duration of the contract;
· FCC Certified, Novell certified, Windows NT certified, Year 2000 compliant;
· One (1) Dell OptiPlex GX240, Pentium 4 personal computer for use as a'server' with the following capability:
· 4-PCI slots;
· 512MB, Non ECC, PC133 SDRAM;
· Tower case;
· 3.5 inch, 1.44MG floppy drive;
· 40GB, EIDE, 7200 RPM, ATA/100 hard drive;
· 48X internal EIDE CD-ROM;
· On-board enhance IDE/IO adapter 2F/4H, 2-Hi Speed Serial/1 BI-dir EPP Par. Port;
· 32MB, ATI, Rage Ultra 128, Video Card;
· 104 enhanced keyboard;
· 3-button PS/2 mouse and mouse pad;
· 10/100, Network Interface Card (NIC)
· 17" .26mm 1289x1024 computer monitor;
· On-site warranty for the duration of the contract;

· FCC Certified, , Windows NT certified, Year 2000 compliant;
· MS Windows 2000 Server on on CD-ROM and installed on CPU;
· Internal tape drive with Windows 2000 compatible backup software.
· APC Battery Backup device with PowerChute software for server that will provide 15 minutes of backup power in the event of a power failure;
· Cisco 1710 router and any other ancillary equipment necessary for connection of the T-1 line to the network;
· Cisco 2950 12-port switch sufficient for print sharing and file sharing;
· An established LAN within the Government facility to have a minimum of six drops at locations designated by the Government;
· One laser printer with NIC, HP laser jet 8000N or equivalent capable of making 11 inch x 17 inch documents;
· One copy of the NAS scheduling software that the Contractor intends to use to manage the project;
· One plain paper FAX machine;
· One copier with the following capabilities: Document feeder, collating, magnification & reduction, duplex copies, sorting, stapling, 11inch x 17inch copies;
· Monitored (reporting) security alarm system;
· Four (4) handheld cellular telephones, Motorola Model I700+ or equal with service for the duration of the project. Service shall be digital cellular iDEN technology with integrated digital push to talk 2-way radio coverage within Missouri and Kansas.
· One (1) Digital camera, Sony model DSC-P5, 3.34 megapixel with 32Mb Memory Stick, Model MSA-32A and two (2) Sony Memory stick Floppy Disk Adapters, Model MSAC-FD2MA.

Maintenance service contract for the computers, printer, router, hub, fax machine and copier shall be provided for the duration of the contract. Toner for the printer and copier shall be provided for the duration of the project. Building entrance doors shall be equipped with a substantial lock with five (5) keys. Janitorial service shall be provided that includes trash removal, sweeping twice weekly, mopping and dusting weekly, window washing monthly, toilet tissue, hand towels, liquid hand soap. The contractor will not be liable for Government long-distance telephone calls. The Contractor shall provide janitorial service, heating, air conditioning, T-1 data communication service, local telephone service, electricity, water, sewerage, office equipment maintenance and monitored security system at no additional cost to the Government for the duration of the project. The facility will be set up and completely operational with all items listed above functional within thirty days after the Notice to Proceed. The entire facility including all furniture, office equipment, camera, computers, printers, copier and communications equipment will remain the property of the Contractor and shall be removed from the site after completion of the work.

1.7 PLANT COMMUNICATION

Whenever the Contractor has the individual elements of its plant so located that operation by normal voice between these elements is not satisfactory, the Contractor shall install a satisfactory means of communication, such as telephone or other suitable devices. The devices shall be made available

for use by Government personnel.

1.8 TEMPORARY PROJECT SAFETY FENCING

As soon as practicable, but not later than 15 days after the date established for commencement of work, the Contractor shall furnish and erect temporary project safety fencing at the work site. The safety fencing shall be a high visibility orange colored, high density polyethylene grid or approved equal, a minimum of 42 inches high, supported and tightly secured to steel posts located on maximum 10 foot centers, constructed at the approved location. The safety fencing shall be maintained by the Contractor during the life of the contract and, upon completion and acceptance of the work, shall become the property of the Contractor and shall be removed from the work site.

1.9 CLEANUP

Construction debris, waste materials, packaging material and the like shall be removed from the work site daily. Any dirt or mud which is tracked onto paved or surfaced roadways shall be cleaned away. Materials resulting from demolition activities which are salvageable shall be stored within the fenced area described above or at the supplemental storage area. Stored material not in trailers, whether new or salvaged, shall be neatly stacked when stored.

1.10 RESTORATION OF STORAGE AREA

Upon completion of the project and after removal of trailers, materials, and equipment from within the fenced area, the fence shall be removed and will become the property of the Contractor. Areas used by the Contractor for the storage of equipment or material, or other use, shall be restored to the original or better condition. Gravel used to traverse grassed areas shall be removed and the area restored to its original condition, including top soil and seeding as necessary.

-- End of Section --

The graphic format for this 4'x 6' sign panel follows the legend guidelines and layout as specified below. The large 4'x 4' section of panel on the right is to be white with black legend. The 2'x 4' section of the sign on the left with with the full Corps signature (reverse version) is to be screen printed Communications Red on the White background.

This sign is to be placed with the Safety Performance Sign (See Fig. 2).

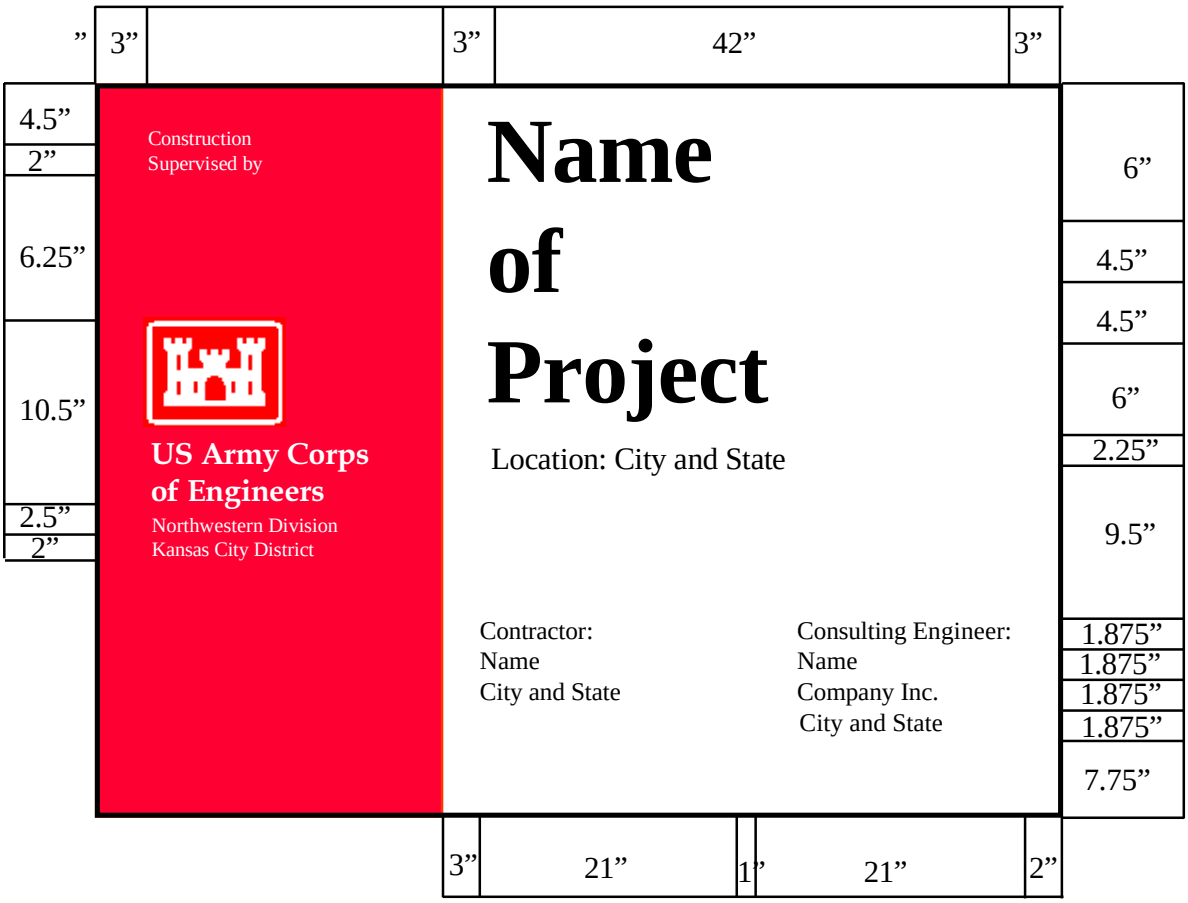

Legend Group 1: One to two-line description of Corps relationship to project
Color White
Typeface 1.25" Helvehca Regular
Maximum line lenth: 19"

Legend Group 2: Division\ District Name Placed below 10.5" Reverse Signature (6" Castle).
Color: White
Typeface: 1.25" Helvetica Regular

Legend Group 3: One- to three-line project title legend describes the work beging done under this contract.
Color: Black
Typeface: 3" Helvetica Bold
Maximum line length: 42"

Legend Group 4: One- to two-line identification of project or facility (civil works) or name of sponsoring department (military).
Color: Black
Typeface: 1.5" Helveticia Regular
Maximum line length: 42"

Cross-align the first line of Legend Group 4 with the first line of the Corps Signature (US Army Corps) as shown.

Legend Groups 5a-b: One- to five-line identification of prime contractors including: type (arcthitect, general contractor, etc.), corporate or firm name, city, state. Use of Legend Group 5 is optional.
Color: Black
Typeface: 1.25" Helvetica Regular
Maximum line length: 21"

All typography is flush left and rag right, upper and lower case with initial capitals only as shown. Letter- and word-spacing to follow Corps standards

Sign Type	Legend Size	Panel Size	Post Size	Specification Code	Mounting Height	Color Bkg/Lgd
CID-01	Various	4' x 6'	4" x 4"	HDO-3	48"	WH-RD/BK

CONSTRUCTION SIGN (CORPS OF ENGINEERS DESIGN)
(Use with Fig 2)

Fig. 1

SAFETY PERFORMANCE SIGN

Each contractor's safety record is to be posted on Corps managed or supervised construction projects and mounted with the construction project identification sign.

The graphic format, color, size and typefaces used on the sign are to be reproduced exactly as specified below. The title with First Aid logo in the top section of the sign and the performance record captions are standard for all signs of the type. Legend Groups 2 and 3 below identify the project and the contractor and are to be placed on the sign as shown.

Safety record numbers are mounted on individual metal plates and are screw mounted to the background to allow for daily revisions to posted safety performance record.

Legend Group 1: Standard two-line title "Safety is a Job requirement" with (8 od.) Safety Green First Aid logo.
Color: to match PMS 347
Typeface: 3" Helvetica Bold
Color: Black

Legend Group 2: One to two-line project title legend describes the work being done under this contract and name of host project.
Color: Black
Typeface: 1.5" Helvetica Regular
Maximum line length: 42"

Legend Group 3: One to two-line identification; name of prime contractor and city, state address.
Color: Black
Typeface: 1.5" Helvetica Regular
Maximum line length: 42"

Legend Group 4: Standard safety record captions as shown.
Color: Black
Typeface: 12.5" Helvetica Regular

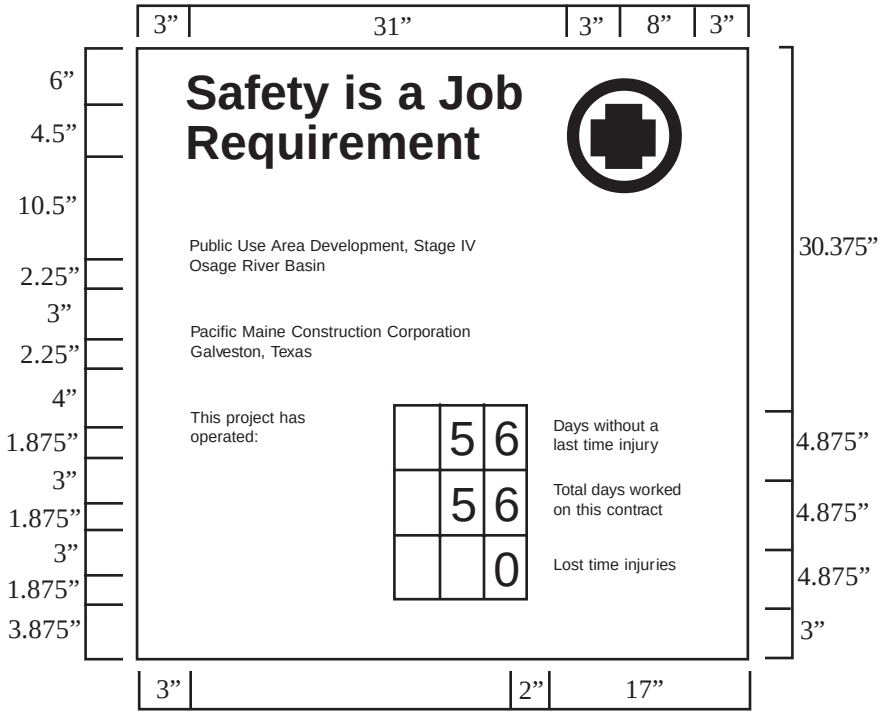

Sign Type	Legend Size	Panel Size	Post Size	Specification Code	Mounting Height	Color Bkg/Lgd
CID-02	Various	4' X 4'	4" X 4"	HDO-3	48"	WH/BK - GR

Replaceable numbers are to be mounted on white .060 aluminum plates and screw-mounted to background.
Color: Black
Typeface: 3" Helvetica Regular
Plate size: 2.5" X 5"

All typography is flush left and rag right. Upper and lower case with initial capitals only as shown. Letter - and word - spacing to follow Corps standards.

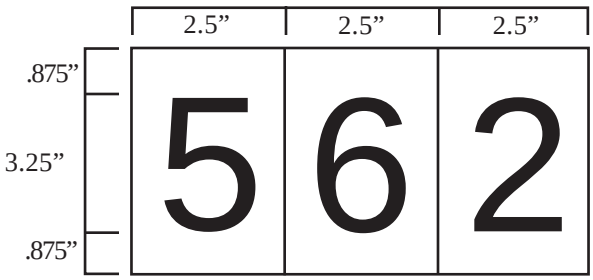

Fig. 2

SECTION 01550

HYDROLOGY

1. GENERAL: Brush Creek flows were monitored by a stream gage installed on the Main Street bridge. Stage or water surface elevation data were collected from October 1972 through September 1978. The largest flood during this period occurred on 12 September 1977. About 5 a.m. a peak of 5,800 c.f.s. was recorded from rain falling after midnight. At 8 p.m. a second storm occurred which caused Brush creek flow to increase from less than 100 c.f.s. to a peak of 19,230 c.f.s. two hours later. Twelve hours later flows had receded to about 1,000 c.f.s. and 24 hours after the peak, flows were again less than 100 c.f.s. The September 1977 flood was the largest and most damaging flood that could be found in any newspaper or other record available. However, a flood which was estimated by Black & Veatch Consulting Engineers for the J.C. Nichols Company to have a peak discharge of 17,360 c.f.s. occurred in 1906.

2. FLOOD DURATION:

2.1 High flows: Mean Daily Discharges data for six years, 1973 through 1978 (2,191 days), were used to evaluate the persistence of high and low flows. The average daily (mean daily) flow was used which in the case of Brush Creek is only a fraction of the peak experienced if a peak occurred in that day. For example, the mean daily flow for 12 September 1977 was 2,190 c.f.s. while two distinct peaks much larger actually occurred. Table 1 gives flow duration data for mean daily flow. The table shows the flow expected for various durations. The probable errors within the table increases as the duration period increases and as the annual exceedence probability decreases.

Table 1. HIGH FLOW DISCHARGE - DURATION PROBABILITY

ANNUAL EXCEEDENCE PROBABILITY	AVERAGE RECURRENCE INTERVAL (YRS)	AVERAGE DISCHARGE IN C.F.S.*				
		1 DAY	3 DAYS	7 DAYS	15 DAYS	30 DAYS
.99	1.01	48	37	18	13	10
.50	2.00	424	160	97	52	35
.20	5.00	1,047	452	250	127	77
.10	10.00	1,723	889	443	222	127
.04	25.00	2,988	2,028	869	435	230
.02	50.00	4,313	3,668	1,389	701	353
.01	100.00	6,045	6,509	2,169	1,109	532

*The short streamflow record reduces the accuracy of statistical flow duration analyses. Values in this table may vary + of - 40 percent from the true value. Values at each frequency should decrease for each successive longer duration.

For Low Flow Duration results, our investigation of the same six years of data shows that for all durations up to 120 days and frequencies on the average of once-in-two-years or less frequent, flows will be 2.1 c.f.s. or smaller. On an

annual frequency (1.02 year return interval) one 14 day period may average less than one c.f.s. Annually, one 60, 90, or 120 day period may average less than 10.6 c.f.s.

The period of record (2,191 days) flows show that all mean daily flows are classified as follows:

Table 2. FLOW EXCEEDENCE VALUES

NO. OF DAYS	FLOW VALUE EXCEEDED
202	12 cfs
99	31 cfs
41	81 cfs
28	110 cfs
12	210 cfs
6	400 cfs
2	770 cfs (but not greater than 2,190)

* * * * * *

SECTION 01780

CLOSEOUT SUBMITTALS
11/99

PART 1 GENERAL

1.1 SUBMITTALS

Government approval is required for submittals with a **"GA"** designation; submittals having a **"FIO"** designation are for information only. **When used, a designation following the "GA" designation identifies the office that will review the submittal for the Government.** The following shall be submitted in accordance with Section 01330 SUBMITTAL PROCEDURES.

SD-11 Records

As-Built Drawings; GA-RE.

Drawings showing final as-built conditions of the project. The final CADD as-built drawings shall consist of one set of electronic CADD drawing files in the specified format and three sets of the approved red-line as-built drawings.

Warranty Management Plan; GA-RE.

One set of the warranty management plan containing information relevant to the warranty of materials and equipment incorporated into the construction project, including the starting date of warranty of construction. The Contractor shall furnish with each warranty the name, address, and telephone number of each of the guarantor's representatives nearest to the project location.

Warranty Tags; GA-RE.

Two record copies of the warranty tags showing the layout and design.

Final Clean-Up; GA-RE.

Two copies of the listing of completed final clean-up items.

1.2 PROJECT RECORD DOCUMENTS

1.2.1 As-Built Drawings

This paragraph covers as-built drawings complete, as a requirement of the contract. The terms "drawings," "contract drawings," "drawing files," "working as-built drawings" and "final as-built drawings" refer to contract drawings which are revised to be used for final as-built drawings.

1.2.1.1 Government Furnished Materials

One set of electronic CADD files in the specified software and format revised to reflect all bid amendments will be provided by the Government at the preconstruction conference for projects requiring CADD file as-built drawings.

1.2.1.2 Monthly As-Built Review Meeting

A monthly as-built review meeting will be conducted during the construction project. Each member of the construction team will attend the meeting and provide information or documentation as required. The meeting will be conducted in a mutually agreed upon location. To minimize difficulty in coordinating schedules, efforts will be made for a standing meeting in the same location, at the same time, and on the same day of the week each month.

a. The Government will chair the meeting and serve as the information conduit.

b. The Government will provide an agenda for the meeting.

c. The Contractor shall bring two updated CDs (or diskettes) to the meeting.

d. The Contractor shall bring current redline drawings to the meeting.

e. The Contractor shall display updated CADD as-built files on screen, demonstrating that CADD files match features on redline drawings, and making changes if necessary.

f. The Contractor shall leave one CD (or diskette) with the Government. The Contractor shall have updated this copy to include any changes made during the meeting.

1.2.1.3 Exterior Utility Systems

At intervals of 30 days from the time work is begun on new utility systems or on revising existing systems, as-built CADD files shall be submitted showing the condition of new and altered utility systems. The as-built exterior utility drawings shall show locations and elevations of all underground new and existing utilities encountered, including dimensions from permanent structures and/or survey locations. **The submittal requirements for as-built utility drawings shall be shown as separate activities on the Contractor-prepared network analysis.**

1.2.1.4 Working As-Built and Final As-Built Drawings

The Contractor shall revise three (3) sets of paper drawings by red-line process to show the as-built conditions during the prosecution of the project. These working as-built marked drawings shall be kept current on a daily basis and at least one set shall be available on the jobsite at all times. Changes from the contract plans which are made in the work or additional information which might be uncovered in the course of construction shall be accurately and neatly recorded as they occur by means of details and notes. **In addition, the Contractor shall indicate on the as-built drawings the brand-name, description, location, and quantity of any and all materials used which contain asbestos.**Final as-built drawings shall be prepared after the completion of each definable feature of work as listed in the Contractor Quality Control Plan (Foundations, Utilities, Structural Steel, etc., as appropriate for the project). The working as-built marked prints and final as-built drawings will be jointly reviewed

for accuracy and completeness by the Contracting Officer and the Contractor prior to submission of each monthly pay estimate. If the Contractor fails to maintain the working and final as-built drawings as specified herein, the Contracting Officer will deduct from the monthly progress payment an amount representing the estimated cost of maintaining the as-built drawings. This monthly deduction will continue until an agreement can be reached between the Contracting Officer and the Contractor regarding the accuracy and completeness of updated drawings. The working and final as-built drawings shall show, but shall not be limited to, the following information:

a. The actual location, kinds and sizes of all sub-surface utility lines. In order that the location of these lines and appurtenances may be determined in the event the surface openings or indicators become covered over or obscured, the as-built drawings shall show, by offset dimensions to two permanently fixed surface features, the end of each run including each change in direction. Valves, splice boxes and similar appurtenances shall be located by dimensioning along the utility run from a reference point. The average depth below the surface of each run shall also be recorded.

b. The location and dimensions of any changes within the building structure.

c. Correct grade, elevations, cross section, or alignment of roads, earthwork, structures or utilities if any changes were made from contract plans.

d. Changes in details of design or additional information obtained from working drawings specified to be prepared and/or furnished by the Contractor; including but not limited to fabrication, erection, installation plans and placing details, pipe sizes, insulation material, dimensions of equipment foundations, etc.

e. The topography, invert elevations and grades of drainage installed or affected as part of the project construction.

f. Changes or modifications which result from the final inspection.

g. Where contract drawings or specifications present options, only the option selected for construction shall be shown on the final as-built prints.

h. Systems designed or enhanced by the Contractor, such as HVAC controls, fire alarm, fire sprinkler, and irrigation systems.

i. Modifications (change order price shall include the Contractor's cost to change working and final as-built drawings to reflect modifications) and compliance with the following procedures.

(1) Directions in the modification for posting descriptive changes, if provided, shall be followed.

(2) A Modification Circle shall be placed at the location of each deletion.

(3) For new details or sections which are added to a drawing, a Modification Circle shall be placed by the detail or section title.

(4) For minor changes, a Modification Circle shall be placed by the area changed on the drawing (each location).

(5) For major changes to a drawing, a Modification Circle shall be placed by the title of the affected plan, section, or detail at each location.

(6) For changes to schedules or drawings, a Modification Circle shall be placed either by the schedule heading or by the change in the schedule.

(7) The Modification Circle size shall be 1/2 inch diameter unless the area where the circle is to be placed is crowded. Smaller size circle shall be used for crowded areas.

1.2.1.5 Drawing Preparation

The as-built drawings shall be modified as may be necessary to correctly show the features of the project as it has been constructed by bringing the contract set into agreement with approved working as-built prints, and adding such additional drawings as may be necessary. These working as-built marked prints shall be neat, legible and accurate. These drawings are part of the permanent records of this project and shall be returned to the Contracting Officer after approval by the Government. Any drawings damaged or lost by the Contractor shall be satisfactorily replaced by the Contractor at no expense to the Government.

1.2.1.6 Computer Aided Design and Drafting (CADD) Drawings

Only personnel proficient in the preparation of CADD drawings shall be employed to modify the contract drawings or prepare additional new drawings. Additions and corrections to the contract drawings shall be equal in quality and detail to that of the originals. Line colors, line weights, lettering, layering conventions, and symbols shall be the same as the original line colors, line weights, lettering, layering conventions, and symbols. If additional drawings are required, they shall be prepared using the specified electronic file format applying the same graphic standards specified for original drawings. **The Contractor will be provided a copy of the Tri-Service CADD standards to facilitate his efforts in the maintenance of design files.** The title block and drawing border to be used for any new final as-built drawings shall be identical to that used on the contract drawings. Additions and corrections to the contract drawings shall be accomplished using CADD files. The electronic files will be supplied on compact disc, read-only memory (CD-ROM). The Contractor shall be responsible for providing all program files and hardware necessary to prepare final as-built drawings. The Contracting Officer will review final as-built drawings for accuracy and the Contractor shall make required corrections, changes, additions, and deletions.

a. CADD colors shall be the "base" colors of red, green, and blue.

Color code for changes shall be as follows:

(1) Deletions (red) - Deleted graphic items (lines) shall be colored red with red lettering in notes and leaders.

(2) Additions (Green) - Added items shall be drawn in green with green lettering in notes and leaders.

(3) Special (Blue) - Items requiring special information, coordination, or special detailing or detailing notes shall be in blue.

b. The Contract Drawing files shall be renamed in a manner related to the contract number (i.e., 98-C-10.DGN). Marked-up changes shall be made only to those renamed files. All changes shall be made on the layer/level as the original item. There shall be no deletions of existing lines; existing lines shall be over struck in red. Additions shall be in green with line weights the same as the drawing. Special notes shall be in blue on layer #63.

c. When final revisions have been completed, the cover sheet drawing shall show the wording "RECORD DRAWING AS-BUILT" followed by the name of the Contractor in letters at least 3/16 inch high. All other contract drawings shall be marked either "AS-Built" drawing denoting no revisions on the sheet or "Revised As-Built" denoting one or more revisions. Original contract drawings shall be dated in the revision block.

d. Within 20 days after Government approval of all of the working as-built drawings for a phase of work, the Contractor shall prepare the final CADD as-built drawings for that phase of work and submit two sets of blue-lined prints of these drawings for Government review and approval. The Government will promptly return one set of prints annotated with any necessary corrections. Within 10 days the Contractor shall revise the CADD files accordingly at no additional cost and submit one set of final prints for the completed phase of work to the Government. Within 20 days of substantial completion of all phases of work, the Contractor shall submit the final as-built drawing package for the entire project. The submittal shall consist of one set of electronic files on compact disc read-only memory (CD-ROM), a sheet index showing sufficient planimetric data to indicate the geographical location of the project, and three sets of the approved red-line as-built drawings. They shall be complete in all details and identical in form and function to the contract drawing files supplied by the Government. Any transactions or adjustments necessary to accomplish this is the responsibility of the Contractor. The Government reserves the right to reject any drawing files it deems incompatible with the customer's CADD system. Paper prints, drawing files and storage media submitted will become the property of the Government upon final approval. Failure to submit final as-built drawing files and marked prints as specified shall be cause for withholding any payment due the Contractor under this contract. Approval and acceptance of final as-built drawings shall be accomplished before final payment is made to the Contractor.

e. Within 60 days after turning over the facility, the Contractor shall provide as-built CADD files containing all of the red-line mark-ups

incorporated and reflecting the completed as-built conditions of the project, including buildings, exterior utility systems, and all other features.

1.2.1.7 Payment

No separate payment will be made for as-built drawings required under this contract, and all costs accrued in connection with such drawings shall be considered a subsidiary obligation of the Contractor.

1.2.2 Final Approved Shop Drawings

The Contractor shall furnish final approved project shop drawings 30 days after transfer of the completed facility.

1.3 WARRANTY MANAGEMENT

1.3.1 Warranty Management Plan

The Contractor shall develop a warranty management plan which shall contain information relevant to the clause Warranty of Construction. At least 30 days before the planned pre-warranty conference, the Contractor shall submit the warranty management plan for Government approval. The warranty management plan shall include all required actions and documents to assure that the Government receives all warranties to which it is entitled. The plan shall be in narrative form and contain sufficient detail to render it suitable for use by future maintenance and repair personnel, whether tradesmen, or of engineering background, not necessarily familiar with this contract. The term "status" as indicated below shall include due date and whether item has been submitted or was accomplished. Warranty information made available during the construction phase shall be submitted to the Contracting Officer for approval prior to each monthly pay estimate. Approved information shall be assembled in a binder and shall be turned over to the Government upon acceptance of the work. The construction warranty period shall begin on the date of project acceptance and shall continue for the full product warranty period. A joint 4 month and 9 month warranty inspection shall be conducted, measured from time of acceptance, by the Contractor, Contracting Officer and the Customer Representative. Information contained in the warranty management plan shall include, but shall not be limited to, the following:

a. Roles and responsibilities of all personnel associated with the warranty process, including points of contact and telephone numbers within the organizations of the Contractors, subcontractors, manufacturers or suppliers involved.

b. Listing and status of delivery of all Certificates of Warranty for extended warranty items, to include pumps, motors, and transformers.

c. A list for each warranted equipment, item, feature of construction or system indicating:

1. Name of item.
2. Model and serial numbers.

3. Location where installed.
4. Name and phone numbers of manufacturers or suppliers.
5. Names, addresses and telephone numbers of sources of spare parts.
6. Warranties and terms of warranty. This shall include one-year overall warranty of construction. Items which have extended warranties shall be indicated with separate warranty expiration dates.
7. Cross-reference to warranty certificates as applicable.
8. Starting point and duration of warranty period.
9. Summary of maintenance procedures required to continue the warranty in force.
10. Cross-reference to specific pertinent Operation and Maintenance manuals.
11. Organization, names and phone numbers of persons to call for warranty service.
12. Typical response time and repair time expected for various warranted equipment.

d. The Contractor's plans for attendance at the 4 and 9 month post-construction warranty inspections conducted by the Government.

e. Procedure and status of tagging of all equipment covered by extended warranties.

f. Copies of instructions to be posted near selected pieces of equipment where operation is critical for warranty and/or safety reasons.

1.3.2 Performance Bond

The Contractor's Performance Bond shall remain effective throughout the construction period.

a. In the event the Contractor fails to commence and diligently pursue any construction warranty work required, the Contracting Officer will have the work performed by others, and after completion of the work, will charge the remaining construction warranty funds of expenses incurred by the Government while performing the work, including, but not limited to administrative expenses.

b. In the event sufficient funds are not available to cover the construction warranty work performed by the Government at the Contractor's expense, the Contracting Officer will have the right to recoup expenses from the bonding company.

c. Following oral or written notification of required construction warranty repair work, the Contractor shall respond in a timely manner. Written verification will follow oral instructions. Failure of the Contractor to respond will be cause for the Contracting Officer to proceed against the Contractor.

1.3.3 Pre-Warranty Conference

Prior to contract completion, and at a time designated by the Contracting

Officer, the Contractor shall meet with the Contracting Officer to develop a mutual understanding with respect to the requirements of this section. Communication procedures for Contractor notification of construction warranty defects, priorities with respect to the type of defect, reasonable time required for Contractor response, and other details deemed necessary by the Contracting Officer for the execution of the construction warranty shall be established/reviewed at this meeting. In connection with these requirements and at the time of the Contractor's quality control completion inspection, the Contractor shall furnish the name, telephone number and address of a licensed and bonded company which is authorized to initiate and pursue construction warranty work action on behalf of the Contractor. This point of contact will be located within the local service area of the warranted construction, shall be continuously available, and shall be responsive to Government inquiry on warranty work action and status. This requirement does not relieve the Contractor of any of its responsibilities in connection with other portions of this provision.

1.3.4 Contractor's Response to Construction Warranty Service Requirements

Following oral or written notification by the Contracting Officer, the Contractor shall respond to construction warranty service requirements in accordance with the "Construction Warranty Service Priority List" and the three categories of priorities listed below. The Contractor shall submit a report on any warranty item that has been repaired during the warranty period. The report shall include the cause of the problem, date reported, corrective action taken, and when the repair was completed. If the Contractor does not perform the construction warranty within the time frames specified, the Government will perform the work and backcharge the construction warranty payment item established.

a. First Priority Code 1. Perform onsite inspection to evaluate situation, and determine course of action within 4 hours, initiate work within 6 hours and work continuously to completion or relief.

b. Second Priority Code 2. Perform onsite inspection to evaluate situation, and determine course of action within 8 hours, initiate work within 24 hours and work continuously to completion or relief.

c. Third Priority Code 3. All other work to be initiated within 3 work days and work continuously to completion or relief.

d. The "Construction Warranty Service Priority List" is as follows:

Code 1-Electrical
(1) Power failure
(2) Security lights

Code 3-Electrical
(1) Street lights.

Code 1-Gas
(1) Leaks and breaks.

Code 1-Plumbing
(1) Leaking water supply pipes.

Code 3-All other work not listed above.

1.3.5 Warranty Tags

At the time of installation, each warranted item shall be tagged with a durable, oil and water resistant tag approved by the Contracting Officer. Each tag shall be attached with a copper wire and shall be sprayed with a silicone waterproof coating. The date of acceptance and the QC signature shall remain blank until project is accepted for beneficial occupancy. The tag shall show the following information.

a. Type of product/material_____.

b. Model number_____.

c. Serial number_____.

d. Contract number_____.

e. Warranty period_____from_____to_____.

f. Inspector's signature_____.

g. Construction Contractor_____.

Address_____.

Telephone number_____.

h. Warranty contact_____.

Address_____.

Telephone number_____.

i. Warranty response time priority code_____.

j. WARNING - PROJECT PERSONNEL TO PERFORM ONLY OPERATIONAL MAINTENANCE DURING THE WARRANTY PERIOD.

1.4 MECHANICAL TESTING, ADJUSTING, BALANCING, AND COMMISSIONING

Prior to final inspection and transfer of the completed facility; all reports, statements, certificates, and completed checklists for testing, adjusting, balancing, and commissioning of mechanical systems shall be submitted to and approved by the Contracting Officer as specified in applicable technical specification sections.

1.5 OPERATION AND MAINTENANCE MANUALS

Operation manuals and maintenance manuals shall be submitted as specified.

Operation manuals and maintenance manuals provided in a common volume shall be clearly differentiated and shall be separately indexed.

1.6 FINAL CLEANING

The premise shall be left broom clean. Stains, foreign substances, and temporary labels shall be removed from surfaces. Equipment and fixtures shall be cleaned to a sanitary condition. Filters of operating equipment shall be replaced. Debris shall be removed from drainage systems, gutters, and downspouts. Paved areas shall be swept and landscaped areas shall be raked clean. The site shall gave waste, surplus materials, and rubbish removed. The project area shall have temporary structures, barricades, project signs, and construction facilities removed.

PART 2 PRODUCTS (NOT USED)

PART 3 EXECUTION (NOT USED)

-- End of Section --

DIVISION 2 - SITE WORK

Section No.	Title
02001	Construction, General
02011	Site Investigation
02111	Clearing, Grubbing and Demolition
02200	Paving
KCMO2200	Supplement No. 1 to APWA 02200 - Paving
02201	Earthwork
02225	Channel Overlay Stone
02246	Geosynthetic Wall Reinforcement
02270	Erosion Control
02276	Modular Block Wall
02300	Seeding and Mulching
02440	Traffic Signs
02466A	Drilled Foundation Caissons (Piers)
02500	Sanitary Sewers
02518	Detectable Concrete Paver Blocks
02600	Storm Sewers
02610	Adjustment of Existing Manholes
02676	Water Main Relocations
02702	Sewer Pipe and Manhole Testing
02710	Rock Anchors
02715	Anchors and Drains
02720	Perforated Pipe
02820	Turf Reinforcement Mat
02923	Topsoil Material and Application
02924	Tree Preservation
02950	Trees, Shrubs, Ground Cover and Vines

SECTION 02001

CONSTRUCTION, GENERAL

PART 1 - GENERAL

1. SCOPE: This section outlines general construction requirements. Detailed requirements are specified in subsequent sections.

PARTS 2 & 3 - PRODUCTS AND EXECUTION

2. PLAN OF OPERATIONS: The work shall be performed in accordance with a Plan of Operations submitted by the Contractor for review, SD07-GA-RE. See also paragraph: Construction Sequencing, hereinafter. The work shall assure that nonflood period normal channel flows are not impeded at all times unless approved by the Contracting Officer. The Plan shall cover the detailed features of the work and shall be submitted within 60 days after Notice to Proceed. The Contractor shall plan his operations to prevent damage to, or interference with, existing power and underground utility lines, bridges, and roads which cross, parallel, or pass longitudinally along the construction right-of-way. The Plan shall include, but not be limited to: water control; access; haul routes; noise and dust control; disposal plan; temporary stockpiles; traffic control, concrete placement, scheduling of work on sanitary sewers and water main, and overall sequencing. As work progresses, the Plan shall be modified in writing as necessary to meet field conditions. The Plan and any changes thereto will be reviewed by the Contracting Officer for adherence to the contract. The Contracting Officer may suspend work for Contractor's failure to furnish a Plan of Operations within the specified time.

2.1 An Interim Plan shall be submitted within ten (10) days from Notice to Proceed, SD07-GA-RE. This plan shall describe work to be conducted during the first 60 days. The Plan of Operations shall supersede the Interim Plan if submitted prior to the 60th day.

2.2 Working Hours: All work shall be performed between the hours of 6:30 a.m. and 8:00 p.m. There shall be no work performed on Sundays. These restrictions may be relaxed, for performing operations incidental to the required work, such as concrete sawing, when submitted for approval at least 48 hours in advance of the proposed work.

3. CONSTRUCTION WORK AREA LIMITS: The construction work area shall be the composite area defined by the project limits and any temporary easement boundaries.

3.1 General: The Contractor will be assigned project work area limits as shown on the drawings. The project limits shown shall be observed unless otherwise approved by the City of Kansas City, Missouri (the City), through the Contracting Officer. The Contractor will not have sole access to the assigned work areas, and the use of the area shall be coordinated with the Government for the performance of the required work within these areas. Additional work

area required for the performance of this contract shall be subject to the following conditions.

3.2 Staging Area: The Contractor will be provided an area adjacent to the channel work for storing equipment, materials and supplies used for the construction of channel improvements. The location of the staging area is shown in the drawings, sheets T1.4 & T1.5

3.2.1 Legal Description: The following is a legal description of the property available for storing equipment and supplies.

3.3 Disposal Areas: Disposal areas are available to the Contractor subject to the limitations stated in SECTION: CLEARING, GRUBBING AND DEMOLITION and T1.4.

3.4 Area Not Controlled By Government: Should the Contractor make arrangements for utilization of any privately owned areas, he shall obtain a three-party written agreement between the Contractor, the property owner and the City. The Contractor shall relieve the Government of any claims for damages in writing, prior to operating off-site.

4. CONSTRUCTION SEQUENCING:

4.1 General: The Contractor shall limit the area under construction to the reach of the channel approved by the Contracting Officer to minimize disruption of the overall project limits. Construction of utilities may be in advance of channel excavation and is not restricted by any predetermined limits. Clearing, grubbing, excavation, and demolition shall not proceed more than 100 feet ahead of the finished channel unless approved by the Contracting officer. Finished channel shall include all required channel modifications, excluding seeding and mulching. The Contractor may continue to use the channel bottom for access and shall remain responsible for its condition during the entire contract. Stockpiling of excavated materials and construction materials shall be minimized and shall be contained within the construction right-of-way, provided adequate safety of the excavated slopes is maintained in all construction areas. Kansas City Power and Light (KCPL), Southwestern Bell, Time Warner Cable (TWC), Kansas City Missouri Water Services, Kansas City Water & Sewer Department and other appropriate agencies shall be contacted for coordination and relocation of utility lines adjacent to the channel, Prospect Bridge and other appurtenant structures.

4.2 City streets and roads and parking areas within and outside the project limits shall be kept free of dirt, mud, rock, or other materials spilled or dropped form equipment. Dust shall be controlled by sprinkling, washing, sweeping, or other methods as approved by the Contracting officer. In using the roads, the Contractor shall conform to any regulations or weight restrictions required by the City of Kansas City, Missouri, Missouri Department of Transportation, and the weight restrictions in the Special Clauses.

4.3 Cooperation Between Contractors: Construction work on other contracts will be under way concurrently with this contract. The obligations of the Contractor under this contract will include jointly planning and scheduling the

work, on a cooperative basis, with the other Contractors involved in order to minimize delays and interferences. Contracts to perform the work described hereinafter will be underway concurrently with this contract.

Contracting Agency	Description of Work	Estimated Completion Date or Completion Time
Kansas City Power And Light	Relocation of Electrical Lines	Co-ordinate with bridge demolition
Water Services Department	Waterline Relocation	Co-ordinate with bridge demolition
Southwestern Bell	Relocation of Telephone cables	Co-ordinate with bridge demolition
Time Warner Cable	Relocation of Telephone cables	Co-ordinate with bridge demolition

4.4 SEQUENCE OF CONSTRUCTION: The plan of operations shall be submitted to detail the proposed sequence of construction. The Contractor shall take into consideration the following limitation while developing the plan of operation.

4.4.1 Bridge Construction: The existing Prospect Bridge shall not be closed to through traffic until all detour routes are established and approved by the Kansas City Traffic Control and an alternate bus route has been submitted, approved and established by the KCATA. Contractor shall obtain a permit from MoDOT for placing detour signs on the MoDOT right of way. Contractor shall notify the news media of the detour 2 weeks before closure. The new bridge shall not be opened until all roadwork, intersection work, KCATA bus route modifications and sidewalk/pedestrian crossing work is completed and approved by KCATA, the Contracting Officer, and the Kansas City Traffic Control. The pedestrian traffic and parking lot traffic from the Paraclete retirement Manor shall be maintained at all times. The access way shall be kept safe, and free of dirt, debris, and construction materials at all times.

4.4.2 Paraclete Retirement Manor: Access to the entrance shall be maintained at all time to allow for fire and police protection. Prospect Avenue shall not be closed to traffic during construction in the vicinity of the manor. At least one lane of Prospect shall remain open at all times. Two lanes shall be accessible during emergency Fire or Police protection. A flagman and/or appropriate traffic signs and devices shall be provided during construction operations.

4.4.3 Swope Parkway Trail: The channel fill and access shall be completed before any work on Swope Parkway Trail. The fill shall be allowed to settle for 30 days before any work on the pavements for Swope Parkway Trail

construction.

4.4.4 Clearing of the North Slope Baseline Station 17+00 to Station 20+00: The trees and brush growing on the north slopes of the existing Swope Parkway embankment shall not be disturbed above elevation 775 feet until the channel fill for the reach has been cleared, and fill has been established to elevation 775 feet.

4.4.5 Utilities: All utility work shall be completed in accordance with requirements on the drawings as needed to stage the construction of the bridge and channel structures.

4.4.6 Dam Construction: Dam construction shall proceed to allow for adequate drainage of the channel flows without causing excessive erosion or damages to the required structures under normal channel flows. In the event of anticipated flooding of the channel due to extreme wet weather, the contractor shall take action to protect partially completed structures. This action shall be identified in the plan of operation as a Flood Contingency Plan.

4.4.7 Intersection Work: The Cleaver II, Prospect Avenue intersection traffic signals and intersection and parking connections shall be completed and accepted by the Contracting Officer and Kansas City Traffic Control before Prospect Avenue is closed or before the Prospect Avenue is reopened.

4.4.8 Bridge utility relocations: The existing Prospect Bridge shall not be demolished before utilities attached to the bridge are properly removed and relocated. Note the outage periods for KCPL and the water line.

4.4.9 KCPL, SWB, and TWB work: Contractor shall provide utility conduits for KCPL, SWB, and TWB relocations. KCPL, SWB, and TWB will provide the adjacent manholes, poles, and such. Coordination with these three utilities are required so they may run their cables and make connections as soon as possible.

5. PERMITS:

5.1 Highway Permits: The Contractor shall obtain the necessary construction permits Kansas City Traffic Control (Jere Meredith, 816-513-2665), and Missouri Department of Transportation (Vernon Koch, 816-622-0417 or Norman Beeman, 816-622-0413) for work near the Bruce Watkins and Cleaver II roadways.

5.2 Other permits: The Contractor shall obtain all other necessary permits for work along Brush Creek including but not limited to the NPDES (section 404) permit.

5.3 Kansas City Area Transportation Authority Coordination: KCATA shall be contacted 30 days before changes to an existing bus route caused by work on Prospect Bridge. The point of contact is Mr. Bob Kohler, 816-346-0233 or Jesse Ward, 816-346-0246.

6. TEMPORARY FENCING: The Contractor shall provide fencing around any areas under construction to minimize public access. Fencing shall be as continuous as possible excluding the channel bottom.

6.1 Fence shall have a minimum height of 4 feet.

6.2 Fence fabric shall consist of high density polyethylene or copolymer. The fabric shall be orange in color, U.V. Stabilized, and have a yield strength of not less than 500 pounds per foot.

6.3 Fence fabric shall be mounted on posts driven not less than 18 inches into the ground and spaced at not more than 15-feet horizontally.

6.4 Where fences must be maintained across the construction easement, gates shall be installed, and kept locked unless in use.

6.5 Chain link fencing for storage and work areas may be temporarily installed at contractor expense.

7. UTILITIES:

7.1 General: Water, telephone, power, storm drainage and sewer lines exist within the construction limits. The approximate location of each is shown on the plans and is the best information available at this time. Those lines that occur within the excavation limits shall be altered by the Contractor as required. The Contractor shall notify the appropriate utility companies within 7 days following contract award of construction work over, under, or adjacent to utility services. The Contractor shall organize and conduct a meeting for the purpose of coordinating and scheduling utilities work for the project. The meeting shall be conducted within two (2) weeks of submitting the Contractor's Interim Plan of Operation. The following persons (as applicable) shall be contacted for the meeting, and as necessary when construction work coincides with utilities.

C. Mike Rukgaber
KCMO-Traffic
816-513-2670

Billy L. Courtney
Manager-Engineering Design
SBC Southwestern Bell Tele Co.
5400 Foxridge - Room 500
Mission Ks. 66202
913-676-0378

Ray Wilson
MoGas Energy – Engineering
223 Gillis
KC Mo. 64120
816-472-3464

Time Warner Cable
Attn : Artie Pippin – Construction Dept.
6550 Winchester Ave.
KC Mo. 64133
816-358-5360--5613

Paul Divine
KCPL
8619 Prospect Ave.
K.C. Mo. 64132
816-276-5583

Call for approval before placing concrete around 6 inch conduits.
George King (KCPL)816-898-2214

Call for approval before placing concrete around 6 inch conduits.
Gary Spandle (KCPL) 816-810-5829

Jennifer King
Paraclete Manor
4725 Prospect Avenue
K.C. Mo. 64130
816-861-3829

Dig-Rite
1-800-dig-rite

Norman G. Beeman & Vernon Koch
Missouri Department of Transportation
816-622-0413 816-622-0417
600 Northeast Colbern Road
Lees Sunmit, Mo.64086

Dennis McMan
Manager Parks & Recreation, City of Kansas City, Mo.
816-513-7625

Michael Herron
Parks & Recreation Department
City of Kansas City, Missouri
6601 Swope Parkway
Kansas City, Missouri 64106
(816) 523-5613

Andy Shively
K.C.MO Water Services
816-513-2204

C. Ted Turney
Engineering Services Division
Water & Pollution Control Depts.
City of Kansas City, Missouri
414 East 12th Street
Kansas City, Missouri 64106
(816) 274-1755

Jim
Real Estate Department
Kansas City Power & Light Company
Post Office Box 679
Kansas City, Missouri 64141
(816) 245-3732

Joseph F. Reichert
Chief of Planning & Scheduling
Public Works Department
City of Kansas City, Missouri
414 East 12th Street
Kansas City, Missouri 64106
(816) 274-2069

7.2 Storm Sewer Alterations: All storm sewer and combined sewer outfalls that are affected by channel excavation shall be modified as indicated, and shall be kept open and free-flowing at all times. The Contractor shall verify the exact location of each utility prior to excavation.

7.3 Operation of Existing Facilities: Existing utilities or sewers which lie adjacent to and/or to which new sanitary sewers connect shall be kept in continuous operation throughout the construction period. No interruption will be permitted which adversely affects the degree of service provided. Provided permission is obtained from owner in advance, portions of the existing facilities may be taken out of service for short periods corresponding with periods of minimum service demands.

Contractor shall provide temporary facilities and make temporary modifications as necessary to keep the existing facilities in operation during the construction period. Under no circumstances shall sewage be discharged to any channel or creek.

7.4 Gas Line Relocations: None.

7.5 Work Along and Across KCPL Easement: The Contractor shall notify KCPL prior to construction in the area of all pole structures and power lines. Notification shall be given to allow sufficient time for a KCPL representative to be present at the jobsite during the period of construction.

Further stipulations are as follows:

a. The cost incurred to maintain a KCPL inspector on the site, when deemed necessary, and the cost of construction incurred by KCPL for the protection of any power line, such as temporarily relocating anchors, stabilizing structures or otherwise protecting a power line, and the repair of any damages to a power line resulting from work under this contract shall be borne by the Contractor.

b. Equipment working underneath KCPL transmission lines shall follow safety rules of clearances as specified in the National Electrical Safety Code and as prescribed by OSHA, in addition to safety requirements herein.

c. There shall be no stockpiling of dirt or other materials underneath KCPL transmission lines that would jeopardize normal clearances which are prescribed by the National Electrical Safety Code.

d. There shall be no open ditches or excavations closer than 10 feet from KCPL distribution or transmission poles.

7.6 Temporary Drainage Provisions: Contractor shall provide for the drainage of storm water and such water as may be applied or discharged on the site in performance of the work. Drainage facilities shall be adequate to prevent damage to the work, the site, and adjacent property.

Existing drainage channels and conduits shall be cleaned, enlarged, or supplemented as necessary to carry all increased runoff attributable to Contractor's operations. Dikes shall be constructed as necessary to divert increased runoff from entering adjacent property (except in natural channels), to protect owner's facilities and the work, and to direct water to drainage channels or conduits. Ponding shall be provided as necessary to prevent downstream flooding.

7.7 Pollution Control: Contractor shall prevent the pollution of drains and watercourses by sanitary wastes, sediment, debris, and other substances resulting from construction activities. No sanitary wastes shall be permitted to enter any drain or watercourse other than sanitary sewers. No sediment, debris, or other substance shall be permitted to enter sanitary sewers, and reasonable measures shall be taken to prevent such materials from entering any drain or watercourse.

7.8 Water Lines Relocated by the Contractor:

STATION	SIZE	REMARKS
8+66	16-inch	Ductile Iron

8. STOCKPILES: Stockpiles of materials to be used in construction may be stored within the area designated for Contractor use on the drawings. Stockpiles shall be kept in a neat and well drained condition, giving due consideration to drainage at all times. The ground surface at stockpile locations shall be cleared, grubbed, and sealed by rubber-tired equipment. Stockpiles of materials shall be protected from contamination which may destroy

the quality and fitness of the stockpiled material. If the Contractor fails to protect the stockpiles, and any material becomes unsatisfactory, such material shall be removed and replaced with satisfactory material from approved sources at no additional cost to the Government. Locations shall be coordinated with the Contracting Officer and the City of Kansas City Missouri. Areas disturbed by construction operations shall be left graded and seeded.

9. HAUL ROADS:

9.1 General: All haul roads and ramps shall be constructed at no cost to the Government. Upon completion of work, all haul roads and ramps shall be removed, and the area restored to its original condition. The Contractor shall provide all necessary lights, flagmen, signs, barricades and markings at access locations. Dust control shall be such that no dust leaves the site, and adequate to ensure safe operations at all times. Total haul weights shall be restricted to the limits stated in SPECIAL CLAUSES paragraph: Restrictions on Hauling Vehicles. If the Contractor elects to use the channel bottom as a haul route, he shall take adequate precautions to protect the finished channel bottom and underlaying rock. Any damage to the finished channel bottom shall be repaired at no expense to the Government. Plans for repairs shall be submitted for approval to the Contracting Officer.

9.2 Standards For Haul Roads: The minimum width of maintained traveled surface constructed by the Contractor shall be in accordance with the following formulas and shall provide a 2-ft. minimum shoulder width on each side of the traveled surface. The maximum allowable grade shall be in accordance with EM 385-1-1, Section 30.D. ROADS. Haul road design including grades and widths shall be submitted with the plan of operation.

(a) One-way roads:

<u>For Vehicles up to 12 Feet in Width (W)</u>

Minimum width (in feet) = W + 8

<u>For Vehicles 12 Feet and Over in Width (W)</u>

Minimum width (in feet) = W + 12

(b) <u>Two-way roads</u>:

Minimum width (W) (in feet) = 2W + 18

W is the maximum width in feet of the widest construction vehicle normally using the road. Fractional widths of roads shall be rounded to the next larger foot.

10. HAULING PERMITS: All necessary permits for hauling shall be the Contractor's responsibility.

10.1 Use of Boulevards: The following person shall be contacted regarding the use of roadways under Kansas City Parks, Recreations, and Boulevards jurisdiction.

Mr. Mike Herron
Parks and Recreation Department
City of Kansas City, Missouri
6601 Swope Parkway
Kansas City, Missouri 64106
(816) 523-5613

The Contractor shall obtain a special permit from Director of Parks, Recreation and Boulevards which will authorize the applicant to operate or move a vehicle or combination of vehicles of length or weight exceeding the maximum specified in the Code, SD18-FIO-RE. Such a permit will be issued subject to the following conditions:

10.1.1 The special permit shall prohibit operation before 6 a.m. and after 6 p.m. and shall be limited to 108 feet maximum total vehicular length, including combination of vehicles, and 80,000 pounds total weight.

10.1.2 The Contractor shall protect all streets, sidewalks and Boulevard systems, and shall make all arrangements and necessary repairs at his own expense. Any sidewalks or roadways affected by the construction shall be appropriately signed in accordance with the latest edition of the Manual on Uniform Traffic Control Devices, and its most current revisions. A Street Closure Permit will be required and shall be obtained from the Kansas City, Missouri Public Work Department - Street and Traffic Division prior to start of work.

10.1.3 The Contractor shall protect at his discretion all trees and shrubs within the route, by fencing, staking or other physical means to prevent damages to the plants. Should damage occur to any of the existing trees and shrubs the Contractor will be required to physically protect the remaining trees and shrubs as directed and it shall be the discretion of the Director of Parks, Recreation, and Boulevards to seek compensation for damages incurred, or replacement of the damaged stock with that of equal or better quality.

10.1.4 The Contractor shall remove any dirt, earth, rock, sand, shale, debris, rubbish, or other materials deposited, spilled, or dropped on any street in the performance of the work contemplated, and shall restore such street to its former condition to the satisfaction of the Director of Parks, Recreation, and Boulevards immediately after the incident.

10.1.5 Use of Other City Streets: The following person shall be contacted regarding the use of roadways under Kansas City Public Works jurisdiction.

Mr. Albert Gandara
Public Works Department
City Hall
Kansas City, Missouri 64106
(816) 274-2481

11. GRAFFITI: The Contractor shall take the necessary steps to minimize vandalism, and shall remove graffiti from retaining walls and other surfaces prior to final acceptance of the project. Incremental acceptance of permanent work shall not relieve the Contractor from this responsibility prior to acceptance of the total work.

12. ACCEPTANCE OF THE PUMPBACK AND DRAINAGE SYSTEMS: The systems shall be fully operational before acceptance. Approval and acceptance of the systems shall be based on the performance of the system during operation. All coordination involved to conduct performance tests at each location are the responsibility of the Contractor.

13. PAYMENT

Payment shall be in accordance with the bidding schedule.

* * * * * * * * *

* * * * * *

02011 SITE INVESTIGATION

A. GENERAL:

1. Channel Work:

The geologic profile shown in the channel work was developed from the test borings provided in the informational drawings. Geologic boring logs and test report information used in channel design is available at the US Army Corps of Engineers - Kansas City, 601 East 12th Street, Kansas City, Missouri. It remains the responsibility of the bidder to verify actual field conditions.

2. Graffiti:

The Contractor shall take the necessary steps to minimize vandalism, and shall remove graffiti from retaining walls and other surfaces prior to final acceptance of the project. Incremental acceptance of permanent work shall not relieve the contractor from this responsibility prior to acceptance of the total work.

B. MEASUREMENT AND PAYMENT: Graffiti protection shall be subsidiary to related concrete bid items.

02111 CLEARING, GRUBBING AND DEMOLITION

A. GENERAL:

1. Scope: This section covers clearing, grubbing, demolition and removal of structures including culverts, (except the storm sewer pipe alterations), bridge piers, bridge abutments, and channel rock walls and pavement, complete.

2. General: Clearing, grubbing, and demolition shall only be performed within the construction limits and as necessary for construction of haul roads. Contractor shall, to the maximum extent possible, protect all trees, shrubs, pavements and structures that occur beyond excavation limits.

(a) Existing Channel: The existing channel pavement and masonry stone walls, where required to be removed, shall be broken into pieces whose greatest dimension shall not exceed two feet (24 inches). Care shall be taken not to disturb existing conditions beyond the new construction limits. Concrete pieces shall not have any reinforcement extending more than one inch beyond the surface of the concrete. This material, except reinforcing steel, may be placed in the existing channel as random fill where it is to be abandoned. Placement of random fill in the channel shall be as described in specification section GRADING (CHANNEL).

3. Clearing: Clearing shall consist of removal to the ground surface of all trees and stumps, down timber, snags, brush, rubbish, and other obstructions.

4. Grubbing: Grubbing shall consist of removal of all stumps, roots larger than 2 inches in diameter, and matted roots, to a depth not less than 24 inches below finish grade or natural ground, whichever is lower.

5. Demolition: Demolition shall include, but not be limited to, items such as existing pavements (including rock walls), fences, retaining walls, drainage structures, pipes, bridge piers and abutments and other subsurface structures. Existing channel pavement and other structures may require pneumatic rams, demolition balls, rippers or non-explosive demolition agents. Subsurface demolition shall extend to a minimum of 2 feet below final grade.

B. DISPOSAL: All cleared and grubbed wood materials shall be disposed of in a permitted sanitary landfill or disposed of for some useful purpose at the Contractor's option. Disposal of

material by burning will not be permitted.

C. MEASUREMENT AND PAYMENT: Clearing, Grubbing and Demolition shall be paid as designated below and not included in contract quantities as channel excavation. Hauling and disposal shall be subsidiary costs to this work.

Item	Unit
"Clearing and Grubbing"	lump sum
“Demolition of Prospect Bridge”	lump sum
“Demolition, General”	lump sum

* * * * * *

02200 ASPHALT PAVING

A. GENERAL:

1. Scope: This section covers asphalt paving for areas.

2. Pavement Removal: The limits of the area to be removed shall be as indicated on the drawings and marked on the existing surface using straight lines parallel or perpendicular to the centerline of the excavation. All edges of the existing pavement surface shall be sawed to a minimum depth of 2 inches. The remaining edge may be sawed or broken to the depth as shown on the drawings.

3. Disposal: The materials removed shall be disposed of in accordance with SECTION: CLEARING, GRUBBING AND DEMOLITION.

4. Replacement Pavement: The replacement pavement shall consist of a hot-mixed bituminous pavement and/or base course dimensioned as shown on the drawings. The bituminous pavement shall be placed in layers of equal thickness, not to exceed 3 inches each layer, and as specified in paragraph "Bituminous Pavement" hereinafter.

5. Bituminous Pavement:

5.1 The bituminous pavement shall be bituminous central plant hot-mix as specified in SECTION: APWA STANDARD SPECIFICATION AND DESIGN CRITERIA DIVISION II SECTION 2200, PAVING. Note that all references to "Engineer" in the APWA guidance shall be interpreted as "Contracting Officer" for this contract.

5.2 Existing shoulders or side slopes excavated during pavement placement operations shall be restored to existing lines and grades as soon as practicable after placement has been completed, to prevent ponding of rain water.

6. Measurement and Computation of Quantities shall conform to SECTION: APWA STANDARD SPECIFICATION AND DESIGN CRITERIA DIVISION II SECTION 2200, PAVING.

7. Bidding Schedule Items for work covered in this section are as follows :

Item	Unit
"Asphalt Paving"	ton

CITY OF KANSAS CITY, MISSOURI
SUPPLEMENT NO. 1
TO APWA STANDARD SPECIFICATIONS AND DESIGN CRITERIA
DIVISION II SECTION 2200, PAVING

The following additions, deletions and/or revision shall become a part of the adopted standard specifications:

2201 SUBGRADE PREPARATION

2201.3.B. Paragraph 2201.3.B. shall be deleted and the following 2201.3.B. shall be added in lieu thereof:

2201.3.B. **Compacting the Subgrade:** The top 6 inches (15.24 cm) of subgrade for pavements shall be compacted to 95% of the standard proctor maximum density for the material used as determined by ASTM D 698 and within a tolerance of plus ***2%*** and minus ***3%*** of the optimum moisture content.

2201.3.C. Paragraph 2201.3.C. shall be deleted and the following 2201.3.C. shall be added in lieu thereof:

2201.3.C. **Protection and Maintenance of Subgrade**: The subgrade shall be protected from action of the elements or others. Any action (eg. settlement or erosion) that damages the subgrade ***or any subgrade that has become unacceptable*** prior to placing the pavement thereon shall be repaired and the specific lines, grades, cross-section, tolerance, density, and moisture content range reestablished.

2201.3.E. Delete the second paragraph of 2201.3.E. and the following second paragraph of 2201.3.E. shall be added in lieu thereof:

2201.3.E. Equipment for roll testing shall be a tandem dump truck (one front and two rear axles) ***carrying a twenty ton load.***

2205 ASPHALTIC CONCRETE SURFACE AND BASE

2205.2. The first paragraph of 2205.2. shall be deleted and the following 2205.2. shall be added in lieu thereof:

2205.2. **Materials**: No material shall be used until approved by the engineer. All costs associated with material testing, certification and the preparation of trial mixes to determine the job mix formula shall be the responsibility of the contractor. Representative

samples of all materials proposed for use under these specifications shall be submitted to ***a City approved private*** testing laboratory by the contractor, at the contractor's expense, for testing and the preparation of trial mixes to determine the job-mix formula. Additional tests necessary for determining conformance with the requirements specified herein will be performed under the supervision of the engineer without cost to the contractor, unless testing is the responsibility of the contractor.

2205.3.B. Delete the entire first paragraph, after the chart, beginning "Generally mix Types 1-01, 2-01, 3-01 and 4-01.", the entire "second paragraph" beginning "Mix Type 2-01 is acceptable for surfacing" … and the third paragraph beginning "Mix Type 4-01 is very susceptible to rutting……".

2205.3.C.2. The first phrase of paragraph 2205.3.C.2. shall be deleted and the following phrase of 2205.3.C.2. shall be added in lieu thereof:

2205.3.C.2. **Materials Evaluation**: All recycled materials shall have the following ***tests performed in addition to those required in 2205.3.D.:***

2205.3.J.1. Paragraph 2205.3.J.1. shall be deleted in its entirety and the following 2205.3.J.1. shall be added in lieu thereof:

2205.3.J.1. **Tests**: During production the ***engineer*** will have the following test performed by an approved laboratory: AC content, ***aggregate gradation after removal of AC***, marshall density, stability, voids, vma, vfa, and ***maximum*** theoretical density.

2205.3.J.2. Paragraph 2205.3.J.2. shall be deleted in its entirety and the following 2205.3.J.2. shall be added in lieu thereof:

2205.3.J.2. **Availability of Test Reports**: The results of the latest current test report shall be furnished to the engineer upon request. If the mix is found to be outside of tolerance, or outside the specification limits as specified in 2205.3., correction shall be made. Test reports shall be furnished on the following "Asphalt Concrete Test" form ***or a similar form containing equivalent information.***

2205.3.J.3. Paragraph 2205.3.J.3. shall be deleted in its entirety and the following paragraph 2205.3.J.3. shall be added in lieu thereof:

2205.3.J.3. **Frequency of Testing**: For mixes 1-01 through 4-01, the tests listed in paragraph *2205.3.J.1.* shall be performed ***a minimum of once for*** every 3000 tons (2700 metric tons) of asphalt production

except during initial startup, or whenever the production asphalt fails one of the following conditions at which time they will be tested every 1000 tons (900 metric tons) until four consecutive tests show compliance with the specifications:

a. Production void content measured at the plant discharge is 1% below laboratory mix design void content, or more than 5% of total void content.

b. Extracted gradation of the production asphalt exceeds the permissible gradation variation for the mix type being produced.

c. Asphalt cement exceeds the content variation for the mix type being produced.

2205.4.A. The second paragraph of 2205.4.A. shall be deleted and the following second paragraph of 2205.4.A. shall be added in lieu thereof:

2205.4.A. The contractor shall also furnish necessary laboratory sieves and a powered shaker device for sieve analysis, scales, ***ignition oven*** and supplementary equipment to make aggregate sieve analysis, asphaltic concrete paving mixture analysis, and paving mixture density tests.

2205.4.B. Paragraph 2205.4.B. shall be deleted in its entirety and the following 2205.4.B. shall be added in lieu thereof:

2205.4.B. The asphalt producer shall establish a quality control plan and shall maintain records. The quality control plan ***will be reviewed and approved by the City.***

2205.7.A. The second paragraph of 2205.7.A. shall be deleted and the following second paragraph of 2205.7.A. added in lieu thereof:

2205.7.A. Pavers shall be ***in good working condition,*** equipped with quick and efficient steering devices and shall be capable of traveling both forward and in reverse. They shall be equipped with hoppers and distributing screws that place the mix evenly in front of the adjustable screeds. They shall be equipped with either a vibrating screed or a tamping bar immediately preceding a static screed. ***The paver shall be equipped with a shoe that will produce a joint between laying strips having its face inclined at an angle of thirty degrees (30°) from the vertical. This type joint shall be used with all asphaltic concrete mixes. The shoe shall be designed in such***

manner that it will be capable of beveling depths up to 4 inches (10.16 cm).

2205.7.A.1. Paragraph 2205.7.A.1. shall be deleted in its entirety and the following 2205.7.A.1. shall be added in lieu thereof:

2205.7.A.1. **Automatic Screed Controls**: The paver shall be equipped with and use an approved system capable of automatically controlling the elevation and transverse slope of the paver screed unless otherwise directed by the engineer. An erected stringline, traveling stringline or other approved device operating on the roadbed being paved or the surface of the previously placed lane shall be used to establish the grade reference. The grade reference device shall operate on either or both sides of the paver as required and shall be capable of maintaining the desired transverse slope regardless of changes in the screed elevation. ***In the event of failure of the automatic screed control system, the contractor will be permitted to continue placing the asphaltic concrete mix for the rest of the day in which the failure occurred. The contractor will not be permitted to continue operations without using automatic screed controls unless permission has been granted by the engineer on each succeeding day following the failure.***

2205.7.B. The first paragraph of 2205.7.B. shall be deleted and the following first paragraph of 2205.7.B. shall be added in lieu thereof:

2205.7.B. **Rollers**: Compaction equipment shall consist of vibratory steel wheel, static steel wheel and pneumatic-tired rollers unless otherwise directed by the engineer. They shall be self-propelled and equipped with such controls that starting, stopping and reversing direction can be accomplished without displacing the hot asphaltic concrete pavement. ***Compaction equipment shall be in good working condition.***

2205.7.B.1. Paragraph 2205.7.B.1. shall be deleted in its entirety and the following 2205.7.B.1. shall be added in lieu thereof:

2205.7.B.1. **Steel-Wheel Rollers**: Steel wheeled rollers shall be vibratory ***or static*** two-axle tandem rollers. ***Vibratory*** rollers shall develop contact pressure of 250 to 350 pounds per inch of width (45 to 62.5 kg per cm of width) (vibratory mode) and 150 to 180 pounds per inch of width (26.8 to 32 kg per cm of width) (static mode). ***Static rollers shall be an 8 to 12 ton roller. The weight of the roller will be varied, by order of the engineer, to obtain contact pressures that will result in the required density.***

2205.7.B.2. Paragraph 2205.7.B.2. shall be deleted in its entirety and the following 2205.7.B.2. shall be added in lieu thereof:

2205.7.B.2. **Pneumatic-Tired Rollers:** ***Pneumatic-tired rollers shall consist of two axles on which are mounted an odd number of pneumatic tired wheels of equal size and diameter. The roller shall have at least nine pneumatic-tired wheels mounted in such a manner that the rear group of wheels will not follow in the tracks of the forward group, but shall be spaced to give essentially uniform coverage with each pass. There shall be a minimum of ¼ inch (0.636cm) overlap in the tracking between the forward and rear wheels. Axles shall be mounted in a rigid frame provided with a loading platform or body suitable for ballast loading. Tires shall be smooth and inflated to 90 p.s.i. (620 kPa). Construction of the roller shall be such that each wheel is loaded to a minimum of 2,300 pounds (1043 kg). Wheel loadings may be varied by order of the engineer to obtain contact pressures that will result in the required density.***

2205.8.C.1.h. Paragraph 2205.8.C.1.h. shall be deleted in its entirety and the following 2205.8.C.1.h. shall be added in lieu thereof:

2205.8.C.1.h. Any irregularities in alignment left by the pavers shall be corrected ***directly behind the machine. Immediately after the correction, the edge of the course shall be thoroughly compacted by tamping.*** Distortion of the pavement during this operation shall be avoided.

2205.8.D.1. This second paragraph pf 2205.8.D.1. shall be deleted and the following second paragraph of 2205.8.D.1. shall be added in lieu thereof:

2205.8.D.1. Immediately after spreading, each course of the pavement mixture shall be compacted by rolling. The initial or "breakdown" rolling shall be accomplished with a steel-wheeled roller ***meeting the requirements of 2205.7.B.1. and shall take place as closely behind the laydown machine as the temperature and condition of the mat will allow.*** The pneumatic-tired roller shall be used to knead and compact the pavement mixture following the initial rolling and preceding the final rolling. Care shall be exercised in the use of the pneumatic-tired roller to ensure that the pavement mixture is sufficiently cooled to avoid "picking up" of the mixture on the tires of the roller, and also to ensure that the pneumatic-tired rolling is completed before the mixture becomes too cool to allow satisfactory finish rolling. Final, or finish rolling shall be done with a steel-wheeled roller. The sequence of rolling operations may be changed with the approval of the engineer. All rolling

shall be longitudinal, starting near the edge of the pavement ***and progressing toward the center, overlapping on successive trips by not less than one-third (1/3) and no more than one-half (1/2) the width of the roller. Alternate trips of the roller shall be of slightly different lengths.***

2205.8.D.5. Paragraph 2205.8.D.5. shall be deleted in its entirety and the following 2205.8.D.5. shall be added in lieu thereof:

2205.8.D.5. **Edges**: The edges of the pavement shall be rolled concurrently with or immediately after rolling the longitudinal joint. ***Care shall be exercised in consolidating the material along the entire length of the edges. Before compaction, the materials along the unsupported edges shall be slightly elevated with a tamping tool or lute. This will permit the full weight of the roller wheel to bear on the material to the extreme edges of the mat. In rolling pavement edges, roller wheels shall extend approximately two inches (5cm) beyond the pavement edge, provided lateral displacement is not excessive.***

2207 COLD MILLING

2207.3.A.3. Paragraph 2207.3.A.3. shall be deleted in its entirety and the following paragraph 2207.3.A.3. shall be added in lieu thereof:

2207.3.A.3. **Material Disposal:** ***All material from the milling operation shall immediately be removed from the surface of the pavement and properly disposed of by the contractor at an approved disposal area.***

2208 PORTLAND CEMENT CONCRETE PAVEMENT

2208.0. The following paragraph 2208.0. shall be added:

2208.0. General: The term expansion joint, when used in plans, standard drawings or other specifications shall be understood to mean isolation joint.

2208.2.B. Paragraph 2208.2.B. shall be deleted in its entirety and the following paragraph 2208.2.B. shall be added in lieu thereof:

2208.2.B. **Concrete:** ***Concrete shall conform to MCIB Section 4-4 entitled "Concrete Pavement" and shall be MCIB Mix No. A658-1-2-0.365 or No. WA561-1-2-0.410. All coarse aggregate shall be***

limestone from the Bethany Falls Ledge and meet the following gradation:

Coarse Aggregate Gradation Limits, % Passing

	Nominal Maximum Size		
Sieve Size	***1"***	***¾"***	***½"***
1½"	***100***		
1"	***93-97***	***100***	
¾"	***62-82***	***90-97***	***100***
½"	***25-60***	***45-70***	***80-97***
3/8"	***16-44***	***20-55***	***40-70***
No. 4	***0-10***	***0-10***	***0-15***
No. 8	***0-5***	***0-5***	***0-5***

Concrete for ultra-thin whitetopping (UTW) projects shall also include fiber reinforement conforming to 2208.2.C.4., and shall have a maximum nominal coarse aggregate size of 1/3 the thickness of the concrete overlay.

If Fly Ash is to be substituted for cement in the production of concrete, it shall be in accordance with Subsection 2212 – Fly Ash Concrete.

2208.4.B.1. Paragraph 2208.4.B.1. shall be deleted in its entirety and the following paragraph 2208.4.B.1. shall be added in lieu thereof:

2208.4.B.1. **Method:** ***Contraction joints shall be sawed.***

2208.4.B.3. Paragraph 2208.4.B.3. shall be deleted in its entirety and the following paragraph 2208.4.B.3. shall be added in lieu thereof:

2208.4.B.3. For portland cement concrete pavements, contraction joints shall ***be one forth (1/4)*** the thickness of the slab (minimum)

2208.5.C. Paragraph 2208.5.C. shall be deleted in its entirety and the following paragraph 2208.5.C. shall be added in lieu thereof:

2208.5.C. **Concrete Finishing**:

1. ***Longitudinal Floating**: After the concrete has been struck off and consolidated, it shall be further smoothed by means of a mechanical longitudinal float or by float finishers using a longitudinal hand float. If a longitudinal hand float is used, it*

shall be operated from foot bridges spanning the pavement, and shall be worked with a wiping motion parallel to the centerline, and passing from one side of the pavement to the other. Movement ahead along the centerline of the pavement shall be in successive advances of not more than ½ of the length of the float. The float shall not be less than 3 feet (91.44cm) in length and 6 inches (15.24 cm) in width, and shall be properly stiffened and provided with handles at each end. The operation may be eliminated if specified tolerances can be attained by some other approved method.

In cases where the longitudinal floating operation has been eliminated, the pavement shall be scraped with a straight edge 10 feet (3.05m) long, equipped with a handle to permit it to be operated from the edge of the pavement. The longitudinal float and straightedge shall be operated so that any excess water and laitance are removed from the surface of the pavement. After the scraping operation, the surface of the pavement shall be within the specified tolerances.

2. ***Straightedging: While the concrete is still plastic, the slab surface shall be tested for smoothness with a 10-foot (3.05m) straightedge swung from handles 3 feet (91.44cm) longer than one-half the width of the slab. Straightedging shall be done on the pavement surface parallel to the centerline and at not more than 5 foot (1.52m) intervals transversely. After each test the straightedge shall be moved forward one-half its length and the operation repeated. When irregularities are discovered, they shall be corrected by adding or removing concrete. All disturbed places shall be smoothed with a float not less than 3 feet (91.44 cm) long and not less than 6 inches (15.24 cm) wide, and again straightedged. The pavement surface shall have no depression in which water will stand.***

3. ***Edging: Before final finishing is completed and before the concrete has taken its initial set, the edges of the slab and curb shall be finished to the radius shown on the plans or standards by the paving equipment, or with hand edging tools.***

4. ***Final Surface Finish:***

    a. ***Dragged Surface Treatment:***

        1) ***For roadways with a design speed of 45 MPH (70 KM/H) or less to be posted 45***

MPH (70 KM/H) or less, astroturf or burlap shall be dragged longitudinally over the finished surface to produce a tight, uniform textured surface and the edges shall be rounded in a workmanlike manner.

2) ***For roadways to be posted 50 MPH (80 KM/H) or more astroturf or burlap shall be dragged longitudinally over the finished surface to produce a tight, uniform, textured surface and the edges shall be rounded in a workmanlike manner. The texture achieved by the astroturf or burlap drag shall be tested by the contractor in accordance with ASTM E 965, "Test Method for Measuring Surface Macrotexture Depth Using a Sand Volumetric Technique", to ensure the texture is adequate for skid resistance. Test locations will be determined by the engineer. The results of ASTM E 965 shall show an average texture depth of any lot, as defined below and shall have a minimum value of 0.032 inch (0.80 mm). Any lot showing an average of less than 0.032 inch (0.80 mm) but equal to or greater than 0.024 inch (0.60 mm) will be accepted as substantial compliance but the contractor shall amend their operation to achieve the required 0.032 inch (0.80 mm) minimum depth. (It is not the intention of this tolerance to allow the contractor to continuously pave with an average texture depth of less than 0.032 inch [0.80mm]). Any lot showing an average texture depth of less than 0.024 inch (0.60 mm) shall require diamond grinding of the pavement represented by this lot to attain the necessary texture. Any individual test showing a texture depth of less than 0.020 inch (0.50 mm) shall require diamond grinding of the pavement represented by this lot to attain the necessary texture. Limits of any failing individual test shall be determined by running additional tests at 100 foot (30 m) intervals before and after the failing test location. All testing of the***

surface texture shall be completed no later than the day following pavement placement.

b. Groove Treatment: Unless otherwise specified the texture surface of travel lanes of pavement shall be given a suitable transverse or longitudinal grooving, or a dragged surface treatment as described in paragraph 2208.5.C.4.a.2. for roadways to be posted at 50 MPH (80 KM/H) or more. If grooving is required, surface grooving shall be done with a mechanical device such as a wire broom or comb or by hand. The broom or comb shall have a single row of spring steel tines, rectangular in cross section, 1/8 inch to 3/16 inch (3 mm to 4.8 mm) wide; spaced on ¾ inch (19 mm) centers of sufficient length, thickness, and resilience to form grooves to a depth of a minimum of 1/8 inch (3 mm) to a maximum of approximately 3/16 (4.8 mm) inch in the plastic concrete. If grooves are to be hand installed, the equipment to be used shall be reviewed and approved by the engineer. This operation shall be done at such time and in such manner that the desired surface texture will be achieved while minimizing displacement of the larger aggregate particles and before the surface permanently sets. Where abutting pavement is to be placed, the grooving should extend as close to the edge as possible without damaging the edge. If abutting pavement is not to be placed, the 6 inch (150 mm) area nearest the edge or 1 foot (300 mm) from the face of the curb is not required to be grooved. For small or irregular areas or during equipment breakdown, grooving may be done by hand methods.

5. Curing: As soon as practical after the concrete is finished, it shall be cured with one of the acceptable methods. Curing shall conform to the requirements of MCIB Section 4-4 Standard Concrete Specifications, except water proof paper or polyethylene sheeting are not acceptable mediums. If a liquid curing membrane is used, it shall be applied in accordance with the manufacturer's directions.

a. Methods of Applying Curing Membrane: A nozzle producing a uniform fan pattern will be used on all spray equipment when applying the liquid curing membrane. The curing compound should be applied

immediately after final finishing, and before the loss of all free water on the surface of the concrete. Normally, one smooth even coat shall be applied at a rate of 150 to 200 square feet per gallon (3.7 to 3.8 square meters per liter), but two coats may be necessary to ensure complete coverage and effective protection. Second coat should be applied at right angles to the first coat.

b. Curing Formed Surfaces: If the forms are removed from finished concrete pavement within a period of 72 hours or if a slip form paving machine has been used, these surfaces shall also be cured. Curing membrane damaged by joint sawing operations shall be repaired by the contractor as directed by the engineer.

6. Protection: The contractor shall, at his own expense, protect the concrete work against damage or defacement of any kind until it has been accepted by the engineer. All vehicular traffic shall be prohibited from using new concrete pavement until it has attained a minimum of 70% of the 28 day design strength. Concrete pavement that is not acceptable to the engineer because of damage or defacement, shall be removed and replaced, or repaired to the satisfaction of the engineer, at the expense of the contractor.

7. Diamond Grinding: If required by the contract, or if pavement smoothness criteria are not achieved, the contractor shall grind the riding surface to reduce or eliminate the irregularities.

a. A self-propelled grinding machine with diamond blades mounted on a multi-blade arbor shall be used. Equipment that causes excessive ravels, aggregate fractures, or spalls will not be acceptable. A uniform texture of the full lane width is required.

b. Transverse grooving will not be required.

c. Vacuum equipment or other continuous methods to remove grinding slurry and residue shall be used. Grinding slurry shall not flow across lanes being used by traffic.

d. After corrections have been made to the riding surface, the pavement shall be tested for smoothness using the

same technique used to determine smoothness originally. The contractor shall furnish and operate the smoothness measurement equipment, and evaluate the results as specified in Section 2211.

e. Additional grinding as required shall be performed to attain the required pavement smoothness. All deviations (in excess of ½ inch [12.5 mm] in a length of 25 feet [7.5 m]) within each section regardless of the initial average profilograph measurements shall be corrected.

8. Temperature Limitation: Concrete work shall be in accordance with the requirements of MCIB Section 10 and 11.

2208.8. The third paragraph of 2208.8. shall be deleted and the following third paragraph of 2208.8. shall be added in lieu thereof:

2208.8. Steel curb forms or integral slip forming shall be required to form all curbs except where impractical because of small radii street returns or other special sections.

2209 CURBING

2209.0. The following paragraph 2209.0. shall be added:

2209.0. General: The term expansion joint, when used in plans, standard drawings or other specifications shall be understood to mean isolation joint.

2209.2. Paragraph 2209.2. shall be deleted in its entirety and the following paragraph 2209.2. shall be added in lieu thereof:

2209.2. **Materials**: ***Concrete shall conform to 2208.2.B. and shall be MCIB Mix No. WA610-1-4-0.410 or WA561-1-2-0.410, except for the Central Business District of Kansas City, MO (defined as being bounded by Interstate Highway I-70 on the north and east, I-35 on the south and I-29 on the west) where Mix No. WA585-3/4-2-0.410 or Mix No. WA634-3/4-4-0.410 with special aggregate shall be used. The special aggregate shall be Iron Mountain Trap Rock, Nepheline Syenite or approved equal conforming to the gradation requirements of 2208.2.B.. In addition to the gradation requirements, the following shall be required for the special coarse aggregate:***

The fineness modulus for the aggregate shall not vary more than plus or minus 0.20 from the fineness modulus of the gradation on which the mix is designed.

The combined weight of sulfides such as Pyrite, Marcasite and Chalcopyrite shall not exceed 0.1% of the weight of the special aggregate sample. Material finer than the No. 200 (75? m) sieve shall not exceed 1% of the weight of the special aggregate sample.

Methods of sampling and testing shall conform to the application portions of Section 10 of ASTM Designation C33, Concrete Aggregates.

2209.3.B. The third paragraph of 2209.3.B. beginning with "The top 6 inches (15 cm) of the subgrade shall be compacted….." shall be deleted.

2209.4.B. Paragraph 2209.4.B. shall be deleted in its entirety and the following 2209.4.B. shall be added in lieu thereof:

2209.4.B. **Contraction Joints**: Curbing shall have contraction joints ***installed*** at intervals of not less than 10 feet (3.05 m) or more than 15 feet (4.57 m). They shall extend through the entire curb section from the top of the curb to a depth 2 inches (5.0 cm) below pavement surface.

1. **Method**: Contraction joints shall be formed or sawed.

   a. When sawing joints, the contractor shall begin as soon as the concrete hardens sufficiently to prevent excessive raveling along the saw cut and shall finish before conditions induce uncontrolled cracks, regardless of the time or weather. When joint sealing backup material is specified with sawed joints the first stage, which provides a relief cut shall be approximately 1/8 inch (3 mm) wide, and shall be to plan depth. The second stage which widens the joints to allow the insertion of joint sealing backup material to plan depth shall not be performed until the concrete is at least 48 hours old, and shall be delayed longer when the sawing causes raveling of the concrete. If second stage sawing is performed prior to the completion of the curing period, the contractor shall maintain the cure by use of curing tapes, plastic devices, or other materials approved by the engineer.

b. When forming joints, templates shall be 1/8 inch (0.32 cm)
metal cut to the configuration of the curbing section. The templates shall be secured at the proper locations so that they will not be disturbed by the depositing of concrete. The templates shall be removed as soon as the concrete has attained its initial set and finished with a ¼ inch (0.64 cm) radius on all exposed edges.

2. **Joint Sealer**: ***If*** specified, joint sealants shall conform to Section 2208.2.

2209.5.A. Paragraph 2209.5.A. shall be deleted in its entirety and the following paragraph 2209.5.A. shall be added in lieu thereof:

2209.5.A. **Concrete Placement**: Concrete shall be mechanically vibrated ***except for Mixes No. WA-610-1-4-0.410 and WA-634-3/4-4-0.410 and shall not be allowed to extrude below the forms to cause an irregular alignment of the abutting street pavement.***

2209.7. Paragraph 2209.7. shall be deleted in its entirety and the following paragraph 2209.7. shall be added in lieu thereof:

2209.7. **Joint Sealing and Clean-Up**: ***Only the sidewalk portion of the curbing will require joint sealing. An approved*** joint sealer shall be applied in accordance with the manufacturer's directions within 7 days of the placement of the concrete.

The contractor shall be responsible for the removal of excess dirt, rock, broken concrete, concrete spatters and overspray from the area of the construction.

2210 MEASUREMENTS AND PAYMENTS

2210.2. Paragraph 2210.2. shall be deleted in its entirety, and the following paragraph 2210.2. shall be added in lieu thereof:

2210.2. **General***:* Unless specifically altered by the Contract Special Provisions, the methods of measurement and payment shall be as specified in each section herein, and as listed in the proposal. ***The term Proposal or Itemized Proposal shall also be understood to mean Bid Form – Unit Prices.***

2211 SMOOTHNESS

2211.3. Table 1 Pay Adjustment at the end of paragraph 2211.3. shall be deleted and the following table shall be added in lieu thereof:

2211.3. **Table 1 Pay Adjustments**

Initial Average Profilograph Measurements (inches/mile)	(cm/kilometer)	Percent of Contract Unit Prices
0-10	(0-15.8)	105.0
10.1-15	(15.9-23.7)	100.0
15.1-20	(23.8-31.6)	90.0
20.1-25	(31.7-39.6)	80.0
Greater than 25	***(39.5)***	***Rejection***

2212 The following section 2212 shall be added:

2212 FLY ASH CONCRETE

2212.1. ***Scope: This section governs the substitution of fly ash for cement in the production of concrete.***

2212.2. ***General: All materials used in fly ash concrete shall be approved by the Materials Engineer prior to concrete production. Fly ash replacement of cement shall be on a pound for pound basis. This replacement can range from 15% to a maximum of 25% of Class C fly ash substituted for Type I or Type II cement. Fly ash shall not be used as a replacement for Type IP cement or Type I (PM) cement. Fly ash shall not be used in trap rock or special aggregate concrete or concrete mixes requiring Type III cement. The same sources of fly ash approved for each project shall be used exclusively for its duration. Fly ash shall not be used in concrete placed between October 15 and April 15.***

2212.3. ***Fly Ash Concrete Control and Quality:***

A. ***All fly ash used in concrete shall conform to the requirements of ASTM C618, Class C, (Specifications for Fly Ash and Raw or Calcined Natural Pozzolan for use as a Mineral Admixture in Portland Cement Concrete) except as modified herein.***

B. ***Fly ash used in concrete shall be only from sources prequalified in accordance with these specifications.***

C. ***The loss on ignition of the fly ash shall be no more than 1.5%.***

D. ***Fly ash may only be used with the type of cement used in the pre-qualification test. The type and source of cement used by the manufacturer shall be shown on all test reports.***

E. ***The course aggregate used in fly ash concrete shall meet the gradation and quality requirements of 2208.2.B.***

F. ***The fine aggregate used in fly ash concrete shall meet the requirements of 2208.2.B.***

G. ***The cement used in fly ash concrete shall conform to ASTM C-150 (Portland Cement) Type I or Type II.***

H. ***The air content of fly ash concrete shall be maintained at a minimum of 6%. Air entrainment admixtures used in fly ash concrete shall conform to ASTM C-260 (Air-Entraining Admixtures for Concrete).***

I. ***All fly ash concrete mixes shall be water-reduced. The water-reducing admixtures shall conform to ASTM C-494 (Chemical Admixtures for Concrete) Type A or Type D.***

J. ***Maximum mixing water used in fly ash concrete shall be based on total cementitious material.***

2212.4. ***Pre-qualification Procedures for Class C Fly Ash:***

Prior to use of fly ash, the fly ash marketer shall submit in writing to the City of Kansas City the following information:

A. ***Name, address, and owner of fly ash source.***

B. ***Name of coal mine. If more than one mine is used, list all sources.***

C. ***Type of coal burned.***

D. ***Verifications that Class C fly ash is being supplied.***

E. ***Description of production procedures, including, but not***

limited to, pulverization techniques, additives mixed with coal, precipitation additives, and ash collection methods.

F. ***Copies of test results to document history of ash quality and consistency including, but not limited to, a record of 10 tests for fineness, specific gravity, and loss on ignition, and two complete chemical and physical tests complying with ASTM C618.***

G. ***Complete description of quality control program used to monitor fly ash production.***

H. ***The manufacturer shall perform complete chemical and physical tests on each 1000 tons of fly ash produced and/or at the discretion of the Engineer.***

I. ***Each shipment or load of fly ash delivered to the ready mix plant from the approved source shall carry the following statement:***

"This is to certify that this fly ash meets the requirements of the contract specifications and was loaded from a tested and certified source."

_____
Name of Manufacturer

_____
Shipping Facility

_____
Date Tested

By _____
Signature

2212.5. ***Mix Design Requirements and Prequalification Tests:***

A specific combination of both fly ash and cement sources shall be approved for a project. A change in the cement source will not require a new mix design provided the cement type does not change.

A. ***28-day strength verifications of fly ash concrete mixes are required from a private testing lab to assure that the design strengths are attained.***

B. ***The maximum cement reduction for mix design of fly ash concrete shall be 25%.***

C. ***Calculations for W/C ratio and yield for fly ash concrete shall be based on cement plus fly ash (W/C+P) for total cementitious material.***

D. ***Sources of all ingredients used in the mix design for fly ash concrete shall be included with the submitted certified mix design.***

2212.6. ***Ready Mix Plant Requirements:***

All delivery tickets for fly ash concrete shall show batch weights of all materials used in the mix. Computerized print cuts of mixes will be accepted.

An inspector is required during plant batching operation for all non-computerized batching and non-ticket printout plants. If the City for whatever reason cannot make this plant inspection, then the supplier shall provide inspection by a private testing laboratory as approved by the Materials Engineer.

This supplement shall become effective February 15, 2002. It supercedes all previous supplements to this section.

Approved and adopted as Official Document No. _____ this _____, day of _____ 2002.

George E. Wolf Jr., P.E.
Director of Public Works
of Kansas City, Missouri

02201 EARTHWORK

A. GENERAL:

1. Related Documents: Drawings and general provisions of the Contract, including General Conditions and Division-1 specification sections, apply to work specified in this section.

AMERICAN SOCIETY OF TESTING AND MATERIALS (ASTM)

ASTM C 33-01	(1999) Concrete Aggregate
ASTM D 422	(1998) Particle-Size Analysis of Soils
ASTM D 698	(1998) Laboratory Compaction Soils Characteristics of Soil Using Standard Effort (12,400 ft-lbf/cu. Ft.)
ASTM D 1140	(1997) Amount of Materials in Soils Finer than the No. 200
ASTM D 1556	(1996) Density and unit weight of Soil in Place by the Sand-Cone Method
ASTM D 2167	(1994) Density and unit weight of Soil in Place by the Rubber Balloon Method
ASTM D 2487	(1992) Classification of Soils for Engineering Purposes (Unified Soil Classification)
ASTM D 2922	(1996) Density of Soil-Aggregate in Place by the Nuclear Density Method
ASTM D 3017	(1996) Density of Soil and Rock in Place by the Nuclear Methods (Shallow Depth)
ASTM D 4253	(1996) Maximum Index Density and Unit Weight of Soils Using a Vibratory Table

ASTM D 4254	(1996) Minimum Index Density and Unit Weight of Soils Using a Vibratory Table
ASTM D 4318	(1998) Liquid Limit, plastic Limit, and Plasticity of Soils
ASTM D 4643	(1993) Determination of Water (Moisture) Content of Soil by the Microwave Oven Method
ASTM D 5195	(1996) Density of Soil and Rock in Place Below the Surface by Nuclear Methods

ENGINEERING MANUALS (EM)

EM 385-1-1	(1996) U.S. Army Corps of Engineeers Safety and Health Requirements

2. General: The work covered by this section consists of channel excavation, common excavation, shoring and the placing and compacting of suitable materials obtained from required excavation and approved sources for utilization in the construction of structural embankments.

B. EXCAVATION:

1. Common Excavation: Common excavation includes all material removed to form the channel banks and floor as well as the sidewalks, ramps, and bridge. Excavation shall consist of the removal and disposition of all materials between the top of existing ground and the final excavation limits or top of hard rock, as defined below. These materials consist of topsoil, clay, silt, sand, gravel, loose rock and shale. Prior to beginning channel excavation, the Contractor shall cross section the area of work. Quantities for channel excavation payment shall be computed using the initial cross section data compared with a cross section taken after excavation to final limits or top of hard rock has been made.

2. Rock Excavation: Rock excavation is defined as all material below the top of hard rock, which is defined as a limestone. Excavation shall consist of the removal and disposition of all materials between the top of the hard rock and the final excavation limits. These materials consist of limestone, shale, siltstone and sandstone. Prior to beginning rock excavation, the Contractor shall cross section the area of work. Quantities for rock excavation payment shall be computed using the initial cross section data compared with a cross section taken after excavation to final limits has been made.

3. Excavation of Rock:

(a) Excavation Methods: The Contractor shall submit an excavation plan to the Contracting Officer at least two weeks prior to beginning any excavation, SD09GA-RE. The Contractor may generally use any conventional method or equipment for rock excavation provided that they are acceptable to the Contracting Officer. It is anticipated that all shales can be excavated using conventional earth moving equipment, although reaches exist which may require rippers. Concrete slabs and other structures may also require pneumatic rams, demolition balls, rippers or non-explosive demolition agents.

(b) Sensitive Excavation Areas: Certain areas, regardless of the method of excavation, will require the Contractor to take added precautions to prevent damage to existing structures. Specific attention is directed to bridge footings, bridge abutments, utilities, buildings, and any other structures, which could be damaged by excessive vibrations or dislodged foundation rock caused by excavation. The Contractor shall bear full responsibility for any and all damages caused by excavation and shall restore any damaged structure to a condition, which is equivalent to the original and acceptable to the Contracting Officer.

(c) Shales: Shales in the project area are soft and subject to incising by water and/or rutting by construction equipment. The Contractor shall include plans for shale protection in his excavation plan. Shales, which become unsuitable for paving foundations or other concrete placement because of protection failure, shall be removed and replaced with concrete fill at Contractor expense.

(d) Scaling: Scaling of all excavated surfaces, regardless of the method used, will be required throughout the life of this contract. Scaling shall be done so that surfaces are free of loose or unstable rock.

4. Lines, Grades, and Tolerances:

(a) Overburden: Final grades shall conform to the minimum lines and

grades shown on the drawings. A tolerance of plus or minus six inches will be permitted on overburden final grades.

(b) Rock: The excavation limits established on the drawings are minimum neat lines for backfill and no payment will be made for excavation beyond these established limits.

(c) Minimum excavation limits for backfill are further defined by lines, control points, and elevations on plan and profile drawings which delineate final configurations of walls, channel paving and other structures. Additional backfill required because of over excavation shall be furnished by the Contractor at no additional cost to the Government.

(d) Excavated bedrock surfaces against which concrete is to be placed will be classified as special surfaces. All vertical special surfaces shall be machine sawed, pre-split, or line drilled. No rock shall project or extend beyond the special surface excavation limits into the area to be covered with concrete.

(e) Vertical special surface tolerances shall be six inches beyond the minimum neat lines, however no additional payment will be made for either excess rock excavation or for additional concrete required to complete the structure to conform to the final finished design lines. If over breakage/ over excavation in excess of six inches occurs on vertical special surfaces, the contractor shall, at his expense, reform a surface with concrete fill against which to place the required structure. Such surfaces shall conform to the excavation lines and grades shown for the original rock faces replaced. Verification of final lines shall be made by measuring from the front of concrete forms to the face of the excavated rock walls.

(f) Horizontal special surfaces, which support concrete structures such as the channel slab, dams, walls, etc., shall be excavated to the depths shown on the drawings. Unsatisfactory material removed below indicated depths at the direction of the Contracting Officer will be considered channel excavation and will be paid for accordingly. Satisfactory material removed below the depths shown without specific authorization or direction from the Contracting Officer shall be replaced by increasing the thickness of the concrete structure at no additional cost to the Government.

5. Foundation Preparation: All rock against which concrete is to be placed shall be prepared to the satisfaction of the Contracting Officer. Such rock surfaces shall be prepared by picking, barring, wedging, or other similar methods which will leave the rock in the best possible condition to bond with concrete. The rock surfaces, including joints or seams encountered, shall be cleaned of all loose or decomposed rock, earth, sand, clay or other

objectionable materials by the use of picks, shovels, or similar tools if necessary, and by the use of high velocity air-water jets or other means approved to the Contracting Officer. Any rock foundation preparation method that results in erosion, degradation, or other damage to the rock foundation shall be adjusted to achieve the desired result or discontinued and another approved method used. Exposed shale surfaces against which concrete is to be placed must be protected to prevent desiccation and slaking and/or rutting by vehicles or water flow. The Contractor shall provide for this protection by means of vapor barriers such as RC 500, material such as burlap or visqueen, compacted earth, or any other acceptable method, which will preserve the exposed shale. Payment for shale protection shall be incidental to the applicable structural work item.

6. Disposal of Excess Excavation: The Contractor shall be responsible for proper disposal of excess excavated material not used as "Random Fill or Impervious Fill".

C. BACKFILL:

1. Backfill for Channel Retaining Walls and Channel Slopes:

(a) Random fill to be used for the channel retaining walls or channel slopes shall consist of suitable material. It shall be free of plant growth, roots, and humus. The random fill shall contain no individual rocks or pieces of rubble with a maximum dimension of nine inches or three-fourths the lift thickness, whichever is smaller. Random fill shall be dumped or spread in successive horizontal layers of loose material not more than 6 inches in depth where hand operated compactors are used and 12 inches in depth elsewhere. This material, except for random fill under walls or other structural concrete features shall be compacted to a minimum of 90 percent Standard Proctor Density as determined by ASTM D 698 within the tolerance of the moisture for the type of material at ninety percent of maximum density as shown on the moisture density curve obtained. Random fill on which structural concrete features will be constructed shall be compacted to a minimum of 92 percent and a maximum of 98 percent Standard Proctor Density at 0 to 4 percent wet of optimum moisture content in accordance with ASTM D 698.

(b) Impervious fill to be used at the dam locations shall consist of CL and CH materials with a liquid limit not greater than 60. It shall be free of plant growth, roots, and humus. The impervious fill shall contain no individual rocks or pieces of rubble with a maximum dimension exceeding 3 inches. The impervious fill shall be dumped or spread in successive horizontal layers of loose material not more than 6 inches in depth where hand operated compactors are used and 9 inches in depth elsewhere. The material shall be compacted to a minimum of 95 percent Standard Proctor Density at plus (+) or minus (-) 3% of optimum water content as defined in the Standard Proctor Density Test (ASTM D-698).

(c) Pervious fill to be used as backfill for the channel retaining walls shall be obtained from approved off site sources on the Missouri or Kansas Rivers. It shall be clean, free-draining, durable, siliceous, natural sand free of clay-balls and within the following gradation ranges as determined by washing over the specified sieves.

Sieve size	Percent by weight passing
3/4 inch	100
No. 4	90 - 100
No. 16	55 - 85
No. 50	5 - 20
No. 200	0 - 5

Pervious fill shall be placed in layers not more than 6 inches in depth. The material shall be essentially saturated and then compacted to a relative density of not less than 50 percent and not greater than 75 percent. Maximum and minimum densities shall be determined by ASTM D 4253 and D 4254.

(d) Coarse filter to be used as backfill for the channel retaining walls, under the drop structure paving, and drain material for the slope paving shall be crushed Bethany Falls limestone, ASTM size number 7, meeting the grading and quality requirements of ASTM C 33, except that the LA abrasion loss shall not exceed 40. The coarse filter material shall be placed and compacted such that the top surface is even with or slightly above the adjacent pervious. The material shall be placed in layers not more than 9 inches in depth and compacted with two passes of a vibratory plate meeting the requirements of paragraph C.2(a)(1).

(e) At the Contractor's discretion, pervious may be replaced by coarse filter as wall backfill material. If the Contractor chooses this option, filter fabric shall be required between the coarse filter and existing overburden material or earth fill.

(f) Topsoil shall be placed in accordance with the lines and grades shown on the drawings for channel construction and shall comply with specification section TOPSOIL MATERIAL AND APPLICATION. All disturbed areas within the channel construction receiving topsoil or otherwise disturbed by the Contractor’s activities shall be seeded in accordance with section SEEDING except those areas designated for sodding.

2. Backfilling Around Structures:

(a) General: Backfill shall not be placed against concrete walls prior to the in-place concrete reaching the specified 28-day strength. As far as practical, backfill shall be brought up evenly on both sides of the retaining walls. Heavy equipment, producing an equivalent surcharge of greater than 360 psf, shall not be operated closer to any concrete structure than a distance equal to the height of the backfill above the top of the footing. The area remaining shall be compacted with compaction equipment meeting the following requirements:

(1) Vibratory Plates: Vibratory plates shall be limited to hand-operated equipment. The static weight shall not exceed 750 pounds. Contact pressure is defined as the static weight plus dynamic force divided by the plate area, and shall not exceed 10 pounds per square inch.

(2) Rammer/Impact Equipment: Rammer plates, tampers or other impact type equipment shall be limited to hand-operated equipment. The static weight shall not exceed 250 pounds. Contact pressure is defined as the static weight plus dynamic force divided by the plate area, and shall not exceed 20 pounds per square inch.

(3) Rollers: Rollers shall include smooth drum or tamping type, and may be either self propelled or pull-type. Pulling equipment shall meet the surcharge restrictions as stated above. Weight per linear foot of the roller shall be defined as the static weight plus dynamic force divided by the roller width, and shall not exceed 1500 pounds per linear foot.

3. Select Material: Select material shall consist of natural sand and gravel, crushed rock, manufactured sand, or quarry fines that have a maximum particle size of 1-inch and 15 to 50 percent passing the #200 sieve. The portion of the material passing the #40 sieve shall either be non-plastic or have a plasticity index equal to or less than 12. Select material should be compacted to at least 95 percent of the maximum density as determined by ASTM D-698.

4. Old Channel Backfill: Broken concrete channel materials removed from the channels for this contract may be used for backfill in designated areas of the old channel. Before any fill is placed in the old channel, all existing concrete channel lining in designated areas shall be broken in place with a pavement breaker. No voids shall remain below the existing channel to receive fill. The existing channel pavement above visible voids shall be removed such that adjacent structures are not damaged. Concrete slabs to be used for backfill in the old channel shall have all exposed rebar of wire mesh removed within one inch of the concrete surface. All old slabs to be used for channel fill shall be a maximum

size of 2 feet in any dimension/direction. The old slabs shall be placed to minimize contact with any existing broken slab remaining in place or demolition slab to be used for fill. Adjacent slab pieces shall be placed such to minimize voids are and satisfy compaction requirements. Slab pieces shall be placed in adjacent lifts assuring that soils are placed between adjacent lifts of demolition slab fill. All fill placed in the old channel including rubble shall have a minimum of 2 feet of final grade soil cover. Old Channel Backfill shall not be used for the north bridge abutment and approach slab for construction of the bridge. Random fill shall be placed in this area. The limits shall be defined as 30 feet upstream and downstream beyond the outside bridge width. Payment for slabs used for placement as fill in the old channel shall will be covered under SECTION : CLEARING , GRUBBING AND DEMOLITION.

6. Testing: Testing shall be the responsibility of the Contractor and shall be performed at no additional cost to the Contracting Officer. Field in-place density shall be determined at locations selected by the Field Inspector. Field in-place density testing shall be in accordance with ASTM D 1556 or D 2922 and shall be performed as outlined below:

Material	One In-Place Density Test Per:	Accompanying Laboratory Test
Random Fill	500 cu. yds.	ASTM D 698 for each type of material.
Impervious Fill	500 cu. yds.	ASTM D 698 for each type of material.
Pervious	1,000 cu. yds.	ASTM D 422, D 4253, and D 4254 for each in-place test.
Coarse Filter	None	ASTM D 422 for each 200 cubic yards.

When test results indicate that material is not as specified, the material shall be removed, replaced, and recompacted to meet specification requirements.

D. MEASUREMENT:

1. Common excavation shall be measured by surveyed cross sections taken before and after the required excavation has been completed. Initial cross sections for excavation quantities will be taken following demolition and removal of channel paving. Top of rock shall be defined on the cross sections for defining limits of lines, grades, and tolerances.

2. No measurement will be made to determine the quantities of materials used for the required shoring.

3. Top soil shall be measured to the lines and grades shown in the drawings.

4. No measurement will be made to determine the quantities of structural excavation.

F. PAYMENT:

1. Payment for Top Soil shall be made at the contract unit price per cubic yard for Top Soil as listed in the proposal. Such payment and price shall constitute the full compensation for all labor, equipment and materials and for the performance of all work necessary to complete the item.

2. Payment for Common and Rock Excavation shall be made at the contract unit price per cubic yard as listed in the proposal. Such payment and price shall constitute the full compensation for all labor, equipment and materials and for the performance of all work necessary to complete the item.

3. Payment shall be made for random channel fill, pervious fill, coarse filter and impervious fill at the contract unit price per cubic yard as listed in the proposal. Such payment and price shall constitute the full compensation for all labor, equipment and materials and for the performance of all work necessary to complete the item.

4. No separate shall be made for Select Material (to be used underneath Dam 4, 5 and 6).

Item	Unit
Top Soil	Cu. Yd.
Common Excavation	Cu. Yd.
Rock Excavation	Cu. Yd.
Impervious Fill	Cu. Yd.
Random Fill	Cu. Yd.
Pervious Fill	Cu. Yd.
Coarse Filter Fill	Cu. Yd.

******

02225 CHANNEL OVERLAY STONE

A. GENERAL:

1. Scope: This section covers stone protection, complete.

2. General: Operation shall be conducted in a manner to produce a stone that will conform to the specified requirements hereinafter, and shall include selective quarrying, handling, processing, blending, and loading as required. A complete description of the methods used in the operation for production of materials shall be submitted, SD01-GA-EC.

3. Plan of Operations: A detailed plan of operations shall be submitted and approval obtained, prior to beginning production or placement of the stone protection, SD01-GA-EC. The plans of operations shall include selective quarrying, handling, processing, blending, loading, transporting, testing and placing on the site. As work progresses, the plan of operations shall be modified as required to meet the following specifications.

4. Quarry Operations: If the method used fails to produce the required materials, changes in the production methods shall be made until the required product is obtained. Blasting and handling of the rock shall be controlled to minimize the development of small fractures. Techniques such as the use of low density powders, sloped blast holes, removal of the previously blasted materials developed between each shot, and minimizing the height from which rock is dropped during loading and processing will be required to produce the specified materials.

5. The General Layout: The work is shown on the drawings.

B. MATERIALS:

1. General: Stone for Type-X and quarry-run material shall be sound, durable limestone, free from cracks, seams, shale partings, and overburden spoils and shall be supplied form a source and geological unit listed hereinafter.

2. Type-X: Type-X stone shall be tabular blocks of sound durable limestone with relatively uniform thickness. Variation in the thickness of individual stones shall be less than 0.25'. Type-X stone shall meet the dimensions specified in this section and possess a minimum Specific Gravity of 2.5 and a maximum LA abrasion loss of 40. Type-X stones shall be sized within the following limits: The dimensions of individual stones shall be measured along 3 mutually perpendicular directions. The thickness (smallest dimension) shall be between a minimum of 9-inches and a

maximum of 18-inches. The length (longest dimension) shall be at least 3 times the stone thickness. The width (intermediate dimension) shall be at least 2 times the stone thickness. At least 75% of the Type-X stone placed must be within 2-inches of the same nominal thickness.

3. Quarry-run rock shall be composed of tough, durable particles. Quarry-run rock shall be well graded between the maximum and minimum sizes specified with intervening sizes well represented. The upper limit of size for this material shall not exceed the layer thickness required. Not more than 15 percent shall pass the 2-inch sieve. Elongation: Stone for quarry-run shall be approximately of equal dimension in cross section and relatively free from flat and elongated pieces. The quantity of stone having an elongation ratio greater than 3 shall not exceed 5 percent by weight

4. Deleterious substances: These include soft friable particles, objectionable materials, shale and other foreign matter, and shall not exceed 5 percent by weight.

C. SOURCES AND APPROVAL OF MATERIALS: Quarry-run materials shall be produced from sources listed in this section. The source proposed for use shall be designated not less than 10 days before starting stone protection operations.

Approved Rock Sources for quarry-run material:

Damon Pursell Liberty, MO 816-792-1031 816-926-0300	Rock Ridge Quarry NW ¼ Sec.23, & NW ¼ Sec. 26 T48N, R33W Jackson County, MO	Winterset ledge and lower 17' Bethany Falls ledge
APAC Sugar Creek, MO 816-380-5170 816-257-2222	Limpus Quarries Sec. 24, T50N, R32W Jackson County, MO	lower 16' of Bethany Falls and lower 17' Winterset ledges
Hunt Midwest Mining Kansas City, MO 816-455-3876	Randolph Quarry SW1/4 Sec.2, T50N, R32W Clay County, MO	upper 13.6' Winterset and lower 16' Bethany Falls ledges
Hunt Midwest Mining Kansas City, MO 816-455-3876	West Lawrence Quarry SW1/4 Sec.1, T13S, R18E Douglas Co, KS	Leavenworth and Toronto ledges

N.R. Hamm Perry, KS 785-598-5111	North Lawrence Quarry E1/2 Sec35, T11S, T19E Jefferson Co, KS	Leavenworth and Toronto ledges
Missouri Rock, Inc Independence, MO 816-781-6459	Orrick Quarry NW ¼ Sec.14, T51N, R29W Ray County, MO	lower 8' Bethany Falls and lower 8' Winterset ledges
Ideker, Inc St. Joseph, MO 816-364-3970	Amazonia Quarry NW ¼ Sec.19 & SW ¼ Sec. 18 T59N, R35W Andrew County, MO	upper 5.7' Kereford ledge

(a) Materials may be furnished from any of the above listed sources or at the option of the Contractor may be furnished from any other source designated by the Contractor and approved by the Contracting Officer, subject to the conditions hereinafter stated.

(b) Listing of a materials source is not to be construed as approval of all material from the source. The right is reserved to reject materials from certain localized areas, zones, strata, or channels when such materials are unsuitable as determined by the Contracting Officer. Materials produced from an approved source shall meet all the requirements of these specifications.

(c) After the award of the contract, the Contractor shall designate in writing only one source or combination of sources from which he proposes to furnish each material. If the Contractor proposes to furnish material from a source or from sources not listed above, he may designate only a single source or single combination of sources for the material. Stone protection materials shall be sampled and tested as specified hereinafter and as required by the Technical Provisions. If a source of material so designated by the Contractor is not approved for use by the Contracting Officer, the Contractor may not submit for approval other sources but shall furnish the material from an approved source listed above at no additional cost to the Government. The source proposed for use shall be designated within 10 calendar days of the date of receipt of Notice to Proceed. Service records and samples for acceptance testing shall be provided as required hereinafter.

(d) The geological rock unit of other sources submitted for stone protection shall have, as a

minimum, a suitable 5 year service record on similar sized stone protection material exposed to shoreline conditions in a similar climatic region. The Contracting Officer will determine what is suitable for an adequate service record. Service record documentation shall include date used, where used, identification of ledges used, names of previous users, gradation produced, quantities produced since last tested, and result of most recent tests identified hereinafter. In addition to an acceptable 5 year service record, as determined by the Contracting Officer, the Contracting Officer has the option to have representative samples taken and tested.

(e) Approximately one sample per 1-1/2 feet of face and from each bed 8 inches or greater in the entire vertical face of the ledge to be quarried shall be taken by the Contractor in the presence of a Government representative. The samples shall be approximately 8- to 14-inch cubes and shall be marked in order, starting with number one at the top of the quarry face. Samples shall be delivered to a commercial laboratory certified to perform the required tests by the Corps of Engineers, Waterways Experiment Station, Concrete and Materials Division, Structures Laboratory, Vicksburg, Mississippi, 30 days in advance of the time the materials will be needed in the work. These samples will be subjected to the freezing and thawing test under Corps of Engineers specification CRD-C-144 and to the specific gravity and absorption tests under Corps of Engineers specification CRD-C-107. Since the performance of these samples in the test will be affected by the presence of moisture, the extent of "drying out" and the amount of incipient fractures in the rock due to blasting shock, every effort shall be made to obtain samples from a quarry face that are truly representative of actual job production. At least 60 percent of the quarry face as represented by individual samples shall show individual losses of less than 25 percent, and the average loss of all samples shall be less than 25 percent.

Type-X Stone may be available from the following sources:

Damon Pursell Liberty, MO 816-792-1032 816-926-0300	Rock Ridge Quarry NW ¼ Sec.23, & NW ¼ Sec. 26 T48N, R33W Jackson County, MO	Winterset ledge and lower 17’ Bethany Falls ledge
N.R. Hamm Perry, KS 785-598-5111	North Lawrence Quarry E1/2 Sec.35, T11S, T19E Jefferson Co, KS	Leavenworth and Toronto ledges

APAC- Kansas City Division Tim Elliott 913-238-1916 913-814-6700		Argentine or Farley ledge
Hunt Midwest Mining Kevin Altec 913-583-3311 816-935-2654	Sunflower Quarry	Spring Hill ledge
Martin-Marietta Aggregates Peculiar, MO 816-779-5522	Peculiar Quarry	Block Limestone

The list of potential Type-X stone suppliers is not exclusive. It is preferable but is not a requirement to select Type-X stone from a ledge approved for quarry-run material. The Contractor may select a source from the Approved Quarry-run source list, from the list of potential Type-X suppliers or may propose an alternate source for Type-X stone in a written submission to the Contracting Officer. The Contracting Officer shall make final determination of the acceptability of Type-X stone from any source.

D. PLACEMENT: Quarry-run rock: Quarry-run rock shall be placed to the full layer thickness measured normal to the excavated channel floor in one operation and in such manner as to minimize segregation and avoid displacing the underlying material. Quarry-run rock shall be placed in a manner that will produce a well-keyed and stable mass of rock. Distribution shall be obtained by selective loading at the source of material and controlled dumping at the site, or by other approved methods. Stone shall be placed by means of truck, gradall, skip box, clam, rock bucket, or orange peel, without rehandling and by such means as to avoid segregation. No other method of placing quarry-run rock shall be used without written approval of the Contracting Officer and the approval will be contingent upon the Contractor's continued ability to provide an acceptable finished layer.

Type-X: Type-X stone shall be placed over the quarry-run rock within the area shown on the drawings. Each Type-X stone shall be placed against adjacent stones as shown on the details. Each stone shall be lowered to essentially the final position. Lifting lugs are permissible but if used,

the lifting lug shall be cut-off flush with the stone after placement. Individual stones may require manual prying for final stone positioning. The Contractor shall minimize disturbance of the underlying quarry-run rock during placement of Type-X stone by implementation of appropriate construction sequencing, equipment selection, and placement methods. If, in the opinion of the Contracting Officer, the placement of Type-X stone results in unacceptable disturbance of the quarry-run rock layer, the Contractor shall adjust the Type-X stone placement method so as to reduce the disturbance of the quarry-run rock layer to an acceptable level. If the quarry-run rock layer is, in the opinion of the Contracting Officer, unacceptably disturbed by the operations of Contractor, the Contracting Officer may direct the Contractor to correct unacceptably disturbed quarry-run rock by removing any Type-X stones overlying the affected area and redistributing the quarry-run rock into the proper layer thickness and gradation or adding additional quarry-run rock as necessary, and then replacing the Type-X stone at no additional expense to the government. The entire area designated for Type-X shall be covered trying to obtain as much rock-to-rock contact as is possible. No stones shall be left standing on edge. Stones in their final position shall be oriented such that the flatter portion will be parallel to the channel grade. The Type-X stone shall be placed in a manner to avoid leaving lateral gaps greater than 6 inches. The Contracting Officer may direct the Contractor to place smaller stones in excessively large gaps between irregular stones as necessary. Tracked or any other equipment that may damage the rock is prohibited from being operated on the Type-X stone either in the stockpile, during placement, or after it has been placed. The final surface of the placed Type-X stone layer shall be within 3-inches of the profile of the baseline shown on the drawings.

E. QUALITY CONTROL: Tests shall be performed on the stone protection materials to determine if the materials meet the gradation, elongation, and deleterious substances requirements specified herein. The Contractor shall furnish all labor, equipment, and tools for sampling and testing stone materials. Elongation tests will be run on the quarry-run material only. In determining the elongation ratio, the thickness is defined as the shortest dimension measured perpendicular to the line established as the length and within the middle one-half (two quarters) segment of that line. If the materials fail to meet the gradation, elongation, or deleterious substances requirements, the Contractor shall remove all in-place materials which are representative of the failing test and shall replace those material with acceptable materials at no additional expense to the government. The Contractor shall then adjust the plan of operations and the method used in processing, loading, and handling of materials and shall notify the Contracting Officer any time production methods are changed. Materials from tests shall be placed in the work if the materials meet the specification requirements. The Contracting Officer will select random loads for truckload gradation tests of the quarry-run rock. Tests will be performed in accordance with the following requirements.

1) Number of tests required: The following number of tests will be performed. Only those tests that meet all of the specification requirements will be considered as part of the minimum number of tests required.

Type of test	Material	Minimum No. of Tests required	Minimum Size of test
Truckload	Quarry-run	4	10 tons
In-Place	Type X	5	25' x 25'

a) Type-X in-place test shall consist of demarcation of the test area at locations selected by the Contracting Officer and measuring the dimensions of thickness, width, and length on each Type-X stone completely within the test area. If the materials fail to meet the dimension specifications, or deleterious substances requirements, the Contractor shall remove all in-place materials which are representative of the failing test and shall replace those materials with acceptable materials at no additional expense to the government. The Contractor shall then adjust the plan of operations and the method used in processing, loading, handling, and placing of materials and shall notify the Contracting Officer any time production methods are changed.

b) The material from two initial quarry-run gradation tests that meet specifications requirements shall be placed in a well-marked area, one at the quarry and one at the project site to serve as visual models of acceptable material.

2) Additional tests: Elongation and deleterious substance tests will be made on each gradation sample of quarry-run material tested and deleterious substances tests will be made in conjunction with each Type-X in-place test. Whenever there is reason to believe that materials do not meet specified requirements, additional tests will be performed as required.

F. MAINTENANCE: The Contractor shall maintain the stone protection until the project is completed and any material displaced by any cause, except as provided in the paragraph: DAMAGE TO WORK of the Special Clauses, shall be repaired to the lines and grades shown on the drawings as directed.

G. SCALES AND WEIGHHOUSE shall be as in SECTION: CRUSHED STONE BASE COURSE.

H. MEASURE AND PAYMENT: Quarry-run rock and Type-X stone shall be weighed, and

waybills and/or delivery tickets, signed by a public or bonded weighmaster, shall be submitted during the progress of the work. In lieu of weighing on scales previously described, weighing may be done on public or other scales, which have been approved by the Contracting Officer and certified by the State where the scales are located. Waybills shall be submitted only for the materials actually used in the work.

I. COMPUTATION OF QUANTITIES: Quantities of quarry-run rock and Type-X stone will be computed in tons (2,000 pounds). The computations will be based on the waybills and delivery tickets submitted and the accumulative total of the respective items will be rounded off to the nearest 0.1 ton.

J. BIDDING SCHEDULE ITEMS applicable to work covered by this section are as follows:

Item	Unit
"Riprap, Type X"	ton
“Quarry-run Rock”	ton

* * * * * *

2246 GEOSYNTHETHIC WALL REINFORCEMENT

A. GENERAL

1 SUMMARY

Work includes Publishing and installing geosynthetic reinforcement to the lines and grades designated on the plans.

2 RELATED DOCUMENTS

a. Section 02276 - Segmental Retaining Wall Units
b. Section 02712 - Drainage Aggregate

3 REFERENCE STANDARDS

a. ASTM D 4595 - Tensile Properties of Geotextiles by the Wide-Width Strip Method
b. ASTM D 4632 - Tensile Properties of Geotextiles
c. ASTM D 5262 - Tension Creep Testing of Geosynthetics
d. GRI:GGI - Single Rib Geogrid Tensile Strength
e. NCMA SRWU-l - Determination of Connection Strength between Geosynthetics and Segmental Concrete Units
f. NCMA Design Manual for Segmental Retaining Walls
g. Where specifications and reference documents conflict, the Contracting Officer shall make the final determination of applicable document.

4 CERTIFICATION

a. Contractor shall submit a notarized manufacturer's certification, prior to start of work, stating that the geosynthetic reinforcement meets the requirements of this specification, SD13-FIO-RE.

5 DELIVERY, STORAGE AND HANDLING

a. Contractor shall check the geosynthetic reinforcement upon delivery to assure that the proper grade and type of material has been received. A product certification should be provided with each shipment.

b. The geosynthetic reinforcement shall be stored above -20'F.

c. Contractor shall prevent excessive mud, wet cement, epoxy and like materials which may affix themselves, from coming in contact with the geosynthetic material.

d. Rolled geosynthetic material shall be stored in accordance with the manufacturer's recommendations.

6 MEASUREMENT AND PAYMENT : The geosynthetic wall reinformcement shall be incidental in the cost of the modular block walls and a separate cost item is not provided in this specification.

B PRODUCTS

1 SUMMARY

a. Geosynthetic reinforcement shall be a polymer product specifically manufactured as a retaining wall soil reinforcement element that meets the requirements of this specification and is one of the following approved manufacturers:

1 . Tensar Geogrid
2. Mirafi Miragrid
3. Stratasystems Stratagrid
4. Huesker Fortrac

b. Concrete segmental retaining wall (SRW) units are as detailed on the drawings and specified under Section 02276 - Segmental Retaining Wall Units.

c. Unit fill is a free-draining granular material as specified under Section 02276 - Segmental Retaining Wall Units or low strength unreinforced concrete.

d. Infill material is the soil used within the reinforced soil mass.

e. Common backfill is the soil behind the reinforced soil mass.

f. Foundation soil is the soil below the reinforced soil mass

and bearing pad.

2. GEOSYNTHETIC REINFORCEMENT PROPERTIES

The geosynthetic reinforcement shall possess the following minimum design properties, determined by product specific testing as defined in the NCMA Design Manual for Segmental Retaining Walls (Section 3.5).

Index Tensile	Strength (Min)	ltds	C	Cds
Geogrid	4200 lb/ft	1353 lb/ft	0.6	1.00

Connection strength requirements as specified in Section 2.1.C.3 - Segmental Retaining Wall Units (see Section 02276)

C EXECUTION

1. FOUNDATION SOIL PREPARATION

a. Foundation soil preparation shall be as specified in Section 02276 - Segmental Retaining Wall Units.

2. WALL ERECTION

Wall erection shall be as specified in Section 02276 - Segmental Retaining Wall Units.

3. GEOSYNTHETIC REINFORCEMENT INSTALLATION

a. The geosynthetic reinforcement shall be installed at the wall height, horizontal location, and to the extent as shown on the project construction plans, or as directed by the Contracting Officer.

b. The geosynthetic reinforcement shall be laid horizontally on compacted infill material and connected to the concrete SRW units. Embedment detail shall be consistent with the detail utilized in evaluation of connection strength, as tested per NCMA SRWU- 1.

c. Correct orientation (roll direction) of the geosynthetic reinforcement shall be verified by the Contractor.

d. Place segmental unit and fill in accordance with Section 02276 - Segmental Retaining Wall Units.

e. The geosynthetic reinforcement shall be pulled taut and free of wrinkles prior to placement of soil fill. The geosynthetic may be secured in place with staples, pins, sandbags, or fill as required by fill properties, fill placement procedures, or weather conditions, or as directed by the Contracting Officer.

f. The procedure for tensioning geosynthetic reinforcement shall be uniform throughout wall length and height.

g. Overlaps:

1.Overlap of the geosynthetic reinforcement in the design strength direction will not be permitted. The design strength direction is that length of geosynthetic reinforcement perpendicular to the wall face and shall be one continuous piece of material.

2 . If required, overlaps of adjacent rolls shall be in accordance with manufacturer's recommendations. Geosynthetic reinforcement will be continuous throughout wall length, except for curves; see drawings.

4 FILL PLACEMENT OVER GEOSYNTHETIC REINFORCEMENT

a. Reinforced wall fill material shall be placed in maximum 8-inch compacted lifts on the geosynthetic reinforcement or as directed by the Contracting Officer.

b. The geosynthetic reinforcement shall be pretensioned by hand to remove wrinkles. Tensioning is usually facilitated by the use of steel rakes. Apply constant tension to each section of geosynthetic reinforcement until soil fill has been placed. Soil fill shall be placed, spread, and compacted in such a manner that prevents the development of wrinkles and/or movement of the geosynthetic reinforcement.

c. Only hand-operated compaction equipment shall be allowed within 3 ft of the front wall face.

d. Where possible, soil fill shall be placed from the wall face outward to insure that the geosynthetic reinforcement remains taut. Soil shall be placed in uniform lifts.

e. Tracked construction equipment shall not be operated directly on the geosynthetic reinforcement. A minimum fill thickness of 8 inches is required prior to operation of tracked vehicles over the geosynthetic reinforcement. Turning of tracked vehicles should be kept to a minimum to prevent tracks from displacing the fill and damaging the geosynthetic reinforcement.

f. When in accordance with manufacturer's recommendations, rubber-tired equipment may pass over the geosynthetic reinforcement at slow speeds, less than 10 mph. Sudden braking and sharp turning shall be avoided.

g. Surface drainage during, and after construction of the wall shall be provided to minimize water infiltration in the reinforced soil zone.

****

02270 EROSION CONTROL

A. General: The Contractor shall provide erosion control for all areas disturbed during construction. The City has prepared a set of guidelines and procedures for controlling erosion entitled "Erosion and Sediment Control Specification" official document number 940108 adopted March 18, 1994. This document is available for purchase at the permit counter on the 18th Floor of City Hall, for $6.00 per copy. The Contractor is to assume that the work is to be done under the City's General Permit. The Contractor does not need to make separate application with the Missouri Department of Natural Resources.

B. Erosion Control Plan: The Contractor shall prepare an erosion control plan which shall be presented to the Contracting Officer, SD07-GA-RE. This plan shall, as a minimum, indicate the location and types of erosion control measures to be utilized throughout the project.

The prime Contractor is responsible and obligated for adding additional erosion control measures as needed if unforeseen erosion problems arise or if submitted plan does not function as intended. The requirements of the plan shall be the prime Contractor's responsibility until the plan is properly completed, modified or voided.

The prime Contractor who is awarded the contract has the responsibility of adding additional erosion control measures as needed if unforeseen erosion problems arise or if the submitted plan does not function as intended. The requirements of the plan shall be the prime Contractor's responsibility until the plan is properly completed, modified or voided.

C. Payment: Payment for straw bale fence and silt fence shall be made at the contract unit price per linear foot of "Erosion Control" as listed in the contract proposal. Such payment and price shall constitute full compensation for all the labor, materials, and equipment necessary to complete the item.

Graded Berms are to be considered subsidiary to other items in the Proposal, and they are only to be placed at the threat of forecasted or anticipated precipitation.

D. See pages 00270-2 through 00270-4 of the project manual for details of the "Straw Bale Fence," "Silt Fence" and "Berm."

02276 MODULAR BLOCK WALL

A. GENERAL

1. Scope: The work covered by this section consists of furnishing and installing a modular block retaining wall with a soil reinforcing system, and the construction of a leveling pad for the facing units. Included are the provision of modular units; soil reinforcement, specialty fill materials (as required); backfill to the lines and grades shown on the contract drawings; and all appurtenant items required for the construction of the retaining wall system.

(a) Contractor shall submit construction drawings and design calculations for the retaining wall system prepared and stamped by a professional Engineer in the state of Missouri. Design, techniques and material evaluations shall be in accordance with the NCMA design manual and other documents stated below, SD01-GA-EC, SD04-GA-EC.

(b) Work includes furnishing and installing modular block wall (MBW) units to the lines and grades designated on the construction drawings or as directed by the Contracting Officer.

(c) Work includes preparing foundation soil, furnishing and installing leveling pad, unit drainage fill and backfill to the lines and grades shown on the construction drawings or as directed by the Contracting Officer.

(d) Work includes furnishing and installing geogrid soil reinforcement. The type, size, location, and lengths shall be determined by the contractor and submitted with the construction drawings and design calculations for the retaining wall system. Geogrid soil reinforcement shall be used on any wall 3 feet or higher, at a mininium.

2. Related Sections

(a) Section 02246 - Geosynthetic Wall Reinforcement
(b) Section 02712 - Drainage Aggregate

3. Reference Standards

(a) American Society for Testing and Materials (ASTM)

1. ASTM C 33 - Concrete Aggregates
2. ASTM C 90 - Load Bearing Concrete Masonry Units
3. ASTM C 140 - Sampling and Testing Concrete Masonry Units
4. ASTM C 145 – Solid Load-Bearing Concrete Masonry Units

5. ASTM C 150 – Portland Cement

(b) National Concrete Masonry Association (NCMA)

1. NCMA TEK 50A - Specifications for Segmental Retaining Wall Units
2. NCMA SRWU 1 - Determination of Connection Strength between Segmental Concrete Units
3. NCMA SRWU-2- Determination of Shear Strength between Segmental Concrete Units
4. NCMA Design Manual for Segmental Retaining Walls

(c) Geosynthetic Research Institute (GRI)

1. GRI-GG1 Geogrid Rib Tensile Strength
2. GRI-GG2 Geogrid Junction Strength
3. GRI-GG3 Tension Creep Testing of Geogrids
4. GRI-GG4 Determination of Long Tern Design Strength of Geogrids
5. GRI-GG5 Determination of Geogrid (soil) Pullout

(d) Where specifications and reference documents conflict, the Contracting Officer shall make the final determination of applicable document.

4. Certification: The Contractor shall submit a notarized manufacturer's certification prior to start of work stating that the MBW units meet the requirements of this specification, SD13-FIO-RE.

5. Quality Assurance

(a) Contractor shall check the materials upon delivery to assure that specified type, grade, color and texture of MBW unit has been received.

(b) Contractor shall prevent excessive mud, wet concrete, epoxies, and like materials which may affix themselves from coming in contact with the materials.

(c) Contractor shall protect the materials from damage. Damaged material shall not be incorporated into the reinforced soil wall.

(d) Contractor shall submit a list of five (5) previously constructed projects of similar size and magnitude by the wall installer where the specific retaining wall system has been constructed successfully. Contact names and telephone numbers shall be listed for each project.

6. Submittals

(a) Experience : The work shall be accomplished by a Contractor experienced in, and employing, personnel experienced in this type of work. The Contractor completing the installation shall submit to the Contracting Officer for apporval documnetaiton substantiating a minimum of 3 years experience of simlar construction. The Contractor shall furnish records of past successful experience in performing this type of work in similar type soil conditions, SD04-FIO-RE.

(b) Samples : the Contractor shall supply two samples of the modular concrete units proposed for this construction, and four 12” by 12” samples of the proposed soil reinforcement material for the review of the Contracting Officer (SD14-GA).

(c) Manufacturer’s certification: certified manufacturer’s test report shall be provided to verify that all materials and components of the wall ssytem are in compliance with the applicable specification (SD13-GA).

B. PRODUCTS

1. Modular Block Wall Units

(a) MBW units shall be machine formed concrete blocks specifically designed for retaining wall applications.

(b) MBW units shall meet the following architectural requirements:

1. Finish of units shall be split-faced.
2. Unit faces shall be of beveled geometry.
3. Units shall be erected with a running configuration.
4. All units shall be sound and free of cracks or other defects that would interfere with the proper placing of the unit or significantly impair the strength or permanence of the construction. Cracking or excessive chiping can be grounds for rejection.
5. Color shall be concrete grey.

(c) MBW units shall meet the following structural requirements:

1. Concrete used to manufacture MBW units shall have a minimum 28 day compressive strength of 4000 psi in accordance with ASTM C 90. The concrete shall have adequate freeze/thaw protection with a maximum moisture absorption rate, by weight, of 7%.
2. Units shall be positively interlocked to provide a minimum shear capacity A_u 2400 lb/ft and λ_u= 17.4 as tested in accordance with NCMA SRWU-1.
3. Units shall provide a minimum connection strength between it and the geosynthetic reinforcement of a_{cs} = 720 lb/ft and λcs = 39.6 degrees as tested in accordance with NCMA SRWU-2, if required.
4. MBW units molded dimensions shall not differ more than ±1/16 inch.

(d) MBW units shall meet the following constructability and geometric requirements:

1. Units shall be capable of attaining concave and convex curves.
2. Units shall be positively engaged to the unit below so as to provide a minimun of 3/32 inch horizontal setback per vertical foot of wall height.
3. Units shall be positvely engaged to the unit below so as to provide a maximum of ½ inch horizontal setback per vertical foot of wall height.

(e) MBW units shall be one of the following approved manufacturers:

1. Keystone Retaining Wall Systems
2. Versa-Lok Retaining Wall Systems
3. Rockwood Retaining Wall Stystems
4. Allan Block Retaining Wall Systems

2. Shear Connectors

(a) Shear connectors shall be 1/2 inch diameter thermoset isopthalic polyester resin-pultruded fiberglass reinforcement rods or equivalent to provide connection between vertically and horizontally adjacent units. Strength of shear connectors between vertical adjacent units shall be applicable over a design temperature of 10 degrees F to + 100 degrees F.

(b) Shear connectors shall be capable of holding the geogrid in the proper design position during grid pre-tensioning and backfilling.

3. Leveling Pad and Unit Fill Material

(a) Leveling Pad shall be constructed in accordance with SECTION: CAST-IN-PLACE CONCRETE and details shown on the contract drawings. The compressive strength of the concrete for the leveling pads shall be
4000 psi.

(b) Fill for units shall be free draining gravel or drainage fill.

(c) Do not run mechanical vibrating plate companctors on top of the units. Compact unit fill by running hand-operated compaction equipment just behing the unit. Compact to minimum 95% standard Proctor density (ASTM D 698)

4. Drainage Aggregate

(a) Drainage layer material shall be ¾" clean, angular crushed rock.

(b) Verticle drainage layer behind the wall face shall extend the entire geogrid length. In walls less than 3 feet in height where geogrid is not used, one cubic foot, minimum, of drainage fill shall be used for each square foot of wall face. Drainage fill shall be placed within cores of, between, and behind units to meet this requirement.

(c) Contractor shall submit reinforced fill sample and laboratory test results to the Contracting Officer for approval prior to the use of any proposed reinforced fill material.

5. Infill Soil

(a) The infill soil and drainage aggregate are the same for this wall.

(b) The infill soil shall be free of debris and organic material and consist of ¾"crushed rock. The maximum particle size shall be 4 inches. There shall be less than 20% by weight of particles greater than 1 ½ inches maximum, 5% by weight passing the #200 sieve and PI<20.

(c) The infill soil shall be compacted in a maximum of 8 inch lifts to the following minimum densities (percentage of the maximum standard Proctor) (ASTM D 698): i) fine grained (ML-CL, SC, SM) soils to a minimum of 95%; and ii) coarse grained (GP, GW, SW, SP) soils to a minimum of 98%.

6. Geogrid Soil Reinforcement

(a) Geosynthetic reinforcement shall consist of geogrids manufactured specifically for soil reinforcement applications and shall be manufactured from high tenacity polyester yarn or high density polyethylene. Polyester geogrid shall be knitted from high tenacity polyester filament yarn with a molecular weight exceeding 25,000 Meg/m and a carboxyl end group values less than 30. Polyester geogrid shall be coated with an impregnated PVC coating that resists peeling, cracking, and stripping.

(b) Ta, Long Term Allowable Tensile Design Load, of the geogrid material shall be determined as follows:

Ta = Tult / (RFcr*RFd*RFid*FS)
Ta shall be evaluated based on a 75 year design life.

1. Tult, Short Term Ultimate Tensile Strength
Tult is based on the minimum average roll values (MARV)

2. RFcr, Reduction Factor for Long Term Tension Creep
RFcr shall be determined from 10,000 hour creep testing performed in accordance with ASTM D5262. Reduction value = 1.60 minimum.

3. RFd, Reduction Factor for Durability
RFd shall be determined from polymer specific durability testing covering the range of expected soil environments. RFd = 1.10 minimum.

4. RFid, Reduction Factor for Installation Damage

RFid shall be determined from product specific construction damage testing performed in accordance with GRI-GG4. Test results shall be provided for each product to be used with project specific or more severe soil type. RFid = 1.10 minimum.

5. FS, Overall Design Factor of Safety

FS shall be 1.5 unless otherwise noted for the maximum allowable working stress calculation.

(c) The maximum design tensile load of the geogrid shall not exceed the laboratory tested ultimate strength of the geogrid/facing unit connection as limited by the "Hinge Height" divided by a factor of safety of 1.5. The connection strength testing and computation procedures shall be in accordance with NCMA SRWU-1 Test Method for Determining Connection Strength of SRW.

(d) Soil Interaction Coefficient, Ci

Ci values shall be determined per GRI:GG5 at a maximum 0.75 inch displacement.

(e) Manufacturing Quality Control

The geogrid manufacturer shall have a manufacturing quality control program that includes QC testing by an independent laboratory. The QC testing shall include:
Tensile Strength Testing
Melt Flow Index (HDPE)
Molecular Weight (Polyester)

(f) Soil reinforcement material shall be resistanr to ultraviolet radiation, biological degradation, naturally encountered chemicals, alkalies, and acids. Soil reinforcement material shall meet the minimum material ppropoerties consistent with those required by modular wall suplier for reinforcement of the earth retained by the wall.

7. Common Backfill

(a) Soil placed behind the infill can be any inorganic soil with a liquid limit less than 50 and plasticity index less than 30, or existing soil on site.

(b) Backfill shall be compacted to a minimum 90% of maximum standard Proctor density (ASTM D 698).

C. EXECUTION

1. Excavation

(a) Contractor shall excavate to the lines and grades shown on the project grading plans. Contractor shall take precautions to minimize over-excavation. Over-excavation shall be filled with compacted infill material, or as directed by the Contracting Officer, at the Contractor's expense.

(b) Contracting Officer will inspect the excavation and approve prior to placement of bearing pad material.

(c) Excavation of deleterious soils and replacement with compacted infill material, as directed by the Engineer, will be paid for at the contract unit prices.

(d) Over-excavated areas in front of wall face shall be filled with compacted existing soil at the Contractor's expense, or as directed by the Contracting Officer.

(e) Contractor shall verify location of existing structures and utilities prior to excavation. Contractor shall ensure all surrounding structures are protected from the effects of wall excavation.

(f) Contractor shall notify Contracting Officer if existing wall is exposed for verification of assumed conditions.

2. Leveling Pad Construction

(a) Leveling pad shall be placed as shown on the construction drawings with a minimum thickness of 6 inches.

(b) Foundation soil shall be proof rolled and compacted to 95% of standard Proctor density and inspected by the Contracting Officer prior to placement of leveling pad materials.

(c) Leveling pad shall be prepared to insure intimate contact of retaining wall unit with pad.

3. Modular Block Unit Installation

(a) First course of MBW units shall be placed on the leveling pad. The units shall be checked for level and alignment. The first course is the most important to insure accurate and acceptable results.

(b) Insure that units are in full contact with base.

(c) Units are placed side by side for full length of straight wall alignment. Alignment may be done by means of a string line or offset from base line to a molded finished face of the MBW unit. Adjust unit spacing for curved sections according to manufacturer's recommendation.

(d) Install shear connectors (if applicable).

(e) Place unit fill (if applicable).

(f) Place and compact fill behind and within units.

(g) Place geogrid soil reinforcement (if applicable).

(h) Clean all excess debris from top of units and install next course. Ensure each course is completely filled prior to proceeding to next course.

(i) Lay each successive course ensuring that shear connectors are engaged.

(j) Repeat procedures to the extent of the wall height.

(k) Upper most row of MBW units or caps shall be glued to underlying units with an adhesive, as recommended by the manufacturer.

4. Delivery, Storage and Handling:

(a) General : The Contractor shall check all materials upon delivery along with accompanying product certificaiton before accepting delivery.

(b) Storage: All components shall be properly stored on wooden risers, or other approved methods to avoid contact with mud or deleterious materials which could damage the components.

(c) Soil Reinforcement Material: Soil reinforcement material shall be stored above –20 degrees F. Rolled Soil reinforcement material may be laid flat and stored outside fora maximum period of 30 days. For extended storage, soil reinforcement material shall be stored in an enclosure or covered iwth tarpaulin to prevent long-term exposure.

5. Measurement And Payment

(a) Measurement of the MBW units is on a vertical square yard basis.

(b) Payment for modular wall will be made at the contract unit price per square yard for "modular wall", which price shall constititue full compensation for furnishing all plant, labor, materials and equipment required to construct the wall, complete, to the lines and grades shown on the contract drawings. Included in the contract price shall be any required excavation, level pads, the wall units, reinforced geogrid, drainage pad, and incidentals.

(c) Quantity of retaining wall may be increased or decreased at the direction of the Contracting Officer based on construction procedures and actual site conditions

6. Bidding Schedule Item applicable to the work covered in this section are as follows :

Item	Unit
"Modular Wall"	square yard

****

SECTION 02300

SEEDING AND MULCHING

PART 1 GENERAL

1.1 SCOPE

This section covers seeding and mulching, complete.

1.2 AREAS

All overbank areas along the existing channel where existing cover is removed or destroyed, the designated Fill Areas, as well as the slopes, crown, and work areas adjoining the channel, shall be seeded and mulched.

1.2.1 Environment Protection

Any area disturbed solely for the convenience of the Contractor, as determined by the Contracting Officer, shall be seeded and mulched and will be considered as protection of the environment.

1.3 SUBMITTALS

Government approval is required for all submittals with a "GA" designation; submittals having an "FIO" designation are for information only. The following shall be submitted in accordance with SECTION 01330: SUBMITTAL DESCRIPTIONS:

SD-13, Certificates

Para. 2.6.3; GA-PM-PR Para. 2.6.4; FIO-RE

SD-01, Data

Para. 2.1; FIO-RE

SD-14, Samples

Para 2.6.2; GA-RE

1.4 Review of Contractor Proposed Changes

Any Contractor-proposed changes to the seed mixes, mulch, fertilizer, seeding dates, seeding operations and other seeding operations or procedures shall be submitted in writing to the Contracting Officer for review and approval by KCD’s Environmental Resources Section, Planning Branch, (CENWK-PM-PR), ATTN: Martin Schuettpelz, telephone no. 816-983-3134, FAX no. 816-426-2124.

PART 2 MATERIALS

2.1 FERTILIZER

Fertilizer, with the specified quantities/ratios of nitrogen, phosphoric acid, and potash, uniform in composition, free-flowing and suitable for application with approved equipment, shall be provided. The fertilizer shall

be delivered to the site in bags or other convenient containers, fully labeled or otherwise designated in accordance with the applicable State fertilizer laws, and bearing the name, trade name or trademark, and warranty of the producer. Fertilizer may be supplied in bulk provided an analysis of samples tested in a laboratory is furnished for each shipment of fertilizer delivered to the project.

2.2 MULCH

Mulch materials shall be air dry, reasonably light in color, and shall not be musty, moldy, caked or of low quality. Mulch shall be grass hay or straw of cereal grain such as oats or wheat. Materials containing objectionable weed seeds or other species detrimental to the planting or the adjacent land uses will not be acceptable.

2.3 MULCH TACKIFIERS

2.3.1 Organic Mulch Tackifier

Organic mulch tackifier shall be a high viscosity guar gum that would granulate at 90 percent minimum through 100 ASTM mesh screen and at 40 percent maximum through 350 ASTM mesh screen. Organic mulch tackifier shall have a minimum cold water viscosity of 3000 Centipoise (cps) after hydrating for 15 minutes when mixed at 1 percent as measured by the Brookfield RVT instrument at 20 RPM. Product shall be readily dispersible in cold water and mix without producing lumps.

2.3.2 Asphalt adhesives shall not be used with any of the seeding or mulching.

2.4 SEED

Seed shall be labeled in accordance with U.S. Department of Agriculture Rules and Regulations under the Federal Seed Act. Seed shall be furnished in sealed, standard containers unless approved by the Contracting Officer. Seed that is wet or moldy or that has been otherwise damaged in transit or storage will not be acceptable. The seed mixtures and pounds of pure live seed to be used shall be those listed below.

2.4.1 Permanent Cover Seed Mixtures

Native seed mixture is to be used within the permanent and temporary rights-of-way along the overbank, and on Designated Fill Areas G, D, and E2.

A. Native Seed Mixture

Switchgrass (Cave-in-the-Rock variety) (Panicum virgatum)	12
Prairie dropseed (Sporobolus heterolepis)	2
White Dutch clover (inoculated)	2
Purple coneflower (Echinacea purpurea)	.25
Black-eyed Susan (Rudbeckia hirta)	.25
Maxmillian sunflower (Helianthus maximilliani)	.25
Prairie blazing star (Liatris pycnostachya)	.25
Total Pounds Pure Live Seed Per Acre	17

Any changes to the native seed mixture must be approved in advance by PM-PR (Martin Schuettpelz, 816-983-3134).

Permanent seed mixture for all other areas:

Plant Species	Minimum Pure Live Seed (%)	Pounds of Pure Live Seed/Acre
Alta fescue or Kentucky 31 fescue (Festuca elatior var. arundincea)	75	25
Ryegrass (Lolium Perenne or L. multiflorum)	80	25
Kentucky bluegrass (Poa pratensis)	75	20
Creeping red fescue (Festuca rubra)	85	10
Total Pounds Pure Live Seed Per Acre		80

2.4.2 Temporary Cover Seed Mixture

Plant Species	Pounds of Bulk Seed/Acre
Oats (Avena sativa)	60
Total Pounds Bulk Seed/Acre	60

Temporary seed may be planted in the spring, summer, or fall, but planting shall be sequenced such that the permanent cover is applied within 6 months of the temporary mix application. Temporary seed mix shall be applied to all disturbed areas as soon as practicable when the final plan grade has been established outside the specified planting seasons. Temporary mix shall also be applied on all disturbed areas with slopes greater than 1 on 10 where construction is halted and will not resume within 21 days. If disturbed areas with slopes less than 1 on 10 (including Fill Areas) have been brought to final grade, no further construction activities will likely occur on the site, and the planting dates are appropriate, the appropriate permanent seed mixture shall be seeded as soon as possible.

2.4.3 Weed Seed

Weed seed shall not exceed 0.5 percent by weight of the total of pure live seed and other material in the mixture.

2.4.4 Pure Live Seed

The following formula shall be used to determine the amount of commercial seed required to provide in each kind of seed the specified quantities of pure live seed.

$$\frac{\text{Pure Live Seed} \times 100 \times 100}{\text{Purity} \times \text{Germination}} = \text{Pounds Commercial Seed Required}$$

2.5 WATER

Water used in seeding operations shall be free from oil, acid, alkali, salt, and other substances harmful to growth of grass, and shall be from a source approved prior to use.

2.5.1 Optional Watering of Seeded Areas

The Contractor shall water all areas seeded with a permanent seed mixture, both the “native” and “other” seed mixtures at the option and direction of the Contracting Officer. Seeded areas shall be considered watered when the top 1” of soil has been thoroughly moistened. Watering of seeded areas must not cause removal or rearrangement of the seed, soil bed, or mulch. The Contractor shall restore and reseed any seeded areas that are damaged due to the Contractor’s watering operations in the opinion of the Contracting Officer. The Contractor shall restore any damaged sites using the designated seed mixture for the affected site.

2.6 QUALITY CONTROL

2.6.1 Fertilizer

The Contracting Officer shall be furnished duplicate copies of invoices showing quantities and grade of fertilizer. Upon completion of the project, a final check of total quantities of fertilizer used shall be made against total area treated. If minimum rates of application have not been met, additional quantities of material to make up minimum application specified shall be distributed as required.

2.6.2 Mulch

At least 30 days prior to commencing seeding operations, the Contracting Officer shall be notified of sources from which mulch materials are available and the quantities thereof, and representative samples of the materials proposed for use shall be submitted for approval. No mulch material may be applied without the Contracting Officer's specific prior approval.

2.6.3 Organic Mulch Tackifier

The Contracting Officer shall be furnished copies of manufacturer's specification for organic mulch tackifier and certification of conformance with the rigid requirements of the manufacturer with respect to moisture content, pH, dispersibility, granulation, viscosity, and mixing properties.

2.6.4 Seed

The Contracting Officer shall be furnished signed copies of statement from the suppliers, certifying that each container of seed delivered complies with specified requirements and is labeled in accordance with Federal Seed

Act and is at least equal to the requirements previously specified. This certification shall be furnished on or with all copies of seed invoices. Each lot of seed will be tested by the Government in accordance with latest Rules and Regulations under the Federal Seed Act, at the discretion of the Contracting Officer.

PART 3 EXECUTION

3.1 PREPARATION OF GROUND SURFACE

3.1.1 General

Equipment, in good condition, shall be provided for the proper preparation of the ground and for handling and placing all materials. Equipment shall be approved before work is started.

3.1.2 Clearing

Prior to grading and tilling, vegetation that may interfere with operations shall be mowed, grubbed, and raked; the collected material shall be disposed of by the disposal methods specified in SECTION: EARTHWORK. The surface shall be cleared of stumps, roots, cable, wire, and other materials that might hinder the work.

3.1.3 Grading

Previously established grades shall be maintained on the areas to be seeded in a true and even condition; necessary repairs shall be made by adding soil as necessary to previously graded areas. Where grades have not been established, the areas shall be graded as shown, and all surfaces shall be left in an even and properly compacted condition to prevent formation of depressions.

3.1.4 Tillage

After the areas required to be treated have been brought to the grades shown, the soil shall be tilled to a depth of at least 3 inches by disking, harrowing, or other approved methods until the condition of the soil is acceptable. After tillage, all stones larger than 3 inches in diameter and other materials that might hinder the work or subsequent maintenance shall be cleared. The work shall be performed only during periods when, in the opinion of the Contracting Officer, beneficial results are likely to be obtained. When drought, excessive moisture, or other unsatisfactory conditions prevail, the work shall be stopped when directed.

3.1.6 Fertilizer

For all areas, seeded fertilizer with a 1:4:3 ratio (e.g., grade 6-24-18) of the active ingredients of nitrogen, phosphoric acid, and potash shall be distributed uniformly over areas to be seeded. Fertilizer shall be applied at a rate of 12, 48, and 36 pounds per acre of the respective active ingredients. Fertilizer shall be incorporated into the soil to a depth of at least 2 inches by disking, harrowing, or other acceptable methods. Regardless of the grade of bulk fertilizer provided, the application rate shall be varied to obtain the quantity of active ingredient of nitrogen, phosphoric acid, and potash specified. Incorporation of fertilizer may be

part of the tilling operation. Use of equipment capable of sowing seed and distributing fertilizer at the same time will be acceptable, pending approval of the equipment by the Contracting officer and PM-PR (Schuettpelz).

3.1.7 Leveling

Surface irregularities resulting from tillage, fertilizing, or other operations before seeding shall be leveled prior to seeding.

3.2 PLANTING SEED

3.2.1 General

A satisfactory method of sowing at the specified rate shall be employed, using approved mechanical power-drawn drills or seeders, mechanical hand-seeders (not acceptable for native seed mixture or Manchester Trafficway), or other approved methods. When drills are used, markers or other means shall be provided to ensure that the successive seeded strips will overlap or be separated by a space no greater than the equipment's drill row spacing. When delays in operations extend the work beyond the most favorable planting season for species designated, or when conditions are such by reason of drought, high winds, excessive moisture, or other factors that satisfactory results are not likely to be obtained, work shall be halted as directed and resumed only when conditions are favorable or when approved alternate or corrective measures and procedures have been effected. If inspection during seeding operations, or after there is show of green, indicates that areas have been left unplanted, additional seed shall be sown as directed.

3.2.2 Seeding Dates

The native grass seeds in the Native Seed Mixture (Section 2.4.1) shall be sown between the dates of 20 March to 15 June, unless otherwise approved by the Contracting Officer and PM-PR (Mr. Schuettpelz).

The permanent mixture for “other areas” (Section 2.4.1) shall be sown between the dates of 15 March to 15 June for spring planting and 15 August to 1 October for fall planting, unless otherwise approved by the Contracting Officer.

Temporary cover seed mixture (Section 2.4.2) shall be seeded between the dates of 15 March to 1 November, unless otherwise approved by the Contracting Officer.

3.2.3 Drill Seeding (Native Seed Mixture)

The native seed mixture shall be seeded with a drill (Truax, Billion, or equivalent) equipped with double coulter furrow openers with depth bands and press wheels. Drill shall be equipped with at least two boxes—one capable of handling light, fluffy seeds and the other for handling the smaller heavier seeds. Native grass seed (excluding flowers) shall be drilled ¼ to ½-inch deep and then rolled with a weighted roller or cultipacker. Seeds of the four native wildflower species shall not be drilled deeper than 1/8-inch and shall be applied separately if necessary, then rolled with a weighted roller or cultipacker.

3.2.4 Drill Seeding

Drill seeding of the “other areas” mixture and temporary cover seed may be accomplished with approved equipment with drills set not more than 8 inches apart. Seed shall be sown uniformly over designated areas to an average depth of 1/2 inch and at the specified rate. Half of seed shall be sown with seed drill moving in one direction, and the remainder with the drill moving at right angles to the first sowing. When slopes to be drill seeded exceed 1 on 5, the seeder shall be equipped with baffle plates spaced not more than 6 inches apart in the seed box.

3.2.5 Not Used

3.2.6 Broadcast Seeding (Not acceptable for Native Seed Mixture)

In areas inaccessible to drill seeding, seed shall be broadcast either by hand or with approved seeding equipment, as specified hereinbefore. Seed shall be distributed uniformly over designated areas. Half of seed shall be sown with sower moving in one direction, and the remainder with sower moving at right angles to first sowing. Seed shall be covered to an average depth of 1/4 inch by brush harrow, spike-tooth harrow, chain harrow, cultipacker, hand rake with wood tines, or other approved device. Seed shall not be broadcast during windy weather.

3.2.7 Preparation for Native Seed Planting

In areas where temporary seed has been planted, the Contractor shall initially spray the area with a herbicide (glyphosate) applied according to the manufacturer’s recommendations. The temporary cover growth shall then be mowed to a height of 6 to 8 inches above the ground surface.

3.3 APPLYING AND ANCHORING MULCH

3.3.1 General

Mulch shall be spread uniformly in a continuous blanket over the seeded areas. Application rate of mulch shall be 2 ½ tons per acre for all seed mixtures. Mulching shall be started at the windward side of relatively flat areas, or at the upper part of a steep slope and continued uniformly until the area is covered. Mulch shall be spread by hand or any of the following.

3.3.1.1 Blower Type Mulch Spreader

Blower type mulch spreader, which shall be trailer-mounted, equipped with a blower that is dynamically balanced for at least 2,000 revolutions per minute operation and that will discharge hay or straw mulch material through a discharge boom with spout at speeds up to 220 feet per second. The discharge spout shall be capable of 360-degree horizontal rotation and minimum of 60degree range of elevation and depression.

3.3.2 Mechanical Anchoring

Immediately following spreading, the mulch shall be anchored to the soil by land packers or other suitable equipment. Land packers shall be of the scalloped-disk type, designed to force mulch into the soil surface. The

number of passes needed, not to exceed three, will be determined by the Contracting Officer.

3.3.3 Spray Anchoring with Hydroseeder

After applying mulch to slopes, the Contractor shall use a hydroseeder equipped with paddle mixer and pumping equipment to apply a mix of approved tackifier and fiber marker mulch to bind the mulch together with the soil. Water from an approved source shall be added to the tank to cover the agitator blades. Tackifier meeting the specifications of Section 2.3 shall be added to the tank and allowed to mix. Tackifier shall be used at the following rates based on the slope of the area treated.

Slope:	Flat	4:1	3:1	2:1	1:1
Lb/Acre:	40	45	50	60	70

After tackifier is thoroughly mixed, Contractor shall add 300 lbs. per acre of virgin wood fiber mulch manufactured by approved suppliers, such as SilvaFiber, Conwed 2000, Mat Fiber, Central Fiber, to aid in binding the mulch and providing a visual aid for determining coverage of the tackifier. The above quantities of tackifier and mulch marker are based on 1000 gallons of water per acre coverage.

Tackifier and wood fiber mulch shall be applied with fan nozzles thru hydroseeder mounted towers or hose where tower application cannot provide adequate coverage.

3.4 REPAIRING AND RESEEDING

The Contractor shall be fully responsible for any damage or lack of cover caused by elements under his control. The Contracting Officer may direct that areas that do not attain the required cover or areas that become damaged by repaired and reseeded to specification requirements. If such lack of cover is determined to be caused by no fault of the Contractor, equitable adjustment will be made in the contract price for the additional work directed and performed.

3.5 MOWING

Mowing prior to completion of the construction may be required and shall be performed at the option of the Contracting Officer. Vegetation shall be prevented from growing to heights exceeding one foot in order to permit native seed to germinate properly. Mowers shall be set to cut growth back to a height of 6 inches. Areas to be mowed shall be determined by the Contracting Officer and PM-PR.

3.6 MEASUREMENT AND COMPUTATION OF QUANTITIES

3.6.1 Measurement

The various areas that are satisfactorily seeded, or seeded and mulched, shall be measured along the slope to the nearest foot.

3.6.2 Computation of Quantities

Computation of quantities will be made in acres based on the measurements submitted. Each quantity will be computed to the nearest one-tenth acre based on the accumulative total.

3.7 BIDDING SCHEDULE ITEM

Bidding schedule item, applicable to the work covered by this section, is as follows:

Item	Unit
"Seeding and Mulching"	Lump Sum

-- End of Section --

02440 TRAFFIC SIGNS

A. GENERAL. The work covered by this section consists of furnishing and installing complete in place, signs of sheet aluminum or galvanized sheet steel, all with a reflective sheeting background and with sign bracket arms, bolts, and fittings to erect the signs in accordance with these specifications, ANSI 06.1, and in reasonably close conformity with the dimensions and lines shown on the plans. Posts supporting signs shall be in accordance with the paragraph: GALVANIZED STEEL SIGN POSTS. Traffic signs shall meet all applicable requirements of the "Manual on Uniform Traffic Control Devices for Streets and Highways", U.S. Department of Transportation, Federal Highway Administration, edition of 1988, herinafter referred to as “MUTCD”, except as modified on the Plans and as described herein.

B. MATERIAL.

1. GENERAL. All materials will be subject to inspection for acceptance as to condition at the latest practicable time the Contracting Officer has the opportunity to check for compliance prior to or during incorporation of materials in the work.

2. QUALITY. Materials shall meet the requirements specified -Led hereinafter.

3. SIGN PANELS.

a. Sheet Aluminum. Sheet aluminum signs shall be ASTM B 209 alloy 6061-T6 with mill finish. Thickness and dimensions shall be as shown on the plans. Hole sizes and locations shall match square sign posts. The sheet aluminum shall be free of all corrosion, white rust, and dirt. All panels shall be flat and straight within commercial tolerances established by the aluminum industry.

b. All Sign Faces are to be made in accordance with the detailed drawings as shown in ANSI D6.1, as shown on the plans, and International *Standards*.

4. SIGN SUPPORT ARMS AND FITTINGS.

a. Materials.

a. (1) Sheet Aluminum. sign support arms for aluminum signs shall be extruded aluminum in conformance with ASTM B 221, alloy 6061-T6. Thickness and dimensions shall be as shown on the plans. Male sizes and locations shall match sign panels and square sign posts.

b. Fabrication. Fabrication of all signs, bracket arms, and fittings shall be accomplished in a uniform and workmanlike manner. All fabrication, including cuttings, shearing,. and punching, shall be completed prior to metal degreasing, etching, and application of reflective sheeting. All parts shall be cut to sizes and shape and shall be free of buckles, warp, dents, cockles, burrs, and all defects resulting from fabrication.

5. FASTENERS. Signs shall be mounted by use of cadmium plated or galvanized bolts, nuts, and washers of the size and type as shown on the plans. Flat washers shall be used under each nut to prevent gouging. Bolts shall be round headed with screw driver slots.

6. REFLECTIVE SHEETING.

a. Description. The reflective sheeting shall consist of spherical lens elements embedded within a transparent plastic having a smooth, flat outer surface. The sheeting shall be weather resistant and have a protective precoated adhesive backing.

b. Requirements. Reflective sheeting shall meet the requirements of Federal Specification L-S-300, for specified Type, Class, Reflectivity, and Color with the following exceptions.

(1) Color. Visual comparison with the colors shown and specified in the MUTCD shall indicate compliance for specified color.

(2) Uniformity. The surface appearance of the sheeting shall be uniform. There shall be no streaks, discoloration or other condition that will cause the sheeting to show a non-uniform appearance when examined at a distance of fifty (50) feet, in daylight or at night in the light from an automobile head lamp. In a single sign, variations in color or reflectivity of the sheeting noticable at a distance of not less than 50 feet under day or night conditions shall be cause for rejection of the sign.

(3) Specular Gloss. When measured with an 85° Gloss Meter, Type I sheeting shall have a specular gloss reading of not less than 40. Gloss shall be measured according to Federal Standard Test Method 141/6103.

(4) Reflective Intensity. The reflective intensity shall be determined by the method specified in Section 4.4.7, Federal Specification L-S-300.

(5) Shrinkage. When tested as specified in 4.4.11 of Federal Specification L-S-300A the sheeting 'shall not shrink more than one thirty-second (1/32) of an inch in ten (10) minutes or more than one-eigth (1/8) of an inch in twenty-four (24) hours.

(6) Accelerated Weathering.

When subjected to twelve-hundred (1200) hours of accelerated weathering the sheeting shall be substantially equal in appearance to the weathered sheeting. There shall be no more, than a slight loss of gloss and no evidence of cracking, scaling, pitting, delamination, edge lifting or curling or more than one thirty-second (1/32) of an inch of shrinkage or expansion. The lens elements shall show no cocking or other deterioration except that a slight etching or crazing of the elements will be permitted.

> Accelerated weathering will be conducted in a twin arc ATLAS WEATHEROMETER operated according to ASTM E 42, Apparatus D, with the following exceptions:
>
> At the end of each twenty (20) hour cycle the panels will be placed in a cold cabinet at approximately 0 F. for one (1) hour. After removal from the cold cabinet the panels will be returned to the weatherometer to await the start of the next cycle.

Water used in the-- weatherometer will be city water softened to a total hardness content of less than five (5) parts per million expressed as calcium carbonate.

7. GALVANIZED STEEL SIGN POSTS. Sign posts shall be made from new galvanized steel conforming to the requirements of ASTM A 446, commercial quality. The posts shall weigh, before punching, not less than three (3) pounds per linear foot, of post length. Posts shall be punched on the center line of the web while hot. The holes shall be three-eighths (3/8) inch in diameter and shall be punched one (1) inch apart on centers starting one (1) inch from the top of the post and extending down for six (6) feet. Posts shall be hot dipped galvanized in accordance with the requirements of ASTM A 123. Galvanizing shall be done after fabrication and punching or drilling of holes is completed. Posts shall be painted green after galvanizing.

C. FABRICATION AND CONSTRUCTION OF TRAFFIC SIGNS.

1. DEGREASING. Sheet aluminum signs that require reflective sheeting shall be degreased by one of the following methods.

a. Vapor Degreasing - by total immersion of the sign in a -saturated vaoor of trichlorethylene or perchlorethylene.
b. Alkaline Degreasing - by total immersion of the sign in a tank containing alkaline solutions, controlled and titrated to the solution manufacturer's specification. Immersion time shall depend upon the amount of soil present. Rinse thoroughly with running water.
c. Alkaline Degreasing - by steam cleaning with alkaline solutions in accordance with the solution manufacturer's instructions. Rinse thoroughly with running water.

2. ETCHING. Etching will be required on sheet aluminum. one of the following methods shall be used.

a. Acid Etch. Material shall be well etched a minimum of 3 minutes in a 6 to 8 percent phosphoric acid solution at 100 Degrees F., rinsed thoroughly with running cold water and followed with a hot water tank rinse of I minute in water heated to 180 Degrees F.

b. Alkaline Etch. The precleaned aluminum surface shall be etched in an alkaline etching material that is controlled by titration, with time, temperature, and concentration specified by the solution manufacturer. It shall then be rinsed thoroughly. Smut shall be removed with an acidic, chromium compound type solution -as specified by the solution manufacturer and the surface rinsed thoroughly. Panels shall be dried by use of a forced hot air or by rapid evaporation induced by a hot water or steam rinser. Metal shall not come in contact with greases, oils, or other contaminants prior to the application of reflective sheeting.

3. APPLICATION OF REFLECTIVE SHEETING. Sheeting shall be applied to properly treated base panels with mechanical equipment in a manner as specified below. Type II adhesive coated sheeting shall be pre-perforated.

a. Vacuum Application. Reflective sheeting shall be applied to all sheet sign faces by an approved vacuum applicator. The precoated adhesive on the back of the sheeting shall be activated by a minimum temperature of 185 Degrees F., and the sheeting shall be evenly attached to the sign face by the diaphragm of the vacuum applicator which applied continuous even pressure and evacuates with a minimum vacuum pressure of 2511 of mercury all air between the sheeting and the sign face. This operation shall be in accordance with the recommendations of the manufacturer of the reflective sheeting. After aging for 48 hours at 75 Degrees F., the adhesive shall form a bond equal to or greater than the strength of the reflective sheeting.

b. Continuous Roll Application. Reflective sheeting on any sign face longer than the maximum dimension of the vacuum .applicator shall be applied to sign faces by approved continuous roll application using pressure in conformity with the manufacturer's recommendation. For Type II adhesive coating sheeting application, the applicator shall be capable of mechanically metering the correct amount of activating solvent evenly distributing it on the adhesive precoated back of the reflective sheeting. The sheeting shall be applied in a continuous operation over the entire surface of the sign and shall result in a surface free of air pockets or bubbles.

c. Sign Faces comprising two or more pieces or panels of reflective sheeting must be carefully matched for color at the time of sign fabrication to provide uniform appearance and brilliance, both day and night. Alternate, successive width sections of either sheeting or panels must be reversed and consecutive to insure that corresponding edges of reflective sheeting lie adjacent on finished sign. Non uniform shading and an undesirable contact between adjacent widths of applied sheeting will not be acceptable.

d. At Splices Type I adhesive coated sheeting shall be overlapped not less than 3/16 inch. Type II adhesive coated sheeting shall be butt spliced, gam not to exceed 1/64 inch. only butt splices shall be permitted on any sign screen processed with transparent color.

e. Maximum Allowable Splices of reflective sheeting on sheet aluminum signs:

24” height sign (and under)	No splices
36” height sign	I horizontal or 1 vertical splice
48” height sign	I horizontal or 2 vertical splices

4. FINISHING SHEET ALUMINUM SIGNS. Following the application of-the reflective sheeting background, messages and border shall be screened by the silk screen process. Colors shall conform to the requirements of the plans and as set forth in ANSI D6.1. Following the screening of the background, message, and border, and the application of the face, the sign face splices and edges shall be sealed with materials supplied and in a manner specified by the sheeting manufacturer. The finished signs shall show careful workmanship and have a smooth and uniform light surface. All letters and numbers shall be clear and sharp.

5. LOCATION AND POSITIONING OF SIGNS. All signs shall be located and erected as shown on the Plans. Unless otherwise shown, signs shall be erected so that the sign face is vertical and at the deflection angle of 87 Degrees from the center of the lane which the sign serves and the direction of travel. Where lanes are on curves, sign faces shall be on a deflection angle of 87 Degrees to the tangent of the curve. Care shall be exercised in the erection of all signs to eliminate of minimize specular reflection. After installation of the signs is completed, they shall be further inspected at night by the Engineer. If specular reflection is apparent on any sign, its positioning shall be adjusted by the Contractor at his expense to eliminate or minimize this condition.

D. CONSTRUCTION OF GALVANIZED STEEL SIGN POSTS

The steel posts shall be constructed in reasonably close conformity with the lines, dimensions and locations shown on the Plans. Any parts of steel posts from which galvanizing has been knocked or chipped off down to bare metal shall be regalvanized, metalized or painted with an approved zinc dust-zinc oxide paint.

E. BASIS OF PAYMENT

Payment for permanent traffic signs, posts shall be made, lump sum. Such payment and price shall include full compensation for all labor, materials and equipment necessary to complete this item.

Items	Unit
"Traffic Intersection Signal Work"	lump sum

* * * * * * * * * *

SECTION 02466A

DRILLED FOUNDATION CAISSONS (PIERS)
12/97

PART 1 GENERAL

1.1 REFERENCES

The publications listed below form a part of this specification to the extent referenced. The publications are referred to in the text by basic designation only.

AMERICAN SOCIETY FOR TESTING AND MATERIALS (ASTM)

ASTM A 615/A 615M	(1996a) Deformed and Plain Billet-Steel Bars for Concrete Reinforcement
ASTM C 33	(1999a) Concrete Aggregates
ASTM D 1143	(1981; R 1994e1) Piles Under Static Axial Compressive Load
ASTM D 1586	(1999) Penetration Test and Split-Barrel Sampling of Soils

AMERICAN WELDING SOCIETY (AWS)

AWS D1.1	(1998) Structural Welding Code - Steel
AWS D1.4	(1998) Structural Welding Code - Reinforcing Steel

1.2 BASIS OF BID AND UNIT PRICES

1.2.1 Bids

The bid shall be based on the number and total length of caissons, established by top and bottom elevations and diameters, as indicated and specified. Adjustment to the contract will be made in accordance with CONTRACT CLAUSES, should the total length of caissons installed and approved be greater or less than the total length shown. The Contractor will not be allowed payment for rejected caissons or for those not conforming to specifications.

1.3 BASIS OF PAYMENT

1.3.1 Lump Sum

The work covered by this specification is incidental to the bid item New Prospect Bridge.

1.4 SUBMITTALS

Government approval is required for submittals with a "G" designation; submittals not having a "G" designation are for information only. When used, a designation following the "G" designation identifies the office that will review the submittal for the Government. The following shall be submitted in accordance with Section 01330 SUBMITTAL PROCEDURES:

SD-04 Shop Drawings

Caissons; GA-EC

Detailed records in an approved form, for each caisson, showing shaft diameters, top and bottom elevations, bearing strata description, casing description, water conditions, concrete strength, concrete volume, rock elevations, dates of excavation and concrete placement, penetration test results, and other pertinent information. Upon completion of caisson work, the Contractor shall provide a record of centerline locations based on the survey of the registered surveyor or engineer provided by the Contractor. In addition, corrective measures shall be similarly recorded. A complete tabulation of all records pertaining to approved caissons shall be delivered to the Contracting Officer.

SD-06 Test Reports

Penetration Tests; GA-EC

SD-08 Statements

Plan of Operations; GA-EC

A detailed plan of operations shall be submitted to the Contracting Officer and work shall not begin until the submittal has been approved. The submittal shall include, as a minimum, acquisition, storage and protection of the drilled pier construction materials; details of equipment proposed for use in drilled pier site investigation and construction including details as to the rated torque and down-pressure of the excavation equipment; details of methods proposed for measurement of the vertical plumbness of drilled piers during excavation; proposed mitigation procedures to address piers found to be out plumb tolerances as specified herein; and details of the proposed concrete mix, mixing procedures, and placement procedures during installation.

SD-13 Certificates

Caissons; GA-RE

A certified copy of the survey. Lines and levels shall be established and caisson centerline locations staked and maintained by a registered surveyor or engineer provided by the Contractor.

Qualifications; GA-EC

Qualifications of the foundation system Contractor shall show that he has been engaged in the successful installation of drilled foundation caissons for at least 5-years.

SD-18 Certificates

Drilled Foundations Caissons; GA-EC

Detailed records in an approved form, for each drilled excavation and Caisson, including:

a. Excavated and constructed shaft diameters and top and bottom elevations;

b. Casing descriptions;

c. Water conditions;

d. Concrete type, mix proportions, strength and volume;

e. Rock Elevations;

f. Dates of excavation and concrete placement; and

g. All other pertinent information.

Upon completion of caisson excavation and installation work, the Contractor shall provide a record of centerline locations based on the survey of the registered surveyor or engineer provided by the Contractor. In addition, corrective measures shall be similarly recorded. A complete tabulation of all records pertaining to approved caissons shall be delivered to the Contracting Officer.

1.5 QUALIFICATIONS

1.5.1 Specialty Subcontractor

The work shall be performed by a specialty subcontractor, specializing in the specified foundation system and having experience installing the specified foundation system under similar subsurface conditions.

1.5.2 Welding

Detail and field welding shall be in accordance with AWS D1.1. Qualification of welding procedures, welders, and welding operators shall be in accordance with AWS D1.1, Section 5. Records of test results of welding procedures not prequalified and copies of records for each qualified welding operator, containing records on positions of welding and types of electrode

qualifications, shall be kept by the Contractor and be available for examination by the Contracting Officer.

1.6 PROJECT/SITE CONDITIONS

1.6.1 Subsurface Data

Subsurface soil data logs are shown on the drawings. See drawing S1.2 for the geologic rock profile at the Prospect Bridge. The subsurface investigation report and samples of materials, as taken from subsurface investigations, are available for examination at the Kansas City District Office, Geotechnical Branch, Geology section, POC Mr. Steve Jirousek at (816) 983-3681.

1.6.2 Caisson Drilling Equipment

Caisson drilling equipment shall have the minimum torque capacity and downward force capacity for the contract site conditions.

1.7 SEQUENCE OF WORK

1.7.1 Caisson Excavation

Excavation of caissons or groups of caissons shall be performed so that reinforcing steel and concrete placement is a continuous operation performed the same day that the excavation is completed. Excavations shall not be left open overnight.

1.7.2 Acceptance

Concrete shall be placed within 3 hours after approval of the completed excavation.

1.8 SUPERVISION, INSPECTION, AND SAFETY

1.8.1 Contractor Supervision

The Contractor shall provide for the supervision of all phases of drilled pier construction. Supervision shall be the Contractor's responsibility as outlined in Quality Control provisions of the SPECIAL CONTRACT REQUIREMENTS. Each drilled pier excavation shall be checked by the Contractor for its depth, water removal, cleanup, workmanship, and for all tolerance requirements before any concrete is placed.

1.8.2 Government Inspection

The Contracting Officer will inspect each drilled pier excavation. No one shall enter a drilled caisson excavation. Concrete shall not be placed until the excavation has been approved by the Contracting Officer. The Contractor shall furnish the Contracting Officer all necessary equipment required for proper inspection of drilled pier excavations.

1.8.3 Safety Precautions for Workmen and Inspectors

The drilled caisson excavations shall not be entered for inspection or mucking the bottom. If drilled caisson excavations must be entered for any

reason, the Contractor shall submit a plan detailing safe entry, egress, and ventilation procedures to the Contracting Officer for approval that is in accordance with EM-385-1-1.

PART 2 PRODUCTS

2.1 CONCRETE WORK

Concrete materials and concrete work shall be in accordance with requirements of Section: CAST-IN-PLACE STRUCTURAL CONCRETE FOR CIVIL WORKS, except as modified herein:

2.1.1 Coarse Aggregate

Coarse aggregate shall not exceed 40 percent of the total aggregate weight.

2.1.2 Reinforcing Steel

Reinforcing steel shall conform to ASTM A 615 Grade 60. Steel shall be welded into cages in accordance with AWS D1.4 and inserted securely in the caissons, in position and alignment, as shown, prior to concrete placement.

2.1.3 Strength

Concrete strength shall be 4000 psi at 28 days. Slump shall be from 6 to 8 inches.

PART 3 EXECUTION

3.1 PREPARATION

a. Caissons shall be excavated to established depths and dimensions shown on the drawings. Bottoms of caissons shall be cleaned of loose or soft material and leveled. Excavated material shall be disposed of in accordance with Section : CLEARING, GRUBBING AND DEMOLITION.

b. In drilling caissons, the surrounding soil and the earth walls shall be adequately and securely protected against cave-ins, displacement of the surrounding earth, and retention of ground water, by means of temporary steel casings. Casings shall have outside diameters not less than indicated shaft sizes, shall be a minimum of 1/4 inch thick, and shall not be removed if the structural integrity of the caisson will be impaired, as determined by the Contracting Officer. Temporary steel casings shall be withdrawn, as the concrete is being placed, maintaining sufficient head of concrete within the casing to prevent extraneous material from falling in from the sides and mixing with the concrete. Casings may be jerked upward a maximum of 4 inches to break the bottom seal, but thereafter shall be removed with a smooth, continuous motion.

c. The inside of steel casings shall be thoroughly cleaned and oiled before reuse.

d. The temporary casing shall be in place from the caisson top to the ground surface until the concrete has set if the elevation of the top of the caisson is below the adjacent ground surface.

e. The outside diameter of permanent casing shall be the same as the nominal shaft diameter.

f. Water that flows into the excavations shall be continuously removed and all water shall be removed from the excavation bottom, to the extent possible, prior to concrete placement. The maximum permissible depth of water will be 2 inches. In the event of a severe water condition that makes it impossible or impractical to dewater the excavation, concrete shall be placed using underwater tremie after water movement has stabilized.

g. Each caisson excavation will be inspected and approved by the Contracting Officer based on penetration test results and any remote means of examination necessary prior to placing concrete. A record of all inspections, with related construction changes, shall be kept by the Contractor. The Contractor shall provide support personnel for inspection and testing procedures.

3.2 INSTALLATION

a. Concrete shall be continuously placed by methods that ensure against segregation and dislodging of excavation sidewalls, and shall completely fill the shaft. Concrete shall be placed by pumping or drop chutes in dry holes and by tremie or pumping in wet holes. The discharge shall be kept a minimum of 3 feet below the fresh concrete surface during placement. Drilling of caissons or driving of casings shall not be within 20 feet of concrete placed within the last 3 days.

b. Concrete shall be brought to a true level surface inside the shaft and a full width cross key formed, or dowels installed, should it become necessary to interrupt placing concrete in any caisson. Prior to placing additional concrete, surfaces shall be cleaned of laitance and slush with one-to-one portland cement grout. The grout shall have a water-cement ratio not exceeding that of the concrete.

c. not used

d. Concrete shall be vibrated for full height of caisson.

3.3 TOLERANCES

a. Any caisson out of center or plumb beyond the tolerance specified shall be corrected as necessary to comply with the tolerances and the Contractor shall bear any cost of correction.

b. Cross sections of shafts shall not be less than design dimensions.

c. Caissons shall be installed with top location deviating no more than a maximum of 3-inches from centerline locations.

d. Vertical caissons shall be installed plumb within a maximum deviation of 1-1/2 inches for the first 10 feet and within l/2 inch for each 10 feet of additional depth.

3.4 PENETRATION TESTS

Penetration Tests shall conform to the following:

a. After excavation, penetration tests in the bottoms of the caissons, in all caissons, to determine bearing conditions, shall be made in accordance with ASTM D 1586.

b. The tests shall be made after caisson bottoms have been cleaned out. Minimum blow count for acceptable foundation shall be 50 blows per 0.5 feet. The Contractor shall obtain and retain jar samples, as directed by the Contracting Officer.

c. If the minimum blow count is not obtained, the shaft shall be drilled an additional 2.0 feet and the penetration test rerun. If the second penetration test in any caisson excavation fails to obtain the minimum blow count, the Contracting Officer shall determine final elevation for the caisson bottom.

d. Reports shall be submitted to the Contracting Officer in accordance with ASTM 1586.

The Contracting Officer will approve tests and authorize subsequent concrete placement or initiate redesign procedures.

3.5 PROTECTION

Protection shall be provided around top of the excavation to prevent debris from being dislodged into the excavation and concrete.

-- End of Section --

2500 SANITARY SEWERS

A. General: All sanitary sewer (combined sewer outfalls) construction and materials shall conform to Section 2500 of the APWA "Standard Specifications and Design Criteria", and the KCMO SUPPLEMENTS except as otherwise specified herein and on the contract drawings. Note that all references to "Engineer" in the APWA guidance shall be interpreted as "Contracting Officer" for this contract.

The casing type used under future Paraclete Manor trail shall follow paragraph 2506.4, Method B of APWA. Casing and supports shall be in accordance with manufacturer's recommendations.

B. Payment: Lump sum payment shall be made for the combined sewer outflow system as shown on the drawings, and in the specifications. Payment shall constitute full compensation for all labor, materials, and equipment necessary to complete the item. Payment shall include pipes, manholes, concrete cradles, casings and all other subsidiary items.

* * * * * * * * *

Section	Title	Page No.
2506.3	Detailed Installation Requirements	22
2506.4	Casing and Carrier Conduits	22
2507	BACKFILL	24
2507.1	Scope	24
2507.2	General	24
2507.3	Backfilling in Street or Alley Right-of-Way and Under Pavement	25
2507.4	Backfilling in Areas Other Than Street or Alley Right-of-Way	25
2507.5	Backfill Around Structures	25
2508	RESTORATION	26
2508.1	Scope	26
2508.2	General	26
2508.3	Clean-Up	26
2508.4	Finished Grading	26
2508.5	Seeding	26
2508.6	Sodding	26
2508.7	Pavement Replacement	26
2508.8	Fences	27
2508.9	Walls	27
2508.10	Trees, Shrubs and Bushes	27
2510	MANHOLES AND SPECIAL STRUCTURES	33
2510.1	Scope	33
2510.2	General	33
2510.3	Manhole Materials	34
2510.4	Manhole Site Preparation	37
2510.5	Manhole Excavation	37
2510.6	Manhole Installation	38
2510.7	Manhole Backfilling	40
2510.8	Restoration	40
2510.9	Manhole Testing	40
2511	MEASUREMENT AND PAYMENT	41
2511.1	Measurement	41
2511.2	Payment	42

DIVISION II
CONSTRUCTION AND MATERIAL SPECIFICATIONS
SECTION 2500 SANITARY SEWER

SECTION 2501 Scope:

This Division governs all work, materials and testing required for installation of gravity and pressure pipelines of the respective types and sizes shown on the Plans for the particular location and conforming to the requirements of these specifications. All pipelines shall be constructed to proper line and grade as shown on the Plans and shall result in an unobstructed, smooth and uniform conduit.

SECTION 2502 General:

2502.1 Description: Sanitary sewer construction shall consist of furnishing all labor, materials and equipment for the complete installation of sewers and appurtenances in accordance with the contract documents, standard drawings, approved shop drawings, General Provisions and these specifications.

2502.2 Specification Modifications: It is understood that throughout this section these Specifications may be modified by appropriate items in the Special Provisions or notes on the Contract Drawings.

2502.3 Revisions of Standards: When reference is made to a Standard Specification i.e. ASTM, ANSI, AWWA, MCIB, the Specification referred to shall be understood to mean the latest revision of said specification as amended at the time of the Notice to Bidders, except as noted on the Plans or in the Special Provisions.

SECTION 2503 Materials:

2503.1 General: This section governs materials that may be required to complete pipeline construction, exclusive of structures, as shown on the Plans and/or as provided for in the Special Provisions.

1. Requirements: Furnish pipe of materials, joint types, sizes, and strength classes indicated or specified. Higher strengths may be furnished at the Contractor's option at no additional cost to the Owner.

2. Manufacturer: The manufacturer shall be experienced in the design, manufacture and commercial supplying of the specific material.

3. Inspection and Testing: Inspection and testing shall be performed by the Manufacturer's quality control personnel in conformance with applicable

standards. Testing may be witnessed by Owner, Engineer, or approved independent testing laboratory. The Contractor shall provide three (3) copies of certified test reports indicating the materials conform to the specifications.

4. Handling: Equipment and methods shall be adequate to protect the pipe, joint elements and prevent shock contact of adjacent units during moving or storage. Damaged sections that cause reasonable doubt as to their structural strength or water-tightness will be rejected.

2503.2 Pipe, Fittings, Joints, Coatings and Linings:

1. General: Furnish pipe and fittings of materials, joint types, sizes, strength classes, coatings and linings as indicated and specified.

2. Acrylonitrile-Butadiene-Styrene (ABS) and Poly (Vinyl Chloride) (PVC) Composite Sewer Pipe and Fittings: Pipe and fittings shall conform to ASTM D 2680, except as otherwise specified herein.

   a. General: Furnish maximum pipe lengths, normally produced by the manufacturer except for fittings, closures and specials. All field cuts that result in an exposed end section shall be sealed in accordance with the manufacturers' recommendation.

   b. Design: Pipe shall consist of two concentric thermoplastic tubes integrally braced across the annulus with resultant annular space filled with inert material to provide continuous support between inner and outer tubes. Bell-end shall be factory attached solvent weld coupling.

   c. Joints: Pipe joints and fittings shall be solvent cement or elastomeric type conforming to ASTM D 2680. Natural rubber gaskets will not be accepted.

   d. Fittings: Fittings defined as tee (T) or wye (Y) connections suitable for assembly to four (4) inch or six (6) inch building service lines shall be bell end with a minimum wall thickness conforming to SDR 35 and shall be provided by the pipe manufacturer. A special design is required for service connections 8 inch and larger. Saddle tees or wyes will not be permitted during sewer main installation.

3. Acrylonitrile-Butadiene-Styrene (ABS) Sewer Pipe and Fittings: Pipe and fittings shall conform to ASTM D 2751, except as otherwise specified here-in.

   a. General: Furnish maximum pipe lengths, normally produced by the manufacturer, except for fittings, closures and specials.

   b. Design: Pipe shall have an integral wall bell and spigot joint and a minimum wall thickness conforming to SDR 23.5.

c. Joints: Pipe joints and fittings shall be solvent-cement or elastomeric conforming to ASTM D 2680. Gaskets for elastomeric joints shall conform to ASTM F477. Joint tightness shall also conform to ASTM D 3212. Natural rubber gaskets will not be accepted.

d. Fittings: Fittings defined suitable for assembly to four (4) inch or six (6) inch building service lines shall be bell-end with a minimum wall thickness conforming to SDR 23.5 and shall be provided by the pipe manufacturer.

4. Ductile-Iron Pipe and Fittings: Pipe and fittings shall conform to ANSI A21.51, except as otherwise specified herein.

a. General: Furnish maximum pipe lengths normally produced by the manufacturer except for fittings, closures and specials.

b. Design: All ductile iron pipe shall meet the requirements of ANSI A21.50 and ANSI A21.51 and shall be of the thickness class specified therein or shown on the drawings.

c. Joints: Mechanical and push-on joints for pipe and fittings shall conform to the requirements of ANSI A21.11. Flanged joints for ductile iron pipe and fittings shall conform to the requirements of A21.10. Gaskets shall be neoprene or other synthetic rubber material. Natural rubber gaskets will not be acceptable.

d. Fittings: Fittings shall be in accordance with ANSI/AWWA C 110 and shall have a pressure rating of not less than that specified for the pipe. Fittings used with ductile iron pipe shall be ductile iron or cast iron. Fittings for pipe with mechanical joints shall have mechanical joints. Fittings for pipe with push-on joints shall have either mechanical joints or push-on joints.

e. Coatings: Pipe and fittings shall be furnished with exterior bituminous coating conforming to ANSI A 21.51.

f. Linings: Pipe and fitting linings shall conform to the following:

(1) Pipe shall have an interior cement-mortar lining conforming to ANSI/A 21.4 or 40 mil polyethylene lining in accordance with ASTM D 1248.

(2) Pipe and fittings shall have an interior coating not less than one (1) mil in thickness which conforms to all appropriate requirements for seal coat in ANSI/A 21.4.

g. Polyethlene Encasement: Pipe and fittings shall be installed with a polyethylene tube encasement having a thickness of 0.008" (8 mils) and conforming to ASTM D-1248, Type 1, Class C, Grade E-1 material.

5. Polyvinyl chloride (PVC) Pressure Rated Plastic Pipe (SDR) and Fittings: Pipe and fittings shall conform to ASTM D 2241, except as otherwise specified herein.

   a. General: Furnish maximum pipe lengths normally produced by the manufacturer, except for fittings, closures and specials. Pipe shall be used only for pressure flow systems.

   b. Materials: The pipe shall be made of PVC plastic pipe having a cell classification of 12454 B or 12454 C as defined in ASTM D 1784.

   c. Design: Pressure flow systems, i.e., force mains, shall have the wall thickness shown on the plans, with a minimum wall thickness not less than SDR 32.5 with a minimum burst pressure not less than 400 psi conforming to pipe materials designation codes PVC 1120, PVC 1220, or PVC 2120.

   d. Joints: Pressure flow systems shall be joined in accordance with ASTM D 3139 with particular attention given to Section 5.3.

   e. Fittings: Fittings for pressure flow systems shall have a minimum wall thickness conforming to SDR 32.5 and a minimum hydrostatic design stress of 400 psi conforming to pipe materials designation codes PVC 1120, PVC 1220, and PVC 2120.

6. Type PSM polyvinyl chloride (PVC) Sewer Pipe and Fittings: 8 through 15 inch diameter pipe and fittings shall conform to ASTM D 3034 and pipe having diameter 18" through 27 inch shall conform to ASTM F679 except as otherwise specified herein.

   a. General: Furnish maximum pipe lengths normally produced by the manufacturer except for fittings, closures and specials.

   b. Materials: The pipe shall be made of PVC plastic having a cell classification of 12454 B or 12454 C or 13364 B as defined in ASTM D 1784.

   c. Design: Pipe shall have an integral bell and spigot joint. Wall thickness shall be SDR 35, SDR 26, or SDR 21 as shown on plans. If for any reason the depth of cover on SDR 35 pipe becomes greater than 15 feet, the contractor shall immediately notify the design engineer.

   d. Joints: Joint tightness shall conform to ASTM D 3212. Joints shall be push-on type only with the bell-end grooved to receive a gasket. Elastomeric seal (gasket) shall have a basic polymer of synthetic rubber conforming to ASTM F 477. Natural rubber gaskets will not be accepted.

e. Fittings: Fittings defined as tee (T) or wye (Y) connections suitable for assembly to four (4) inch or six (6) inch building service lines shall be bell-end with a minimum wall thickness conforming to SDR 35 and shall be furnished by the pipe manufacturer. A special design is required for service connections 8 inches and larger. Saddle tees or wyes will not be permitted during sewer main installation.

7. Reinforced Concrete Pipe and Fittings: Pipe and fittings shall conform to ASTM C 76 except as otherwise specified herein.

a. General: Furnish maximum lengths normally produced by the manufacturer except for fittings, closures and specials.

b. Design: Pipe shall be Class III, Class IV, or Class V, wall B as shown on plans. Fine aggregate shall be natural sand conforming to the requirements of MCIB Section 4 - Materials. Reinforcement may be circular or elliptical. Elliptically reinforced pipe shall be marked in accordance with Section 17.2. ASTM C 76 for correct installation. Modified or special designs are prohibited unless so specified in the Special Provisions.

c. Joints: Pipe and fittings shall be furnished with either spigot groove type joint with O-ring gasket or steel end joint with spigot groove and O-ring gasket conforming to ASTM C 361 and ASTM C 443. The basic polymer for O-ring gaskets shall be synthetic rubber and shall conform to ASTM C 361 and ASTM C 443.

d. Fittings and Specials: Provide strength equal to design D-loads of adjacent pipe and be fabricated as one of the following types:

(1) Steel cylinder segments not less than U.S. No. 16 gauge lined with three-fourths (3/4) inch concrete or mortar and reinforced concrete exterior.

(2) Concrete pipe sections shall be cut while still green, reinforcing exposed and welded together at junctions and miters. Splice shall be built up to nominal wall thickness with mortar or concrete. Miters shall not exceed 30 degrees at deflection angles between segments. Minimum center line curve radius shall not be less than twice the pipe diameter.

8. Vitrified Clay Pipe and Fittings: Pipe and fittings shall conform to ASTM C 700 Extra Strength except as otherwise specified herein.

a. General: Furnish maximum pipe lengths normally produced by the manufacturer with either bell-end or plain-end except for fittings, closures and specials.

b. Joints: All pipe joints shall conform to ASTM C 425 with synthetic rubber

2503.3 Pipe Embedment Materials.

1. Scope: Pipe embedment materials shall be furnished and installed to complete the work shown on the Plans or as called for in the Contract Documents.

2. Bedding Aggregate: All materials used for crushed stone pipe bedding shall conform to the requirements of MCIB Section 4 - Materials for Coarse Aggregate - Table 2, Column III, modified to meet the following graduations:

Sieve Size Gradations	Percentage Passing
No. 4	0-5
No. 8	0-2

3. Concrete for embedment and encasement:

   a. Concrete shall test not less than a twenty-eight (28) day compressive strength of 3000 psi and shall otherwise conform to Section 2510.3.6.

   b. Reinforcing steel when required shall be placed as shown on the Plans and shall conform to Section 2510.3.7.

2503.4 Backfill Materials:

1. Scope: Backfill materials shall be as required and/or permitted to complete the work shown on the Plans or called for in the Contract Documents.

2. Granular Backfill Material: Granular backfill material shall meet the gradation requirements as outlined in Section 2202.2.

3. Select Earth Backfill Material: Select earth backfill shall be finely divided job excavated material free from debris, organic matter, rocks larger than one (1) inch and/or frozen materials.

4. Other Earth Backfill: Other backfill may be job excavated material free from debris and organic matter. No rock greater than one foot in its longest axis, shall be placed in any trench excavation as backfill.

2503.5 Tunneling, Boring and Jacking Materials:

1. Scope: This section governs the furnishing of all materials necessary for the construction of tunnels at locations shown on the Plans or where constructed at the Contractor's option when approved by the Engineer.

2. General: Furnish materials and necessary accessories with strengths,

thicknesses, coatings, and fittings indicated, specified and/or necessary to complete the work.

3. Steel Liner Plate: Steel tunnel liner plates shall be Armco "Standard," Commercial Shearing and Stamping Company "Commercial," Republic "Truscon Paneled Out," or equal and shall be galvanized in accordance with ASTM A 123. The design and shape of the liner plates shall be such that assembly can take place entirely from within the tunnel liner. Liner plates shall be capable of withstanding the ring thrust load and transmitting this from plate to plate. The minimum outside diameter shall be four (4) feet and the minimum wall thickness shall be United States Standard Gauge 12 (0.2046 inches). Sufficient sections shall be provided with one and one-half (1 1/2) inch or larger grouting holes located near the centers so that when the plates are installed there will be one line of holes on either side of the tunnel and one at the crown; the lower line of holes on each side shall not be more than eighteen (18) inches above the invert. The holes in each line shall not be more than five (5) feet apart and unless otherwise approved, shall be staggered. Bolts and nuts shall conform to ASTM A 153, A 307, A 325 and A 449 as applicable. Steel liner plates shall have bolted joints in both longitudinal joints in adjacent rings when assembling.

4. Steel Casings: Steel casings for bored or jacked construction shall be steel pipe conforming to ASTM A 139 with a minimum diameter as shown on the Plans. Corrugated steel casing pipe will be considered on a case-by-case basis.

   a. Minimum wall thickness shall be in accordance with the following table:

Diameter of Casing-inches	Nominal Wall Thickness-Inches Under Railroads	All Other Uses
16	0.312	0.188
18	0.312	0.250
20	0.375	0.250
22	0.375	0.250
24	0.406	0.281
26	0.438	0.281
28	0.469	0.312
30	0.469	0.312
32	0.500	0.312
34	0.500	0.312
36	0.500	0.344

   b. Steel shall be Grade B under railroads and Grade A on all other uses.

   c. Steel pipe shall have welded joints in accordance with AWWA C 206.

5. Reinforced Concrete Pipe: Reinforced concrete pipe used as casing shall conform to ASTM C 76 except as otherwise specified under Section 2503.2.7.

and as specified herein.

a. Design: Provide ASTM C 76 circular pipe of the strength class required for the jacking of pipe when determined by method set forth in the latest printing of Concrete Pipe Design Manual prepared by the American Concrete Pipe Association.

b. Joints: Reinforced concrete pipe used for casing pipe shall be provided with steel end joint with a groove in the spigot end for an O-ring gasket. The O-ring gasket shall be synthetic rubber. Both joint and gasket shall otherwise conform to ASTM C 361.

c. Interior Protection: Interior protection is not required for reinforced concrete pipe used for casing conduit.

6. Casing Conduit Grout: Casing conduit grout shall be a pumpable grout resulting in minimum set strength of 400 psi. in 28 days.

7. Sand: Sand used as fill in casing conduits shall be a clean sand and thoroughly dry. All sand fill shall conform to the requirements under Section 2510.3.6.

8. Wood Skids: Wood skids shall be provided as indicated on the Plans. The wood shall be pressure-treated with a preservative in accordance with ASTM D 1760. Cut surfaces shall be given two (2) heavy brush coats of the same preservative.

SECTION 2504 Site Preparation:

2504.1 Scope: This section governs normal project site preparation for construction.

2504.2 General:

1. Contractor shall do all clearing necessary for performance of his work and shal confine his operations to that area provided through easements, licenses, agreements and rights-of-way. The Contractor's entrance upon any lands outside of that area provided by easements, licenses, agreements or public rights-of-way, shall be at the Contractor's sole liability.

2. The Contractor shall not occupy any portion of the Project Site prior to the date established in the Notice to Proceed without prior approval of the Engineer.

2504.3 Obstructions:

1. General: Natural obstructions, existing facilities and improvements encountered during site preparation shall be removed, relocated, reconstructed or worked around as herein specified. Care shall be used while performing site preparation work adjacent to any facilities intended to remain in place. Except

as otherwise specified, the Contractor shall be responsible for any damage to existing facilities and improvements and any repairs required shall be promptly made at the Contractor's expense. Waste materials shall be disposed of in a satisfactory manner off the work site. Restoration of utilities damaged by the Contractor shall be restored as directed by the utility company at no additional cost to the Owner. Unless otherwise provided in Basis of Payment no separate or additional payment will be made for any work in connection with removal, relocation or restoration of obstructions and existing facilities.

2. Surface Obstructions:

a. Sidewalks, curb and gutter, drainage structures and similar obstructions shall be tunneled under if tunneling is best suited, otherwise the obstruction shall be cut in straight lines or removed to the nearest construction joint if located within five feet of the center-line of the trench. In no case shall the joint or line of cut be less than one foot outside the edge of the trench. Surface obstructions removed to permit construction shall be reconstructed as specified and to the dimensions, lines and grades of original construction. Back-fill of tunneled sections shall be performed in accordance with Section 2507. All restoration shall be in accordance with Section 2508.

b. Mailboxes shall be maintained in the manner that the Postal Service requires to prevent interruption of mail delivery.

c. Site preparation shall include where necessary and permitted the removal of trees, shrubs, brush, crops, and other vegetation within the limits of the easements (right-of-way) or as may be provided for in licenses, permits and agreements. The following procedures for protection of existing greenery are required.

(1) Trees: All reasonable effort shall be made to save as many trees as possible. Trees are defined as six inches in diameter and greater when measured at a point three feet above the ground surface. If trees can be saved by trimming, this shall be done in accordance with acceptable pruning practices.

Trees to be removed shall be completely removed, including stump and large roots, unless such removal may result in damage to existing pipelines. In that event, trees shall be sawn off not more than four (4)

inches above the ground and the stump shall be removed to twelve (12) inches below finish grade. Any tree replaced shall be outside the permanent sewer right-of-way and shall be like species of nursery stock. (Generally, 2 to 2 1/2 inch caliper).

(2) Small Plants and Flowers: At least two weeks prior to the start of construction, property owners shall be notified by the contractor of the proposed starting date. The purpose of this notification is so that the property owners can remove any small plants or flowers that they, the property owners, desire to save.

d. Fences: Fences interfering with construction, and located within public rights-of-way or as may be allowed for in permits or agreements, may be removed by the Contractor only if the opening is provided with a temporary gate that will be maintained in a closed position except to permit passage o equipment and vehicles unless otherwise herein specified. Fences within temporary construction easements may be removed by the Contractor provided that temporary fencing is installed in such a manner as to serve the purpose of the fencing removed. The contractor shall locate and record all fence corners prior to removal. All fencing removed shall be restored by the Contractor to the condition existing prior to construction unless otherwise specified in the Special Provisions. The Contractor is and shall be solely liable for the straying of any animals protected or corralled or other damage caused by any fence so removed.

e. Property Pins: The Contractor shall preserve all property corners, pins or markers. In the event any property corners, pins, or markers are removed by the Contractor, such property points shall be replaced at the Contractor's expense and shall be reset by competent surveyors properly licensed to do such work. In the event such points are section corners or Federal land corners, they shall be referenced and filed with the appropriate authority.

f. Sodded and Landscaped Areas: Sodded and/or landscaped thoroughfares and areas on or adjacent to improved property shall be disturbed only to the extent required to permit construction.Such areas shall not be used as storage sites for construction supplies and insofar as practicable shall be kept free from stockpiles or excavated materials.

3. Subsurface Obstruction:

a. Where existing utilities and service lines are to be encountered, the Owner thereof shall be notified by the Contractor at least 48 hours (not including weekends and/or holidays) in advance of performing any work in the vicinity. All excavation, pipeline installation and backfilling work in the vicinity of such utilities shall be accomplished in the manner required by the respective Owner and, if requested, under their direct supervision. The Contractor shall be responsible for any and all damages to a public or

private utility that may occur as the result of the construction.

b. The Contractor shall make a reasonable effort to ascertain the existence of obstructions and shall locate obstructions by digging in advance of machine excavation where definite information is not available as to their exact location. Where such facilities are unexpectedly encountered and damaged, responsible officials and other affected parties shall be notified and arrangements made for the prompt repair and restoration of service.

c. Private Sewer Facilities: The Contractor shall make every reasonable effort to protect private sewer facilities. They are not shown on the Plans. When these facilities are disturbed or damaged by the work, the Contractor shall make necessary repairs to the facilities for continuous service prior to the close of the work day at no cost to the Owner.

SECTION 2505 Excavation:

2505.1 Scope: This section governs the methods and procedures required for pipeline excavations for open cut and tunneling.

2505.2 General: The terms "excavation" and "trenching" shall mean the removal and subsequent handling of all material required to perform the work.

1. All pipeline excavation work shall be accomplished under supervision of a person experienced with the materials and procedures which will provide protection to existing improvements, including utilities and the proposed pipeline.

2. The alignment, depth, and pipe subgrades of all sewer trenches shall be determined by overhead grade lines parallel to the sewer invert.

3. When pipe is to be installed in embankment or fill, the embankment shall be constructed in accordance with APWA section 2102.6 and shall be built up to a plane at least 18 inches above the top of the pipe prior to the excavation of the sewer trench.

4. The Contractor shall not open more trench in advance of pipe laying than is necessary. Four hundred (400) feet will be the maximum length of open trench allowed on any line under construction. All open trenches shall be adequately protected.

5. In the event hazardous wastes as defined by the Resource Conservation and Recovery Act of 1976 (PL94-580) are encountered, work shall be halted and the Engineer shall be notified. Work shall be resumed only after the Engineer notifies the Contractor. Regulation of removal, handling and disposal of hazardous wastes is the responsibility of Federal and State agencies.

2505.3 Unclassified Excavation: Unclassified excavation is defined as the removal of all material encountered regardless of its nature. All material excavated will be considered as Unclassified Excavation unless the Special Provisions specify Classified Materials.

2505.4 Rock Excavation: Rock excavation is defined as the removal of all rock ledges 6 inches or more in thickness, detached rock or boulders having a volume of more than 1 1/2 cubic yards and shale occurring in its natural state, hard and unweathered. A rock ledge is defined as a continuous body of rock that may include interbedded seams of soft materials. Such interbedded soft material less than 12 inches in thickness will be included in the measurement of rock excavation. Such seams 12 inches or greater in thickness will be included only in the measurement of earth excavation.

2505.5 Earth Excavation: Earth excavation is defined as the removal of all material nc defined as rock.

2505.6 De-Watering: The Contractor shall remove any water that may accumulate or be found in the trenches and other excavations made under the Contract.

The Contractor shall form all dams, flumes or other works necessary to keep the excavation clear of water while the sewers and their foundations, and other foundation works, are being constructed. All water shall be removed from such excavation in a manner that will not damage property.

2505.7 Blasting: When blasting is permitted by the Engineer, the Contractor shall use the utmost care to protect life and property. The Contractor shall comply with all laws, ordinances, and the applicable safety code requirements and regulations relative to the handling, storage and use of explosives and protection of life and property, and he shall be responsible for all damage thereto caused by his or his subcontractor's operations.

The Contractor shall provide insurance as required by the General Provisions and Covenants and Special Provisions before performing any blasting. The governing agency shall be notified at least 24 hours before blasting operations begin.

2505.8 No Blasting Areas: No blasting of any kind for rock excavations or any other purpose will be allowed if so noted on the Plans.

2505.9 Open-Cut Method (Trenching):

1. Scope: This item establishes the requirements to be followed for pipeline excavation performed by the open-cut method (trenching).

2. General: Excavations for pipelines shall be accomplished by the open-cut method (trenching) except as specified or approved by the Engineer. Trenching shall be with a minimum inconvenience and disturbance to the general public.

The Contractor shall sort and stockpile the excavated material so the proper material is available for backfill.

3. Trench Depths: All trenches shall be excavated to depths required for proper pipe embedment. Overdepth excavation shall be required when the subgrade is unstable. Overdepth excavations shall be backfilled with granular pipe embedment material unless otherwise directed by the Engineer.

4. Trench Walls: Undercutting of trench walls is not permitted.

5. Trench Widths:

   a. Minimum Widths: Trench widths and pipe clearances shall be not less than that shown in the following table.

MINIMUM TRENCH WIDTHS
AND PIPE CLEARANCES
(INCHES)

Nominal Pipe Diameter	Trench Width1	Pipe Side Clearance2	Soil/Incompressible Pipe Bottom Clearance
4	22	6	4/6
6	22	6	4/6
8	22	6	4/6
10	24	6	4/6
12	27	6	4/6
15	30	6	4/6
18	34	6	4/6
21	39	7	4/9
24	43	7	4/9
27	48	8	4/9
30	54	8	4/9

1 Measured below a horizontal plane six (6) inches above the top of the pipe line.
2 Measured from the outside face of pipe barrel to inside face of trench.

   b. Maximum Widths: The allowable maximum trench widths hereinafter specified apply only to that portion of the trench below the horizontal plane parallel to and six (6) inches above the top of the pipe.

   The allowable maximum widths may be exceeded at manholes, bore pits, tees, and in unstable earth material. Where the maximum trench width is exceeded the Contractor shall provide the appropriate strength class of pipe embedment to provide safe support strength to the pipeline.

   When trench width exceeds those in the tables shown for Vitrified Clay

Pipe or when the side clearance exceeds two and one-half (2 1/2) times the outside pipe diameter at either side of a flexible conduit, it shall be the Contractor's responsibility at no additional cost to the Owner to provide bedding adequate to develop the required lateral support for the pipe and/or provide a pipe of sufficient strength class to accommodate the loading conditions as approved by the Engineer.

c. Trench Slope: The trench width above a horizontal plane six (6) inches above the top of the pipe may vary and side sloping is permissible unless otherwise specified.

d. Trench Shields: When trench shields are utilized by the Contractor, said shields or any part thereof shall not extend lower than six (6) inches above the top of the proposed pipeline nor shall the maximum allowable trench width be exceeded.

6. Clay Pipe Trench Width Tables: The trench width tables list trench widths that are the minimum and maximum allowed. If the maximum trench width is exceeded, the Contractor shall so inform the Engineer prior to installation of pipe embedment material and/or pipe. Unless otherwise specified, H-20 Truck Loading Tables shall be used. All delays caused by the Contractor's failure to immediately notify the Engineer when overwidth trenching occurs will not be grounds for an extension of the contract time limit or additional payment.

MAXIMUM TRENCH WIDTH (Inches)

Pipe: Extra Strength Vitrified Clay ASTM C 700
Embedment: Class B
Soil: Non-Cohesive (K ' = 0.165) 120 pcf (No Live Load)

	Nominal Pipe Size (inches)								
Cover Depth (feet)	8	10	12	5	18	21	24	27	30
2.5 -10	a	a	a	a	a	a	a	a	a
10 - 12	a	a	a	a	a	a	a	68	71
12 - 14	a	a	42	45	49	54	60	63	65
14 - 16	a	a	40	43	46	51	57	59	62
16 - 18	a	37	39	41	45	50	54	57	59
18 - 20	34	36	38	40	44	48	52	55	57
20 - 22	34	36	37	40	43	47	51	53	56
22 - 24	34	35	37	39	42	46	50	52	54
24 - 26	33	35	37	39	42	46	50	51	53
26 - 28	33	35	36	38	41	45	49	51	53
28 - 30	33	34	36	38	41	45	48	50	52

Cover depths designated "a" are not critical and width does not govern.
Cover depths designated "b" result in loads exceeding safe support strength.

MAXIMUM TRENCH WIDTH (Inches)

.pe: Extra Strength Vitrified Clay ASTM C 700
Embedment: Class B
Soil: Non-Cohesive (K ' = 0.165) 120 pcf (H-20 Truck Loading)

	Nominal Pipe Size (inches)								
Cover Depth (feet)	8	10	12	15	18	21	24	27	30
2.5 -10	a	a	a	a	a	a	a	a	a
10 - 12	a	36	39	45	51	56	62	65	68
12 - 14	a	36	38	43	48	54	58	61	64
14 - 16	a	34	37	43	46	51	57	60	62
- 18	33	34	37	41	45	50	54	57	59
18 - 20	33	34	37	40	44	48	52	55	57
20 - 22	33	34	37	40	43	47	51	53	56
22 - 24	33	34	37	39	42	46	50	52	54
24 - 26	33	34	37	39	42	46	50	51	53
26 - 28	33	34	36	38	41	45	49	51	53
28 - 30	33	34	36	38	41	45	49	50	52

Cover depths designated "a" are not critical and width does not govern.
Cover depths designated "b" result in loads exceeding safe support strength.

MAXIMUM TRENCH WIDTH (Inches)

Pipe: Extra Strength Vitrified Clay ASTM C 700
Embedment: Class B
Soil: Cohesive (K ' = 0.130) 120 pcf (No Live Load)

	Nominal Pipe Size (inches)								
:pth (feet)	8	10	12	15	18	21	24	27	30
2.5 - 10	a	a	a	a	a	a	a	a	a
10 - 12	a	a	a	a	4	54	60	64	67
12 - 14	a	a	38	42	46	50	55	59	61
14 - 16	a	33	37	39	43	48	53	55	57
16 - 18	a	33	36	38	41	46	50	52	55
18 - 20	31	32	35	37	40	44	48	50	53
20 - 22	30	31	34	36	39	43	47	49	52
22 - 24	30	31	33	35	38	42	45	48	b
24 - 26	29	31	33	34	37	41	44	47	b
26 - 28	29	30	32	34	37	41	44	b	b
3 - 30	29	30	32	34	36	40	43	b	b

Cover depths designated "a" are not critical and width does not govern.

Cover depths designated "b" result in loads exceeding safe support strength.
MAXIMUM TRENCH WIDTH (Inches)

Pipe: Extra Strength Vitrified Clay ASTM C 700
Embedment: Class B
Soil: Cohesive (K ' = 0.130) 120 pcf (H-20 Truck Loading)

	Nominal Pipe Size (inches)								
Cover Depth (feet)	8	10	12	15	18	21	24	27	30
2.5 - 8	a	a	a	a	a	a	a	a	a
8 - 10	a	a	a	a	a	a	a	a	71
10 - 12	a	a	38	42	47	53	59	61	64
12 - 14	a	34	38	42	46	50	54	57	59
14 - 16	a	33	37	39	43	48	53	55	57
16 - 18	32	33	36	38	41	46	50	52	55
18 - 20	31	32	35	37	40	44	48	50	53
20 - 22	30	31	34	36	39	43	47	49	b
22 - 24	30	31	33	35	38	42	45	48	b
24 - 26	29	31	33	34	37	41	44	47	b
26 - 28	29	30	32	34	37	41	44	b	b
28 - 30	29	30	32	34	36	40	43	b	b

Cover depths designated "a" are not critical and width not govern.
Cover depths designated "b" result in loads exceeding safe support strength.

7. Maximum Trench Widths for Reinforced Concrete and Ductile Iron Pipe: When reinforced concrete and ductile iron pipe is utilized, the strength class and the maximum allowable trench width as established by the Engineer will be shown on the Plans.

8. Option to Trenching: Contractor may perform excavation by tunneling methods as set forth herein at no additional cost to the Owner provided prior written approval for each such location is obtained from the Engineer.

2505.10 Tunneling, Boring and Jacking:

1. Scope: This item establishes the requirements to be followed for pipeline excavation performed by tunneling, boring and jacking methods.

2. General: Tunneling includes all underground horizontal excavations necessary to install the pipeline. The Contractor shall submit to the Engineer, prior to actual work, a written description of his proposed tunneling operation. It shall include the types and locations of shafts, methods to provide safe support strength for the pipeline when the shafts or bore pits exceed maximum allowable trench widths and other features that would affect the pipeline.

   Tunneling shall be done with a minimum inconvenience and disturbance to the

general public and abutting property owners.

3. Tunnel Cross Section: The tunnel shall be circular in cross section and of the size specified. Alternate size and shape may be submitted for consideration by the Engineer.

4. Construction:

   a. General: All tunnel excavation shall provide an excavation conforming to the outside diameter of the casing and/or carrier conduit. The excavation shall be to an alignment and grade which will allow the carrier conduit to be installed to proper line and grade as shown on the Plans and as established in Section 2506.2.9 - Installation.

   b. Excavation: Conduct excavation in a manner to prevent disturbing overlying and adjacent material. Perform dewatering and chemical soil stabilization or grouting if necessary, due to existing field conditions.

SECTION 2506 Installation:

2506.1 Scope: This section governs construction methods and procedures for the installation of gravity and pressure pipelines and appurtenances.

`506.2 General: All pipeline installations shall conform to the following requirements:

1. Governmental Requirements: Sanitary sewer line installation shall comply with applicable State and County Health and Environment Departments requirements. See Special Provisions for governing requirements.

2. Trench Dewatering: Contractor shall maintain a dry and stable trench, obtain necessary permits, and provide for the proper method of discharging such water from the work site at all times until pipeline installation is completed to the extent that hydrostatic pressure flotation or other adverse effects will not result in damage to the pipeline.

   Proper dewatering techniques are the Contractor's responsibility. All work performed by the Contractor which is adversely affected by his failure to adequately dewater trenches will be subject to rejection by the Engineer. The Contractor shall repair and/or replace the affected pipeline without additional compensation.

3. Drainage Course Crossing Encasement: Any pipeline crossing a well-defined drainage course having less than three (3) feet of cover over the pipe shall be encased in concrete. The length of encasement shall be as shown on the Plans or if not shown as specified by the Engineer.

4. Trench Shoring and Bracing: All shoring, bracing or blocking shall be

furnished and installed as necessary to preserve and maintain exposed excavation faces, to protect existing improvements, to protect the proposed pipeline and to provide for safety.

Shoring or other methods for support of trench walls is the responsibility of the Contractor and shall be accomplished by methods that will not adversely affect pipeline alignment, grade and/or structural integrity.

All bracing, sheeting and/or shoring installed below a horizontal plane six (6) inches above top of proposed pipe shall not be disturbed or removed after pipe and/or pipe embedment has been installed unless otherwise specified. The bottom skids of a trench shield shall not extend lower than six (6) inches above top of proposed pipe.

5. Pipe Embedments: All pipe embedment shall conform to Class B unless otherwise specified. Installation shall be in strict conformance with instructions for the appropriate Class being utilized.

   All Class A concrete embedments for rigid conduits shall begin and end at a pipe joint.

6. Bedding Installation:

   a. The trench subgrade shall be prepared to provide a uniform and continuous pipe support between pipe bells and joints.

   b. Place and densify embedment material by shovel slicing or vibrating and prepare embedment material so that the pipe will be true to line and grade after installation.

   c. After each pipe has been brought to grade, aligned, and placed in final position, deposit and densify by shovel slicing sufficient bedding material under the pipe haunches and on each side of the pipe to hold the pipe in proper position during subsequent pipe jointing, bedding, and backfilling operations. Place bedding material uniformly and simultaneously on each side of the pipe to prevent lateral displacement.

   d. Place pipe that is to be bedded in Class A (concrete) embedment in proper position on temporary supports consisting of wood blocks or bricks with wood wedges. When necessary, anchor or weight the pipe to prevent flotation when the concrete is placed.

   e. Place concrete for Class A (concrete) embedment or encasement uniformly on each side of the pipe and deposit at approximately its final position. Do not move concrete more than five (5) feet from its point of placement.

   f. If unstable subgrade conditions are encountered and it is determined by the Engineer that the bedding specified will not provide suitable support for the

pipe, additional excavation to the limits determined by the Engineer will be required. This additional excavation shall be backfilled with material approved by the Engineer.

7. Pipe Embedment Designations and Descriptions:

a. Class A. Embedment - Concrete Cradle, Arch or Encasement:

(1) All Class A embedments require A 480-1-4 concrete except as otherwise specified. After initial set of concrete, one (1) foot of backfill material should be placed over the conduit or concrete. The backfill above this point shall not be placed nor sheeting removed until at least forty-eight (48) hours after placement of the concrete. Time requirements may be adjusted by the Engineer to obtain structural integrity.

(2) Class A embedments for all pipe shall be installed with reinforcing steel of not less than $p = 0.4\%$, where p is the ratio of the area of steel to the area of concrete, or as otherwise specified. Reinforcing steel shall be uniformly spaced and have a minimum lap of sixteen (16) bar diameters.

b. Class B Embedment: The pipe shall be bedded in granular material, with a minimum thickness below the pipe as specified in Section 2505.9.5.

(1) First Class: The granular material shall be placed to the horizontal center line of the pipe. The backfill from the horizontal center line to a level not less than twelve (12) inches above the top of pipe shall be carefully placed select earth backfill compacted to eighty-five percent (85%) of maximum density at an optimum moisture + or - 2% as defined in AASHTO T99 or ASTM D 698. The select material shall be free from debris, organic matter, frozen material and rocks larger than one (1) inch. Class IV and Class V embedment materials, as defined in ASTM D 2321, shall not be used for bedding, haunching, or initial backfill of flexible pipe.

(2) First Class Modified: The backfill shall be the same as for First Class except all of the material used to a level not less than six (6) inches above the top of the pipe bell or coupling shall be bedding aggregate.

c. Class C Embedment: The pipe shall be bedded in granular material with a minimum thickness beneath the pipe as specified in Section 2505.9.5.

It shall be sliced under the haunches of the pipe to a height one-sixth (1/6) of the outside diameter of the pipe. Backfill above the bedding to a point twelve (12) inches above the top of pipe, shall be carefully placed select earth backfill compacted to eighty-five percent (85%) of maximum density as defined in AASHTO T99 or ASTM D 698.

8. Tees, Wyes and Building Service Lines: Tees (Ts), wyes (Ys), and building service lines shall be installed as shown on the Plans or specified herein.

   a. Tees, wyes and saddles shall be installed at forty-five (45) degrees with pipe springline for pipe sizes 8 through 16 inch diameter. Tees, wyes and saddles shall not be installed in pipe sizes greater than or equal to eighteen (18) inch diameter.

   b. Building service lines shall be installed with a straight alignment and at a uniform grade not less than two (2) percent unless otherwise specified and shall be embedded with Class B embedment. When a building service line grade exceeds twenty (20) percent, pipeline anchors shall be installed as required under Section 2506.2.11., with the first anchor not more than twelve (12) nor less than seven (7) feet upstream of the tee or wye.

   c. The Contractor shall maintain an accurate record for submittal to the Engineer of location, size and direction of each tee, wye, saddle and/or location, size and length of each building service line. Locations shall use the pipeline stationing as shown on the Plans or the distance from the first downstream manhole. In the event such records are not kept or are lost before final acceptance of the work, the required information shall be redetermined by the Contractor at no additional cost to the Owner.

   d. Service lines shall be terminated and capped one foot on the public side of right-of-way or easement lines.

9. Gravity Sewers: All gravity sewers shall be installed to the alignment, elevation, slope, and with pipe embedment as specified and/or shown on the Plans. Maintain the following tolerances from true alignment and grade between adjacent manholes:

Alignment	6 inches
Grade	+ 1 inch

   Joint deflection shall not exceed the maximum allowable deflection per joint according to ASTM C 425, ASTM C 594 and AWWA C 600. Only one correction for alignment and/or grade shall be made between adjacent manholes.

10. Pressure Sewers (Force Main): All pressure sewers shall be installed with required pipe embedment to depths shown on the Plans (not less than 42 inches) and to a continuous slope when not shown. Approved air relief valves shall be installed at all locations shown on the Plans or where required by the Engineer.

    The Contractor shall block and anchor the pipeline to accommodate thrust and testing forces at pipe deflections, bends, tees, and plugs in accordance with the

Contract Documents. All damage caused by the Contractor's failure to provide adequate thrust supports shall be corrected by the Contractor at no additional cost to the Owner.

11. Anchors: Pipelines shall be anchored in accordance with the table below:

PIPELINE ANCHORS

Percent of Grade	Center to Center Max. Spacing (Feet)
20-35	36
35-50	24
50	16

The anchor shall be of concrete or other material approved by the Engineer. Concrete anchors shall have a minimum thickness of twelve (12) inches. The anchor shall extend not less than one (1) foot into undisturbed earth on the sides and bottom and one (1) foot above top of pipe. In incompressible material, the above dimensions may be six (6) inches each side and bottom. The anchor shall support a joint fitting.

12. Pipe Laying: All pipe shall be installed in accordance with the pipe manufacturer's recommendations, except as modified herein.

a. Pipe laying shall not proceed if the trench width as measured at the top of pipe exceeds the maximum allowable trench width. If this occurs, the Contractor shall submit to the Engineer for approval a better bedding for the pipe or pipe of sufficient strength to provide safe supporting strength.

b. All pipe and fittings shall be stored and handled with care to prevent damage thereto. Do not use hooks to transport or handle pipe or fittings. Do not drop pipe or fittings.

c. Rejected pipe and fittings shall be marked and removed from the Project Site at no cost to the Owner. All pipe and fittings shall be examined for soundness and specification compliance prior to placement in the trench, and rejected pipe or fittings shall not be incorporated into the pipeline. Check the class or pipe strength to be sure proper pipe is installed.

d. Clean joint contact surfaces prior to jointing. Use lubricants, primers, or adhesives as recommended by the pipe or joint manufacturer.

e. Pipe laying normally shall begin at the lowest point.

f. Unless otherwise required, lay all pipe straight between manholes. Excavate bell holes for each pipe joint. When jointed, the pipe shall form a true and smooth pipeline.

Contract Documents. All damage caused by the Contractor's failure to provide adequate thrust supports shall be corrected by the Contractor at no additional cost to the Owner.

11. Anchors: Pipelines shall be anchored in accordance with the table below:

PIPELINE ANCHORS

Percent of Grade	Center to Center Max. Spacing (Feet)
20-35	36
35-50	24
50	16

The anchor shall be of concrete or other material approved by the Engineer. Concrete anchors shall have a minimum thickness of twelve (12) inches. The anchor shall extend not less than one (1) foot into undisturbed earth on the sides and bottom and one (1) foot above top of pipe. In incompressible material, the above dimensions may be six (6) inches each side and bottom. The anchor shall support a joint fitting.

12. Pipe Laying: All pipe shall be installed in accordance with the pipe manufacturer's recommendations, except as modified herein.

a. Pipe laying shall not proceed if the trench width as measured at the top of pipe exceeds the maximum allowable trench width. If this occurs, the Contractor shall submit to the Engineer for approval a better bedding for the pipe or pipe of sufficient strength to provide safe supporting strength.

b. All pipe and fittings shall be stored and handled with care to prevent damage thereto. Do not use hooks to transport or handle pipe or fittings. Do not drop pipe or fittings.

c. Rejected pipe and fittings shall be marked and removed from the Project Site at no cost to the Owner. All pipe and fittings shall be examined for soundness and specification compliance prior to placement in the trench, and rejected pipe or fittings shall not be incorporated into the pipeline. Check the class or pipe strength to be sure proper pipe is installed.

d. Clean joint contact surfaces prior to jointing. Use lubricants, primers, or adhesives as recommended by the pipe or joint manufacturer.

e. Pipe laying normally shall begin at the lowest point.

f. Unless otherwise required, lay all pipe straight between manholes. Excavate bell holes for each pipe joint. When jointed, the pipe shall form a true and smooth pipeline.

loadings (live, earth and superimposed) which would otherwise be supported by the casing conduit, and to withstand all pressures necessary to install the required grout. All exterior voids around the casing conduits shall be filled with casing conduit grout (2503.6). Interior void between the carrier and casing conduits shall be filled with sand conforming to Section 2510.3.6. Sand shall be applied under pressure to fill all of the voids without adversely affecting the carrier conduit, joints, alignment and grade.

(2) Method B: The steel casing conduit is considered a permanent installation to protect the carrier conduit and to support all loads, therefore, cathodic and corrosion protection and watertight removable end seals are required for the casing conduit. Care shall be exercised to prevent the carrier conduit from floating and receiving any load transfer from the casing conduit unless it is designed for such loading. The void between casing and carrier conduits shall be treated as shown on the drawings. Cathodic and corrosion protection for method B shall be provided by two magnesium anodes, one at each end of the casing pipe, with a lead wire connected to the encasement pipe by thermite welding.

b. Reinforced Concrete Casing Pipe: Reinforced concrete casing pipe is a rigid conduit and shall be installed in accordance with recommended procedures in the latest printing of the Concrete Pipe Design Manual prepared by American Concrete Pipe Association.

2. Casing Installation: Installation of casing shall be supervised by a foreman experienced in such work. Casing shall be installed by a combination of augering and jacking. Alignment and gradient shall be such that the carrier conduit can be installed to line and grade shown on the drawings.

Welding shall be performed by a person experienced with the type of welding necessary. All welds shall conform to AWWA C 206.

3. Liner Plate Installation: Liner plates shall be assembled immediately following the excavation. Advance liner plates or casing continuously with excavation. All voids between liner and surrounding earth shall be filled with casing conduit grout forced in under pressure. As the pumping through any hole is completed, it shall be plugged to prevent the back-flow of grout. After lining installation is complete, it shall be cleaned of all debris and all leaks sealed.

4. Carrier Conduit Installation: After completion of the installation of the casing, the carrier conduit shall be carefully pushed or pulled through the casing in a manner that will maintain proper jointing of the pipe joints and provide required gradient and alignment. Pipe skids shall be provided as indicated on the Plans. The skids shall be securely strapped to the pipe with steel strapping material at least three-quarters (3/4) inch wide.

5. Sand Fill: The annular space between lining and sewer pipe shall be filled with sand from end seal to end seal unless otherwise specified. The fill shall be placed inside the casing in a manner that will not disturb the alignment and/or grade of the sewer pipe. Sand used in casing conduits shall be as specified in Section 2510.3.6. Sand shall be blown into the casing so that all space is filled.

6. End Seals: Construct end seals after sewer pipe has been installed and approved. Brick shall be in accordance with ASTM C 32, Grade SS or SM and mortar in accordance with ASTM C 270.

7. Initial Testing: Air pressure and/or exfiltration test as required shall be successfully performed on the carrier conduit prior to filling the void between casing and carrier conduits with sand or the sealing of the ends of the casing conduit.

8. Carrier Conduit Installed Without Casing: Carrier conduits installed without casing shall be assembled at the entrance to the auger hole and carefully pushed or jacked through the opening using a method designed to prevent disturbing the assembled joints. Auger holes shall be sized to accommodate the carrier conduit with a minimum of annular space around the conduit. When finally in place, carrier conduit shall be true to the line and grade required on the Plans.

SECTION 2507 Backfill:

2507.1 Scope: This section governs the furnishing of all labor, equipment, tools and materials to properly backfill trenches and structures.

2507.2 General:

1. All trash and debris shall be removed from the pipeline excavation prior to backfilling.

2. Unless otherwise specified, all sewer trenches and excavation around structures shall be backfilled to the original surface of the ground with suitable earth or earth and rock. When an earth and rock mixture is used, it shall be placed and thoroughly consolidated with sufficient earth to completely fill all voids between the rocks.

3. The backfill material shall be placed in lifts not to exceed 2 feet in depth. Each lift shall be compacted to the required density prior to the next lift being placed.

4. Commercial sand backfill shall not be used.

5. In areas marked "garden" or "flower garden," the original topsoil shall be replaced to original elevation and depth. (Minimum depth shall be twelve (12) inches).

6. Backfill material shall be carefully placed to avoid damage to or displacement of the pipe and other exposed utilities or structures.

7. Backfill shall not be placed when material contains frost, is frozen, or a blanket of snow prevents proper compaction. Contractor shall remove waste material, trees, organic material, rubbish, or other deleterious substances.

8. No rock whose greatest dimension exceeds six inches shall be placed within two (2) feet of the top of the pipe in any excavation as backfill. No rock greater than one foot in its largest axis shall be placed in any trench excavation as backfill.

2507.3 Backfilling In Street or Alley Right-of-way and Under Pavement:

1. Under areas to be paved, the backfill materials from the top of the pipe embedment (as defined in Section 2506.2.7.b.) to a point 6 inches below top of subgrade shall be compacted in such a manner so as to obtain 90% of maximum density at optimum moisture plus or minus 2% as determined by ASTM D 698. The top 6 inches of subgrade shall be compacted to 95% of maximum density at optimum moisture plus or minus 2%. Outside of areas to be paved the backfill material shall be compacted so as to obtain 90% of maximum density at optimum moisture plus or minus 2% as determined by ASTM D 698. Required compaction and percentage of maximum density must be obtained before pavement is placed.

2507.4 Backfilling In Areas Other Than Street or Alley Right-of-way:

1. From the top of the pipe embedment (as defined in Section 2506.2.7.b.) to a point at grade the backfill material shall be compacted to no less than 90% of maximum density at optimum moisture plus or minus 2% as determined by ASTM 698.

507.5 Backfill Around Structures:

1. No backfill shall be placed over or around any structure until the concrete or mortar has attained a minimum strength of 2000 psi and can sufficiently support the loads imposed by the backfill without damage.

2. The Contractor shall use utmost care to avoid any wedging action between the side of the excavation and the structure that would cause any movement of the structure. Any damage caused by premature or unbalanced backfill or by the use of equipment on or near a structure will be the responsibility of the Contractor.

3. No rock larger than four (4) inches maximum dimension shall be placed within one (1) foot of the exterior surface of any structure.

SECTION 2508 Restoration:

2508.1 Scope: This section covers all work required in surface restoration on private and public properties that are disturbed by construction.

2508.2 General: The Contractor shall restore the project site to conditions equal to or better than those existing prior to entry unless otherwise specified.

1. Maintain adequate safety signs, barricades and lights until final restoration of work area is completed.

2. Public property shall be restored to the requirements of the public body having jurisdiction.

2508.3 Clean-Up: The Contractor, upon completion of installation and backfill operations, shall prepare the area for final grading including but not limited to the following items:

1. Clean-up shall follow the backfilling operations as closely as possible.

2. Excess material shall be removed from the site including material that has washed into the stream beds, storm water facilities, streets, etc.

3. Tools, equipment and construction material shall be removed except for in designated storage areas along the pipeline route.

4. Restore surface and sub-surface drainage and provide temporary wash checks where necessary.

2508.4 Finished Grading: The Contractor shall finish grade the area to lines and grades shown on the Plans or if not shown to those that existed prior to the area being disturbed. Special attention shall be directed to assure surface drainage. The area shall be smoothed by raking or dragging.

2508.5 Seeding: The requirements set forth under Section 2401 - Seeding shall be used as if fully written herein.

2508.6 Sodding: The requirements set forth under Section 2402 - Sodding shall be used as if fully written herein.

2508.7 Pavement Replacement:

1. Scope: This section covers the furnishing of all labor, equipment, tools and materials in the performance of all work for the replacement of pavement including sidewalks, driveways and curbing as shown on the Plans and in the Special Provisions.

2. Definition: Pavement replacement as used herein shall mean reconstruction of the entire structural section of all pavements removed in excavated areas, including sidewalks, driveways and curbing and all damaged pavement surfaces outside of excavation limits.

3. General:

   a. Replacement of pavement shall proceed in accordance with the traffic control plans and/or approved construction schedule.

   b. Prior to pavement replacement, all edges that were previously cut but have been subsequently damaged shall be recut and all adjacent undermined and heaved pavement shall be removed.

   c. Removed pavement shall be replaced in conformance with the requirements of applicable portions of Section 2200 - Paving, or Section 2300 - Incidental Construction.

4. Non-Standard Pavement: Pavement sections not conforming to Section 2200 of these Specifications shall be replaced in accordance with requirements of the jurisdictional agency.

2508.8 Fences: All fencing damaged and/or removed existing prior to construction shall be restored to a condition not less than that which existed prior to construction.

2508.9 Walls: Retaining and architectural walls, if disturbed or damaged, shall be restored architecturally and structurally to conditions not less than that which existed prior to construction.

2508.10 Trees, Shrubs and Bushes: Any tree, shrub or bush replaced shall be planted outside the permanent sanitary sewer right-of-way and shall be of the same species as the removed tree, shrub or bush. Any tree, shrub or bush specie that is prohibited by local restrictions shall be substituted with a related species. Replacement planting shall conform to the guidelines ANSI-Z60.1-1980 "American Standard for Nursery Stock" specified by the American Association of Nurserymen. The contractor shall notify the property owners at least two weeks prior to the start of construction so property owners can remove small plants and flowers.

THESE PAGES ADDRESSING TESTING
INTENTIALLY OMITTED

Manholes and special structures may be constructed of precast concrete sections, cast-in-place concrete, or brick masonry.

2510.3 Manhole Materials:

1. Brick shall conform to ASTM C 32, Grade SS or SM, nominal size 2 1/4 x 4 x 8 inches. For grade SM, the maximum water absorption by five (5) hour boiling shall not exceed twelve (12) percent per individual brick or nine (9) percent for the average of five (5) bricks.

2. Mortar and plaster coating: Mortar and plaster coatings for masonry manhole units shall conform to ASTM C 270. The mix shall consist of two (2) parts portland cement to one (1) part masonry cement to six (6) parts standard plaster sand. No mortar or plaster mixed more than thirty (30) minutes shall be incorporated in the work.

3. Non-Shrink Grout: Non-shrink grout shall be in the plastic state and show no expansion after set as tested in accordance with ASTM C 827 and shall develop compressive strength not less than three thousand (3,000) pounds per square inch with a trowelable mix within twenty-four (24) hours per ASTM C 109. The placement time shall be not less than forty-five (45) minutes based on initial set per ASTM C 191.

4. Waterproofing: Waterproofing shall be a coal-tar coating and conform to ASTM D 450. Exterior surfaces shall be coated with Tnemec "46-450 Heavy Tnemecol" or approved equal. Where specified, interior surfaces (which are exposed to raw sewage and sulfide gases) shall be coated with Tnemec "46-449 Heavy Duty Black" or approved equal. The minimum dry thickness for all waterproofing shall be 14.0 mils.

5. Precast Concrete: Precast concrete manholes shall conform to ASTM C 478 with the following modifications.

   a. Wall thickness not less than one-twelfth (1/12) of inside diameter or four (4) inches, whichever is greater, shall be used when the manhole depth is less than sixteen (16) feet; one-twelfth (1/12) of inside diameter plus one (1) inch or five (5) inches, whichever is greater, shall be used when manhole depth is sixteen (16) feet or greater.

   b. Cement, Fine Aggregate, Coarse Aggregate and Water used in the manufacture of precast manholes shall be as specified in Section 2510.3.6.

   c. Developed bases shall be used where practical. The diameter of the base pad shall be eight (8) inches greater than outside diameter of the manhole.

d. Pipe openings shall be circular or horseshoe shaped with surfaces grooved or textured to improve mortar bond. Flexible gaskets shall be used with developed base manholes. Flexible gaskets shall be Press-wedge, A-Lock, or approved equal.

e. The minimum distance from the invert of the downstream pipe to the top surface of the base shall be three (3) inches.

f. Joints between manhole sections, adjustment rings, and below the ring and cover shall be sealed with preformed bitumastic sealants, Kent-Seal, Ram-Nek, E-Z Stick or approved equal. The minimum bead dimension shall be one inch.

6. Manhole and Special Concrete: Manhole and special concrete shall conform to "The Mid-West Concrete Industry Board Incorporated" (MCIB) Specifications and to the requirements therein for the MCIB Mix Number specified on the drawings or as provided herein.

a. Standard Concrete: Standard concrete used for concrete encasements and embedments, thrust blocks, pipe anchors, pipe collars, etc. shall be MCIB Mix Number A 480-1-4 (3000 psi 28-day strength), unless otherwise specified.

b. Structural Concrete: Structural concrete used for aerial crossing piers, wetwell walls, manhole walls, bases, inverts, and flat slabs, etc. shall be MCIB Mix Number A 558-1-2, (4000 psi 28-day strength), unless otherwise specified.

c. Admixtures: Air-entraining admixtures shall provide an air content within the range of 4 1/2 to 7 1/2 percent by volume as measured by the pressure method (ASTM C 231). The air entraining admixtures shall meet the requirements of ASTM C 260.

d. Portland Cement: Portland cement shall conform to ASTM C 150 Type I. Where high early strength is desired, Type III can be used.

e. Fine Aggregate: Fine aggregate shall be clean, natural sand meeting the requirements of ASTM C 33. Grading shall be within the limits as set forth by MCIB.

f. Coarse Aggregate: Coarse aggregate shall be limestone meeting the requirements of ASTM C 33. The sum total of all deleterious material shall not exceed the requirements of ASTM C 33.

g. Water: Water shall be clean and free from deleterious substances. Only potable water will be acceptable without testing.

7. Reinforcement steel: Reinforcement steel shall conform with the following

minimum requirements.

a. Design: Reinforcing steel shall conform to one of the following.

(1) Welded Wire Fabric - ASTM A 185.

(2) Reinforcing Bars - ASTM A 615, Grade 40, or Grade 60.

(3) Fabricated Steel Bar and Rod Mats - ASTM A 184, Grade 40, or Grade 60.

b. Fabricating Tolerances: Tolerances for concrete reinforcement shall conform to the following requirements.

(1) Sheared length = +/- 1 inch.

(2) Stirrups, ties, and spiral = +/- 2 inches.

(3) All other bends = +/- 1 inch.

l. Iron Castings: Casting shall conform to the requirements of ASTM A 48, Class 30. Castings shall be clean and without surface defects that will impair serviceability. Plugging or filling of holes or other defects will not be permitted. Parting fins and pouring gates shall be removed.

a. Rings and Covers: Rings and covers shall meet the following minimum requirements.

(1) Bearing surfaces between the ring and cover shall be machine finished or ground to assure interchangeability and a nonrocking fit in any position.

(2) Provision shall be made for opening, such as concealed pick hole(s).

(3) Bolt-down type manhole rings shall be anchored to the manhole walls with not less than four (4) three-fourths (3/4) inch diameter steel bolts embedded a minimum of fourteen (14) inches, except where the entire ring is embedded in a concrete top slab.

(4) Rings and bolt-down covers shall be provided with machined surfaces, O-ring gaskets and five-eighths (5/8) inch hex head brass cover bolts. Cover bolt heads shall fit flush or below the top of the cover. The O-ring rubber gasket shall be neoprene or other synthetic, sixty (60) plus or minus five (5) hardness when measured by ASTM D 2240 type durometer.

b. Steps:

(1) Cast-Iron Steps: Cast iron steps shall meet the following minimum requirements.

(a) Minimum cross-sectional dimensions of one (1) inch horizontally and one and one-eighth (1 1/8) inches vertically.

(b) A skid resistant pattern in the step tread area consisting of multiple grooves one-eighth (1/8) inch deep and one-eighth (1/8) inch wide.

(c) Upward protruding lugs on corners of step a minimum of three-fourths (3/4) inch high.

(d) Provisions for secure anchorage in the manhole wall.

(2) Steel core, plastic coated steps: Steel core plastic coated steps shall meet the following minimum requirements.

(a) The plastic coating shall be a copolymer polypropylene meeting ASTM D 2146.

(b) The steel core shall be a minimum of 1/2 inch in diameter and grade 60.

(c) The requirements of ASTM C 478 shall be met except minimum pull-out strength shall be 1,000 pounds.

2510.4 Manhole Site Preparation: Manhole site preparation shall be governed by Section 2504.

2510.5 Manhole Excavation:

1. Excavation: Excavation for manholes and special structures shall be governed by this Section and Section 2505. It shall be achieved in a suitable and orderly manner providing a minimum disturbance to the general public.

2. Depth of Excavation: Depth of excavation shall be to that required for proper installation of the manhole or structure. Over-depth excavation may be required by the Engineer if the subgrade is unstable. Over-depth excavation due to unstable subgrade shall be backfilled as required by the Engineer. Over-depth excavation occurring through an oversight by the Contractor shall be backfilled as required by the Engineer at no additional cost to the Owner.

3. Side Clearances: Side clearances outside the manhole and/or structures shall be no greater than to allow for forming, connection of piping, proper application of special coatings, if required, and to permit inspection. When concrete is to be placed directly against excavated faces, excavation shall be sufficiently outside of the manhole or structure to provide not less than three (3) inches of concrete

cover over the steel reinforcement

2510.6 Manhole Installation: Manhole installation shall be governed by this Section and Section 2506. It shall be performed by the Contractor on a schedule that will provide an orderly progression of the work.

1. Bases:

   a. Precast developed bases shall be reinforced in accordance with ASTM C478.

   b. If preferred developed bases are not used, poured concrete bases shall be used. Developed bases shall be installed on a maximum of 4 inches of crushed rock. Depths exceeding this amount shall be filled with mass concrete.

   c. Poured-in-place bases shall have a minimum thickness of eight (8) inches. When poured-in-place bases are used, the invert shall be poured monolithically with the base. The bottom wall sections shall be embedded in the base section a minimum of three (3) inches. The bottom precast wall section shall not be set upon a previously poured base. Solid concrete blocks shall be used for supporting and leveling the wall section prior to pouring the base.

2. Inside Dimensions: The minimum horizontal clear distance in the barrel of the manholes shall not be less than four feet unless otherwise specified on the Plans.

3. Brick:

   a. Wall Thickness: Wall thickness shall conform to the following table.

Depth (Feet)		Wall Thickness (Inches)
0 - 12		8
12 - 22		12
22 - 30	(Maximum)	16

   b. Construction: Brick shall be laid radially in a full bed of mortar with the best smooth end exposed on the inside of manhole. Inside vertical face joint shall be not more than one-fourth (1/4) inch wide; horizontal joints, not more than one-half (1/2) inch wide. All voids between bricks, and holes in cored brick, shall be filled with mortar. A full one-half (1/2) inch mortar coating shall be applied to outside face of manhole; mortar coating to be placed progressively as the manhole is constructed and be steel troweled to produce a dense, smooth finish. Exposed mortar joints shall be pointed up with mortar and struck flush. Dry bricks shall be moistened to prevent absorption of mortar moisture and shall be heated when containing

frost to provide bonding with mortar. Mortar having reached its initial set or which has been mixed more than thirty (30) minutes shall be not incorporated within the work.

c. Waterproofing: Apply coal-tar coating after the mortar coating has set forty-eight (48) hours. Minimum dry thickness of the coal-tar coating shall be 14.0 mils. Do not backfill until the coal-tar has set. Repair all damaged tar coating prior to final backfill.

4. Precast:

a. Delivery: Precast concrete components shall not be delivered to the job until representative concrete control cylinders have attained at least 80 per cent of the specified minimum design strength.

b. Inspection: Precast concrete shall be inspected when delivered. Rejection of defective or cracked precast concrete components shall be in accordance with ASTM C478.

c. Wall Thickness: Wall thickness shall conform to the requirements of Section 2510.3.5.

d. Construction: Precast sections shall be cleaned of all dirt, grass, and other deleterious matter. Seal each joint (including adjustment rings and castings) with a double bead of preformed bitumastic joint sealant. Sections shall be placed such that steps are aligned but without rotation or damage to sealant integrity. Lift holes shall be patched with non-shrink grout.

5. Cast-In-Place:

a. Wall Thickness: Wall thickness shall conform to the dimensions as shown on the drawings.

b. Construction: Reinforcement steel shall be placed as shown on the drawing. Tie-holes shall be patched with non-shrink grout. Wall sleeves, where required, shall be installed as shown on the drawings. Water stops shall be installed at the wall and slab connection and shall be of the size, thickness and material as shown on the drawings.

c. Waterproofing: Interior protective coatings, where required, shall conform to the material specifications. Application shall conform to the manufacturer's recommendation.

6. Top Slabs: Thickness shall conform to the dimensions and reinforcement steel shall be placed as shown on the drawings.

7. Pipe Stubs: Stubs shall be installed at the locations, angles, elevations and of

the materials as shown on the drawings. A water-tight removable stopper shall be installed in each pipe stub. Pipe stubs shall be installed so that a pipe joint will be two (2) feet or less from the outside manhole wall.

8. Inverts: Inverts shall be structural concrete and steel-troweled to produce a dense, smooth finish. The invert channel shall be "U" shaped in cross section and extend upward one-half of the inside pipe diameter. Smooth transitions shall be formed for pipes of different sizes, elevation and bends. The invert bench shall be sloped to drain.

9. Steps: Steps shall be aligned vertically below the casting and spaced at sixteen (16) inch centers. The top step shall be not more than one (1) foot below the top of the cone. The lowest step shall be not more than two (2) feet above the invert bench. Field-drilled step holes are not permitted in precast concrete manholes.

10. Top Elevation: The finished top elevation of manhole castings shall conform to the following unless otherwise shown on the plans or directed by the Engineer.

    a. In paved or future paved areas, the top of the casting shall conform to the slope of the pavement and be 1/8 inch below the finished pavement elevation.

    b. In non-pavement areas, the top of the casting shall be not more than six (6) inches above the surrounding ground nor less than the sod's upper root limit. The final elevation shall be at a point where water will not pond over the manhole cover.

11. Manhole Adjustment: All new manholes will be provided with adjustment ring(s) underneath the casting as shown on Plans. The joints shall be sealed with preformed bitumastic sealant. The maximum allowable adjustment distance between the top of the cone and the bottom of the casting shall be 12". If the top of an existing manhole is required to be raised to an elevation that will exceed the maximum adjustment distance or lowered more than the adjustment rings will allow, all vertical adjustments shall be made to the barrel of the manhole.

12. Castings: Castings shall be installed with the mud ring inserted inside the manhole opening and resting on a minimum of two rows of preformed bitumastic sealer. Bolt-down castings shall be held in place as shown on the Plans.

2510.7 Manhole Backfilling: Manhole backfilling shall be governed by Section 2507.

2510.8 Restoration: Restoration shall be governed by Section 2508.

2510.9 Manhole Testing:

1. Scope: This section governs the required testing of manholes and structures not otherwise set forth.

2. General: Twenty (20) percent of all manholes, yet not less than two, as selected by the Engineer shall be tested for infiltration and inflow. If more than twenty (20) percent of the sample fail the test then an additional twenty (20) percent shall be tested. If four (4) or less manholes are tested, all must pass the test requirements. The testing process shall be repeated until the eighty (80) percent success rate is satisfied.

3. Infiltration and Inflow Testing: Manholes shall be dye water tested in the presence of the Engineer. The dye water test shall consist of injecting a concentrated dye and water solution approximately 12" below the ground surface and outside of the manhole frame. Dyed water shall be injected around the frame until the ground is saturated, as evidenced by surface ponding. Each manhole will be observed for a minimum period of five minutes after dye water injection. Manholes observed to be actively leaking, greater than 0.02 gpm (approximately 10 drips per minute) from a single source will not be accepted. Manholes failing the test will be repaired and retested.

g. Pavement and Curbing: Measurement will be made in accordance with Section 2210.

h. Driveways and Sidewalks: Measurement will be made in accordance with Section 2310.

2511.2 Payment: Payment will be made at the respective unit or lump-sum price listed in the proposal and shall be full compensation for all labor, materials, and equipment necessary to complete the respective unit in place. There will be no separate measurement or payment for any item of work not specifically identified and listed in the proposal, and all such work shall be considered a subsidiary item with all costs pertaining thereto included in the prices for other items listed in the proposal. At the Engineer's option, partial payment may be made for any lump sum item listed in the proposal, providing that the Contractor is diligently and satisfactorily pursuing full completion of such partially complete item in accordance with the approved job progress schedule.

December 1992

2500-SUP.doc

CITY OF KANSAS **CITY, MISSOURI**

SUPPLEMENT TO

APWA STANDARD SPECIFICATIONS AND DESIGN CRITERIA
SECTION 2500 SANITARY SEWERS

This is Kansas City, Missouri supplement to Section 2500, Sanitary Sewers (December 16, 1992) APWA Standard Specification and Design Criteria. The following additions, deletions and/or revisions are adopted for use and shall become a part of Section 2500 for use within Kansas City, Missouri.

Copies of this Supplement may be obtained from the pennit counter on the 18th floor of City Hall.

Section headings and changes from APWA are **highlighted** for clarity. Changes made in this supplement are marked by an asterisk, "u".

2503 MATERIALS

2503.2 Subsection 2503.2.6 shall be revised t&read as follows:

2503.2.6 Type PSM polyvinyl chloride (PVC) Sewer Pipe and Fittings: 6 through 15 inch diameter pipe and fittings shall conform to ASTM D 3034 and pipe having diameter 18 through 27 inch shall conform to ASTM F 679 except as otherwise specified herein.

a. General: Furnish maximum pipe lengths normally produced by the manufacturer except for fittings, closures and specials.

b. Materials: The pipe shall be made of PVC plastic having a cell classification of 12454 B or 12454 C or 13364 B as defined in ASTM D 1784.

c. Design: Pipe shall have an integral bell and spigot joint. Wall thickness shall be SDR *35*, **or SDR 26 for ASTM D 3034 pipe. Wall thickness shall be SDR 21 for ASTM D 2241 pipe. Wall thickness shall be T-1 for ASTM F 679 pipe. If for** any reason the depth of cover on SDR 35 pipe becomes greater than 15 feet, the contractor shall immediately notify' the design engineer.

d. Joints: Joint tightness shall conform to ASTM D 3212. Joints shall be push-on type only with the bell-end grooved to receive a gasket~ Elastomeric seal (gasket) shall have a basic polymer of synthetic

rubber conforming to ASTM F 477. Natural rubber gaskets will not be accepted.

e. Fittings: Fittings defined as tee (T) or wye (Y) connections suitable for assembly to four (4) inch or six (6) inch building service lines shall be bell-end with a minimum wall thickness conforming to SDR 35 and shall be furnished by the pipe manufacturer. A special design is required for service connections 8 inches and larger. Saddle tees or wyes will not be permitted during sewer main installation.

2503.3 Subsection 2503.3.2 shall be revised to read as follows:

2503 .3 .2 Bedding Aggregate: All material used for crushed stone pipe bedding shall **be three-eighth (3/8") inch clean limestone aggregate meeting the following gradation:**

SIEVE SIZE GRADATION	**PERCENT PASSING**
3/8"	**100**
#4	***30-45***
#10	**0-4**

2506 INSTALLATION:

2506.2 Subsection 2506.2.5 shall be revised to read as follows.

2506.2.5 Pipe Embedments: All pipe embedment shall conform to Class B, **First Class Modified,** unless otherwise specified. Installation shall be in strict conformance with instructions for the appropriate Class being utilized.

All Class A concrete embedments for rigid conduits shall begin and end at a pipe joint.

2509 TESTING

2509.5 Subsections 2509.5.l.c and d shall be revised to read as follows.

*2509.5.lc The mandrel shall be hand pulled **without any mechanical assistance,** by **one of** the Contractor's **personnel** through all flexible sewer lines. Any sections of sewer not passing the mandrel test shall be uncovered and the Contractor, at no additional cost to the Owner, shall **re-bed** or replace the sewer to the satisfaction of the Engineer. These repaired sections shall be re-tested.

2509.5.1 .d The testing shall be conducted after final trench backfill.

D and L Dimensions For
9 Arm Mandrel

Nominal ASTM 3034 ASTM 3034 ASTM 2241 ASTM 679
Diameter L (Mm) SDR 35 SDR 26 SDR 21 T-1 Wall

Nominal Diameter	L (Min)	ASTM 3034 SDR 35	ASTM 3034 SDR 26	ASTM 2241 SDR 21	ASTM 679 T-1 Wall
8"	8"	7.52"	7.37"	7.41"	—
10"	10"	9.40"	9.21"	9.24"	—
12"	12"	11.19"	10.96"	10.96"	—
15"	15"	13.70"	13.42"	—	—
18"	18"	—	—	15.47"	16.76"
21"	21"	—	—	—	19.74"
24"	24"	—	—	20.63"	22.21"
27"	27"	—	—	—	25.03"

The above dimensions were determined using the following formula:
.95 x (Average O.D. -2 x mm. wall thickness)

2510

2510.3

MANHOLES AND SPECIAL STRUCTURES:

Subsection *2510.3.5.a* shall be revised to read as follows:

* 2510.3.5.a **2510.3**

Wall thickness not less than one-twelfth (1/12) of inside diameter **plus one (1) inch or five (5)** inches, whichever is greater.

The following Subsections *2510.3.5.g.*. h. **and** i. shall be added:

2510.3.5.g **Both the bell and spigot ends of the manhole sections shall be primed with a liquid primer that is compatible with the bitumastic sealants, Kent-Seal, Ram-Nek, E-Z Stick or approved equal.**

* **2510.3.5.h**

* 25103 5.i

2510.3
Reducing sections may be used at six (6) feet or more above the invert.

Eccentric cone sections shall be used unless noted otherwise on the project plans.

Subsection 25 10.3.8 shall be revised **to** read as follows:

*25 10.3.8 Iron Castings: Casting shall conform to the requirements of ASTM A 48, Class 35 **B, ASUTO M396 and KCMO Standard MH-RC.** Castings shall be clean and without surface defects which will impair serviceability. Plugging or filling of holes or other defects will not be permitted. Parting fins and pouring gates shall be removed.

a. Rings and Covers: Rings and covers shall meet the following minimum requirements and **Kansas City Standard MH-RC.**

(1) Bearing surfaces between the ring and cover shall be machine finished or ground to assure interchangeability and non-rocking fit in any position.

(2) Provision shall be made for opening, such as concealed pick holes (s).

(3) Bolt-down type manhole rings shall be anchored to the manhole walls with not less than four (4) three-fourths (3/4) inch **(M18x2.5)** diameter steel bolts embedded a minimum of **four (4)**
inches, (100 mm), plus or minus one-half (1/2) inch, (10 mm), into the cone section of the manhole, except where the entire ring is embedded in a concrete top slab.

*(4) Rings and bolt-down covers shall be provided with machined surfaces, 0-ring **or** T-ring gaskets **and cam locks. Camlock** bolt heads shall fit flush or below the top of the cover. The 0-ring **or T-ring** rubber gasket shall be neoprene or other synthetic **material,** sixty (60) plus or minus five *(5)* hardness when measured by ASTM D 2240 type durometer.

b. Steps:

(1) Cast-Iron Steps: Cast iron steps are not allowed.
(2) Steel core, plastic coated steps (Note: the wording remains unchanged)

2510.6 Subsection 2510.6.1.c shall be revised and Subsection 25l0.6.1.d added as follows:

*2510.6.1 c. Poured-in-place bases shall have a minimum thickness of eight (8) inches. When poured-in-place bases are used, the invert shall be poured monolithically with the base. The bottom wall sections shall be embedded in the base section a minimum of three (3) inches. The bottom precast wall section shall not be set upon a previously poured base. Solid concrete blocks shall be used for supporting and leveling the wall section prior to pouring the base.

Base thickness may be reduced to six (6) inches when it is poured on solid rock which meets the approval of the Engineer.

d. Poured-in-place bases shall extend to the first joint from the manhole when reinforced concrete and vitrified clay pipe is used without flexible joints as specified in Sections 2503.2.7.c and 2503.2.8.b

* 2510.6.3.c

terproofing: Apply coal-tar coating after the mortar coating has set forty-eight (48) hours. Minimum dry thickness of the coal-tar coating shall be 14.0 mils. Do not backfill until the coal-tar has set. Repair all damaged tar coating prior to final backfill. The joint between the manhole and the casting shall be wrapped in accordance with 2510.6.4.f.

25 10.6.4

Subsection *2510.6.4.d* shall be revised to read as follows, and subsections 2510.6.4.e and 2510.6.4.f shall be added.

* 2510.6.4.d

nstruction: Precast sections shall be cleaned of all dirt, grass, and other deleterious matter. Seal each joint of adjustment rings and castings with a double bead of pre-formed bitumastic joint sealant. Seal each joint of manhole riser sections with a single bead of preformed bitumastie joint sealant. Sections shall be placed such that steps are aligned but without rotation or damage to sealant integrity. Lift holes shall be patched and the area between the pipe and precast section packed with non-shrink grout.

* 2510.6.4.e

Waterproofing: A coal-tar coating shall be applied to the exterior of all precast manhole sections, flat top sections, and adjustment rings. Application of the coal-tar coating shall be made after inspection and approval of the manhole sections and adjustment rings by the Public Works Engineering division materials and testing laboratory. The minimum dry thickness of the coal-tar coating shall be 14.0 mils. Backfill shall not be made until the coating shall be made prior to backfill.

*2510 64 f

Adjustment Ring Wrap: All adjustment rings shall be covered with an adhesive wrap of elastomeric and/or rubber materials (minimum thickness 0.065 inch), as approved by the Engineer. The wrap shall overlap the joint between the bottom of the casting and the upper adjustment ring and be continuous to the joint between the lower ring and manhole. The minimum overlap of a joint shall be 1 inch. The surface of the adjustment rings and the joints shall be primed with material compatible with the manufacturers recommendations.

02518 DETECTABLE CONCRETE PAVER BLOCKS

A. GENERAL: This section includes concrete paver for detectable concrete paver block construction.

1. References: The publications listed below form a part of this specification to the extent referenced. The publications are referred to in the text by basic designation only.

AMERICAN ASSOCIATION OF TESTING AND MATERIALS (ASTM)

ASTM C 33-01	Standard Specification for Concrete Aggregate
ASTM C 140-	Sampling and Testing Concrete Masonry Units
ASTM C 144-	Standard Specification for Aggregate for Masonry Mortar
ASTM C 936-	Specification for Solid Interlocking Concrete Paving Units
ASTM C 979-	Specification for Pigments for Integrally Colored Concrete

2. Submittals: The following shall be submitted.

a. Product Data

1. Manufacturer's instructions, product data and test reports, SD01-GA-EC, SD09-GA-EC.

b. Samples

1. Full size sample of concrete paving units to indicate color and shape selections, SD14-GA-RE. Color will be KCTC Red.

c. Submit test reports from an independent laboratory for compliance of paving unit requirements to ASTM C 936, SD09-GA-RE.

3. Delivery, Storage, and Handling:

a. Deliver concrete pavers to the site in steel banded, plastic banded, or plastic wrapped cubes capable of transfer by forklift or clamp lift. Unload pavers at job site in such a manner that no damage occurs to the product.

B. MATERIALS:

1. The concrete pavers shall be fabricated to the dimension shown in the drawings.

2. Pavers shall meet the following requirements set forth in ASTM C 936:

a. Average compressive strength of 8,000 psi with no individual unit under 7,200 psi.

b. Average absorption of 5% with no greater than 7% when tested in accordance with ASTM C 140.

c. Resistance to 50 freeze-thaw cycles when tested in accordance with ASTM C67.

3. Pigment in concrete pavers shall conform to ASTM C 979.

4. Material shall be manufactured in individual layer in production pallets.

5. Materials shall be manufactured to produce a solid homogeneous matrix in the production unit.

6. Sampling and Testing:

a. Manufacturer shall provide access to lots ready for delivery to the project or authorized representative for testing in accordance with ASTM 936-82 for sampling of material prior to beginning of paver placement.

b. Manufacturer shall provide a minimum of three (3) years testing backup data showing manufactured products that meet and exceed ASTM 936-82 when tested in compliance with ASTM C-140.

c. Sampling shall be random with a minimum of three (3) specimens per 5000 sq ft shape and size.

d. Test units in accordance with ASTM for compressive strength, absorption and dimensional tolerance. A minimum of three (3) specimens per test required for an average value.

C. INSTALLATION:

1. Place the grout evenly over the subgrade material to the thickness shown on the drawings. The grout should not be disturbed before placement of the paver blocks. Place sufficient grout to stay ahead of the laid pavers.

2. Place the pavers in the pattern as shown on the drawings. Maintain parallel edge lines with the curvature of the walls.

3. Joints between pavers on the average shall be 1/16 inch to 3/16 inch wide.

4. The gaps at the end of the paved area shall be filled with cut pavers or end units. The cut pavers shall be cut with a double bladed paver splitter or masonry saw.

5. Grout shall be placed in the void space between each paver after placement is complete. Excessive grout shall be removed for the surface of the pavers.

6. The final grade of the surface of the pavers shall not deviate more than 3/8 inch using a 10 feet long straightedge. The surface of the paver shall be 1/8 to ¼ inch above adjacent surfaces.

D. Measurement And Payment. No additional payment shall be made for DETECTABLE CONCRETE PAVER BLOCKS. It shall be considered incidental to the work required under bid item for the "6-inch Concrete Sidewalk".

****

2600 STORM SEWERS

A. General: All storm sewer construction and materials shall conform to Section 2600 of the AWPA "Standard Specifications and Design Criteria", and KCMO SUPPLEMENT except as otherwise specified herein and on the contract drawings. Note that all references to "Engineer" in the APWA guidance shall be interpreted as "Contracting Officer" for this contract.

B. Payment: Lump sum payment shall be made for the alterations to the storm sewer system shown in the drawings, and in the specifications. Payment shall constitute full compensation for all labor, materials, and equipment necessary to complete the item. Payment shall include pipes, manholes, concrete cradles and all other subsidiary items.

Item	Unit
"Utility Relocations"	Lump Sum

DIVISION II
CONSTRUCTION AND MATERIAL SPECIFICATIONS
SEWERS

SECTION 2600 STORM SEWERS

APPROVED AND ADOPTED THIS 17th DAY OF APRIL, 1996

KANSAS CITY METROPOLITAN CHAPTER
OF THE AMERICAN PUBLIC WORKS ASSOCIATION

Section	*Title*	*Page No.*
2601	**GENERAL**	26-1
2601.1	Description	26-1
2601.2	Definitions	26-1
2601.3	Specification Modification	26-1
2601.4	Revisions of Standards	26-1
2601.5	Applicable APWA Standards	26-1
2601.6	Cleanup	26-2
2602	**PIPE SEWER CONSTRUCTION**	26-2
2602.1	Scope	26-2
2602.2	Materials	26-2
2602.3	Construction Details	26-9
2603	**BORING AND JACKING**	26-17
2603.1	Scope	26-17
2603.2	Materials	26-17
2603.3	Construction Details	26-18
2604	**STRUCTURES**	26-20
2604.1	Scope	26-20
2604.2	Materials	26-20
2604.3	Construction Details	26-22
2605	**OPEN CHANNELS**	26-24
2605.1	Scope	26-24
2605.2	Materials	26-24
2605.3	Construction Details	26-28
2606	**MEASUREMENT AND PAYMENT**	26-30
2606.1	Measurement	26-30
2606.2	Payment	26-32

DIVISION II
CONSTRUCTION AND MATERIAL SPECIFICATIONS
SEWERS

SECTION 2600 STORM SEWERS

SECTION 2601 GENERAL

2601.1 Description: Storm sewer construction shall consist of furnishing all labor, materials, and equipment necessary for the complete installation of storm sewers and appurtenances in accordance with the Standard Drawings, Contract Drawings, General Provisions and Covenants, specifications and standards referenced herein, and these specifications. Unless otherwise noted within these specifications, the word "sewers" shall refer to pipe sewers, box culvert sewers, or open channels.

2601.2 Definitions: The term "Engineer" whenever referred to in these specifications shall mean the representative of the Governing Agency authorized to determine compliance of the Contractor's work with the requirements of the specifications as defined in the General Provisions and Covenants and/or Special Provisions.

2601.3 Specification Modification: It is understood that throughout this section these specifications may be modified or deleted by appropriate items in the Special Provisions or notes on the Contract Drawings.

2601.4 Revisions of Standards: When reference is made to a standard specification (ASTM, AWWA, MCIB, and other technical associations), the specification referred to shall be understood to mean the latest revision of said specification as amended at the time of the Notice to Bidders, except as noted on the Contract Drawings or as provided for in the Special Provisions.

2601.5 Applicable APWA Standards: Work incidental to construction of storm sewers shall be performed in accordance with the following APWA Standard Specifications:

Section 2100 Grading and Site Preparation.

Section 2200 Paving and Curbs.

Section 2306 Maintenance of Traffic.

Section 2400 Seeding and Sodding.

2601.6 Cleanup: Cleanup shall follow the work progressively. The Contractor shall remove from the project site all rubbish, equipment, tools, surplus or discarded materials, and temporary construction items.

Streets to be opened to local traffic at the end of the day's operation shall be cleaned of dirt or mud. All equipment and material stockpiles shall be secured for safe passage of vehicles and pedestrians.

Payment, as described in Section 2606, will be made for completed units of work. A completed unit of work includes the cleanup and all the other work necessary to complete the unit for payment.

SECTION 2602 PIPE SEWER CONSTRUCTION

2602.1 Scope: This section governs the construction of pipe storm sewers and appurtenances at the location and to the lines and grades indicated on the Contract Drawings.

2602.2 Materials:

A. Reinforced Concrete Pipe:

1. **Pipe:** Reinforced concrete pipe shall conform to the following ASTM Standards and be of the minimum strength designated herein or such higher strength as may be required by the Contract Drawings or Special Provisions:

   a. **Round Pipe**: ASTM C 76, Class III, Wall B.

   b. **Elliptical Pipe:** ASTM C 507, Class HE-III.

   c. **Arch Culvert Pipe:** ASTM C 506, Class A-III.

2. **Joints:**

   a. **Flexible Gasket:** Flexible gaskets may be either flat gaskets cemented to the pipe tongue or spigot, O-ring gaskets, or roll-on gaskets. All gaskets shall conform to ASTM C 443.

   b. **Cement Mortar:** Cement mortar shall consist of one part Type 1 portland cement by volume to three parts sand conforming to ASTM C 144 by volume mixed with sufficient water to form a workable stiff mortar paste.

c. **Plastic Compound:** This compound shall be a homogeneous blend of bituminous material, inert filler and suitable solvents or plasticizing compounds throughly mixed at the factory to a uniform consistency suitable for sealing joints of concrete pipe. The compound shall conform to the following requirements:

Bitumen, soluble in CS_2, percent by weight, minimum	45%
Ash, percent by weight	15-50%
Penetration, standard cone, 150g, 5 seconds, 25° C	
Trowel grade, bulk type	110-250mm
Extruded rope or flat tape type	50-120mm

The above penetration ranges include test tolerances.

d. **Preformed Plastic Compound:** This compound shall be either rope form or flat tape form conforming to ASTM C 990. Primer, as recommended by the manufacturer, shall be used to maintain the material in position while pipe sections are being joined.

B. **Corrugated Steel Pipe:** Pipe and coupling bands shall conform to the requirements of ASTM A 760/A 760M. Bituminous and/or other coatings shall be provided when required by the Special Provisions. All helical pipe shall have circumferential recorrugated ends with a minimum of 4 recorrugations on each pipe. Bituminous coating shall conform to AASHTO M-190. Minimum thickness of the metal after galvanizing shall be as follows:

Circular Culvert Pipe
(2-2/3" x ½" corrugations)

Under Roadways or In Street Right-of-Way		Under Railroads		Not Under Roadways	
Diameter	Minimum Thickness	Diameter	Minimum Thickness	Diameter	Minimum Thickness
12-21"	.064"	12-18"	.079"	12-30"	.064"
24-30"	.079"	21-24"	.109"	36-54"	.079"
36-54"	.109"	30-36"	.138"	60-84"	.109"
60-72"	.138"	42-84"	.168"		
84"	.168"				

Circular Culvert Pipe
(3"x 1" and 5" x 1" corrugations)

Under Roadways or In Street Right-of-Way		Not Under Roadways	
Diameter	Minimum Thickness	Diameter	Minimum Thickness
36-54"	.079"	36-54"	.064"
60-84"	.109"	60-84"	.079"

Arch Culvert Pipe
(2-2/3" x ½" corrugations)

Equivalent Diameter	Minimum Thickness	Span*	Rise*
15"	.064"	17"	13"
18"	.064"	21"	15"
21"	.064"	24"	18"
24"	.079"	28"	20"
30	.079"	35"	24"
36"	.109"	42"	29"
42"	.109"	49"	33"
48"	.109"	57"	38"
54"	.109"	64"	43"
60"	.138"	71"	47"

* Subject to manufacturing tolerances.

Arch Culvert Pipes
(3" x 1" corrugations)

Equivalent Diameter	Minimum Thickness	Span*	Rise*
36"	.064"	40"	31"
42"	.064"	46"	36"
48"	.064"	53"	41"
54"	.079"	60"	46"
60	.079"	66"	51"
66"	.079"	73"	55"
72"	.079"	81"	59"
78"	.109"	87"	63"
84"	.109"	95"	67"
90"	.109"	103"	71"

* Subject to manufacturing tolerances

C. **Structural Plate Pipe and Pipe Arches:** Structural plate and galvanizing shall conform to the requirements of ASTM A 761/A 761M. Bolts, nuts, and washers for connecting plates shall be galvanized in accordance with ASTM A 153. Bolts shall be not less than 3/4 inch diameter and conform to ASTM A 449. Nuts shall conform to ASTM A 563, Grade C.

D. **Vitrified Clay Pipe:** Vitrified clay pipe shall be extra strength vitrified clay pipe and shall conform to ASTM C 700. Compression joints for vitrified clay pipe and fittings shall conform to ASTM D 425.

E. **Ductile Iron Pipe:** Ductile iron pipe shall conform to ANSI/AWWA C151/A21.51 and shall be furnished with standardized mechanical or push-on joints conforming to ANSI/AWWA C111/A21.11. Minimum wall thickness shall be Class 52.

F. **Alternate Pipe Materials:** Pipe materials not covered in 2602.2A through 2602.2E may be utilized with the approval of the governing jurisdiction or Engineer and the following minimum criteria submitted.

1. Pipe material specification
2. Bedding conditions and materials
3. Backfill specifications applicable to installation
4. Quality Control required to insure proper installation
5. Manufacturers certification and test data that pipe supplied meets specification
6. Design calculations, for imposed loading as approved by Governing Jurisdiction, sealed by a Registered Professional Engineer licensed in the state of installation. Loading condition tables distributed by the pipe manufacturer may also be used if the table is computed by a Registered Professional Engineer. The tables shall state the limits of their use.
7. Hydraulic analysis and "n" values.

All other requirements specified for storm sewers are applicable.

G. **Granular Bedding Material:** Granular bedding material shall be crushed stone or pea gravel conforming to MCIB, Section No. 4 (Materials), Column No. 3, (Coarse Aggregate), or as approved by the Engineer.

H. **Flowable Backfill: Controlled Low Strength Material (CLSM)**

1. **Description.** This item shall govern for the backfilling of structures, pipes, and all spaces excavated for, and not occupied by new structures. It may be used as backfill of concrete walls, as backfill to new culverts in lieu of soil backfill, as fill in abandoned structures, and for other uses as approved by the Engineer.

   The **CLSM** shall be composed of portland cement, fly ash (optional), fine aggregate, coarse aggregate (optional), water, and a shrinkage compensator, proportioned as hereinafter provided or an acceptable mix as approved by the Engineer.

2. **Materials.**

   a. **Cement:** The cement shall be either Type I or II portland cement.

   b. **Fly Ash:** Fly ash, when used, shall conform to the requirements of ASTM C 618 Class C.

c. **Air Entrainment:** Admixture shall consist of an organic(s) compound which when added to the mix in accordance with the manufacturer's recommendation will result in air contents as prescribed by ASTM C 173 or C 231.

d. **Fine Aggregate:** Fine aggregate shall be washed and consist of clean, hard, durable, and uncoated particles of natural or manufactured sand or a combination thereof, with or without a mineral filler. Aggregate shall be free from frozen materials or injurious amounts of salt, alkali, vegetable matter or other objectionable material.

Sieve Size	Percent Passing
3/4 inch	100
No. 200	0-10

e. **Coarse Aggregate:** With the Engineer's approval, the CLSM backfill may be supplemented with sound, durable, clean rock or broken concrete (2" to 8" square) to minimize the quantity of CLSM material placed. The CLSM shall be placed to a depth of 2 feet. Clean aggregate may be added to the CLSM mixture until the top of the CLSM and the top of the aggregate are approximately equal. The process may be repeated as required until the fill is completed.

f. **Mixing Water:** Mixing water shall be clean, and free from injurious amounts of sewage, oil, acid, alkali, salt, or organic matter. (Only potable water will be acceptable without testing).

3. **Mix Design.** Unless otherwise shown on the Contract Drawings the Contractor may furnish either mix design type A or B. The following is given as typical mix design for trial mixes. Adjustments of the proportions of fine aggregate and/or water may be made to achieve proper solid suspension and optimum flowability with the approval of the Engineer. The mix design shall contain a shrinkage compensator as approved by the Engineer.

2602.2 H.3. 2602.2 H.6.

MIX DESIGN TYPE A (REMOVABLE) LESS THAN 100 PSI	MIX DESIGN TYPE B (PERMANENT) GREATER THAN 150 PSI
Cement.....144 lbs	100 lbs
Water.....396 lbs	417 lbs
Sand.....2698 lbs	2766 lbs
A/E.....13%	4%
Class C Fly Ash.....0	300 lbs

The shrinkage compensator shall be proportioned in accordance with the manufacturer's recommendations.

The CLSM shall be transit mix. No blade mixing will be allowed.

4. **Construction Methods:** Where CLSM is being placed over or adjacent to crushed stone backfill, a layer of filter fabric (ref. 2605.2C2) shall be installed between the two materials.

5. **Testing:**

   a. Bearing strength shall be determined using penetration testing in accordance with ASTM C 403.

   b. The flow of CLSM shall be tested in accordance with ASTM C 939.

   c. Unit weight and yield shall be tested in accordance with ASTM C 138.

   d. Air content shall be tested in accordance with ASTM C 231.

   e. Sample and remix sample shall be tested in accordance with ASTM C 172.

6. **References:** MCIB section 4-2., "Fly Ash Mix Designs" may be used in lieu of the above mixes as approved by the Engineer or governing jurisdiction.

2602.3 Construction Details:

A. **Trench Excavation:** Trenches shall be excavated to the width and depth as necessary to lay the sewer pipe to the grade line as indicated on the Contract Drawings. Deviation in indicated alignment will not be permitted except under special circumstances; subject to approval of the Engineer. Excavated materials are to be deposited beside trenches and excavations, beyond the reach of slides, transported to the spoil banks, or used for backfilling. The length of trench excavation opened at one time shall be limited depending on the nature of the soil or other safety considerations. Prior to excavation of the sewer trench in fill areas, fill shall be compacted to a minimum 90% of maximum density (as determined by ASTM D 698) to a minimum depth of 18 inches above the top of pipe.

Trenches shall be excavated to a width which will provide adequate working space and pipe clearances for proper pipe installation, jointing, and embedment. However, the limiting trench widths must comply with bedding class requirements as shown on the Contract Drawings. Over-excavation shall be replaced with granular bedding material.

The Contractor shall brace and shore all trenches in full accordance with Occupational Safety and Health Standards - Excavations; Final Rule 29 CFR Part 1926.

1. **Unclassified Excavation:** Unclassified excavation is defined as the removal of all material encountered regardless of its nature. All material excavated will be considered as Unclassified Excavation unless the Special Provisions specify Classified Materials.

2. **Rock Excavation:** Rock excavation is defined as the removal of all rock ledges 6 inches or more in thickness, detached rock or boulders having a volume of more than 1-1/2 cubic yards, and shale occurring in its natural state, hard and unweathered.

   A rock ledge is defined as a continuous body of rock; which may include interbedded seams of shale or other soft materials. Such interbedded soft material seams less than 12 inches in thickness will be included in the measurement of rock excavation. Such seams 12 inches or greater in thickness will be included only in the measurement of earth excavation.

No soft or disintegrated rock which can be removed with a pick or digging machine, no loose, shaken or previously blasted rock, no broken stones, and no rock which may fall into the trench from outside the limits of excavation will be considered as rock excavation. When solid rock is encountered in the trench, it shall be stripped of earth, and the Engineer notified.

When blasting is permitted by the Engineer, the Contractor shall use the utmost care to protect life and property. The Contractor shall comply with all laws, ordinances, and applicable safety code requirements and regulations relative to the handling, storage and use of explosives and protection of life and property, and he shall be responsible for all damage thereto caused by his or his subcontractor's operations.

The Contractor shall provide insurance as required by the General Provisions and Covenants and Special Provisions before performing any blasting. The governing agency shall be notified at least 24 hours before blasting operations begin.

3. **Earth Excavation:** Earth excavation is defined as the removal of all material not defined as rock.

4. **De-watering:** The Contractor shall remove any water which may accumulate, or be found in the trenches and other excavations made under the Contract.

   The Contractor shall form all dams, flumes or other works necessary to keep them clear of water while the sewers and their foundations, and other foundation works, are being constructed. All water shall be removed from such excavation in a manner to avoid damage to property.

5. **Cribbing and Sheeting:** The Contractor shall furnish, install, and maintain such sheeting, bracing, and other components, as may be required to support any excavation and to prevent any movement which could in any way injure or delay the work or endanger adjacent pavement, building, or other structures. Care shall be taken to prevent voids outside of the sheeting, but if voids are formed they shall be immediately filled and consolidated.

   For the purpose of preventing injury or property damage, contractor may leave in place all sheeting or bracing, and other items to be embedded in the backfill of the trench. No sheeting or bracing, however, shall be left in place within 5 feet of the surface without the written permission of the Engineer.

6. **Unstable Foundation:** Where materials encountered in the bottom of the trench are deemed as unsuitable by the Engineer to afford a sufficiently stable pipe foundation, the materials shall be removed to the depth and limits as ordered by the Engineer. Areas undergraded shall be backfilled with approved granular material or materials meeting the requirements of Section 2102.5 entitled "Undergrading."

7. **Protection of Property:** The Contractor shall satisfactorily shore, support, and protect any and all structures and all pipes, sewers, drains, conduits, and other facilities, and shall be responsible for any damage resulting thereto. The Contractor shall not be entitled to any damages or extra pay on account of any postponement, interference, or delay caused by any such structures and facilities being on the line of work, whether or not they are shown on the Contract Drawings; specifically, but not limited to, damage due to delay in utility relocation.

B. **Laying and Jointing:**

1. **Handling and Protection:** All pipe shall be protected during installation against shock and free fall, and be installed without cracking, chipping, breaking, bending, or damage to coating materials. Damaged pipe materials shall be replaced with new materials except as may be permitted by the Engineer.

2. **Grade Control:** Maximum deviation from indicated alignment of any pipe after installation and backfilling shall not be greater than 0.1 foot. All pipe shall have a continuous slope free from depressions that will not drain. The Contractor shall establish such grade control devices as are necessary to maintain the above tolerances.

3. **Laying:** The laying of pipe in finished trenches shall commence at the lowest point, and pipe shall be installed with the bell end forward or upgrade. All pipe shall be laid with ends abutting and true to line and grade. Pipe laid shall be carefully centered to form a sewer with a uniform invert.

4. **Bedding:** The class of bedding required shall be as indicated on the Contract Drawings or standard details except that as a minimum the bedding shall be granular bedding material placed to the spring line of the culvert, or in the case of an RCB, one-half of the height. Bedding shall be rodded, spaded, and consolidated as necessary to provide firm uniform support for the pipe, and not subject pipe to settlement or displacement.

5. **Jointing:** Preparatory to making pipe joints, all surfaces of the portions of the pipe to be jointed shall be clean and dry. Lubricants, primers, adhesives, and other substances that are used shall be compatible with the jointing material recommended or specified. All bell and spigot ends of concrete pipe shall be primed, as recommended by the pipe manufacturer, prior to application of a trowelable bitumastic plastic compound.

   No pipes may be trimmed unless ordered by the Engineer. Pipes having defects that do not cause their rejection shall be so laid as to place these defects where they will be of least consequence.

   Trenches shall be kept water-free and as dry as possible during bedding, laying, and jointing, and for as long a period as required to protect the pipe joints and concrete in structures.

   As soon as possible after the joint is made, sufficient bedding material shall be placed alongside each side of the pipe to offset conditions that might tend to move the pipe off line and grade.

   a. **Concrete Pipe:**

      1. **Plastic Joint Sealant:** Plastic joint sealant shall be applied to the tongue or spigot prior to its insertion into the bell or groove. A sufficient amount of sealant shall be used to fill the annular joint space with some excess. Wipe the outside surface of the joint with additional material to assure a complete seal.

      2. **Mortar:** When cement mortar is used, the joint surface shall be clean and wetted immediately before the joint is made. A layer of mortar shall be placed in the lower portion of the bell or groove of the installed pipe and on the upper portion of the tongue or spigot of the pipe section to be installed. The tongue or spigot shall then be inserted into the bell or groove of the installed pipe until the mortar is squeezed out on both the interior and exterior surfaces. The annular joint space shall be completely filled and the abutting joint sections flush and even, with excess mortar struck off.

3. **Flexible Gaskets:** Flat gaskets may be cemented to the pipe tongue or spigot. O-ring gaskets shall be recessed in a groove on the pipe tongue or spigot and confined by the bell or groove after the joint is completed. Roll-on gaskets shall be placed around the tongue or spigot and rolled into position as the joint is assembled. Flat gaskets and O-ring gaskets shall be lubricated as recommended by the manufacturer.

b. **Corrugated Steel Pipe:** Corrugated steel pipe shall be assembled and installed in accordance with the manufacturer's instructions and in conformance with the latest edition of Section 26 titled "Metal Culverts" of Division II AASHTO Standard Specifications for Highway Bridges. In case of a discrepancy between this specification and AASHTO Section 26 or the manufacturer's instructions, this specification shall govern.

Canvas or nylon slings (or something comparable that will not damage the pipe coating, i.e., appropriate lifting lugs) shall be used for all pipe handling. Pipe or plates shall not be rolled or dragged over gravel or rock and shall be prevented from striking rock or other hard objects during placement in trench or on bedding.

Corrugated steel pipe shall be placed on the bedding material starting at the downstream end. Pipes with circumferential seams shall be installed with their inside circumferential sheet laps pointing downstream.

Gaskets, if required, shall be furnished in accordance with the Contract Drawings and Special Provisions.

All pipes shall be protected by sufficient cover before permitting heavy construction equipment to pass over them during construction.

c. **Structure Connections:** Pipes connected to structures shall be cut parallel with the inside face of the structure for structures having plane walls and parallel with the spring line of the pipe for structures having curved walls. Projection of the pipe beyond the inside face shall not exceed 1 inch (measured at the springline for structures having curved walls.)

C. Backfill: All trenches and excavations shall be backfilled with suitable material placed and compacted in conformance with this section and Section 2102.6 entitled "Embankment."

1. Backfilling under pavements, driveways, sidewalks, and other paved areas:

Backfilling shall be placed as shown in Figure 1 except as approved by the Governing Agency.

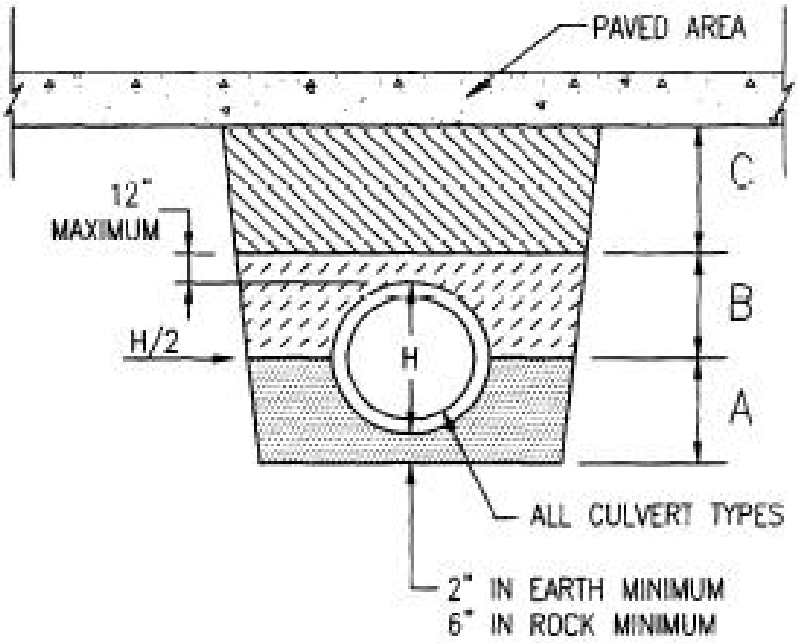

A- Granular bedding material.

B- Granular bedding material or Flowable Fill (CLSM).

C- Flowable Fill.

NOTE: Filter fabric at top of granular bedding where flowable fill (CLSM) used.

Figure 1

2. Backfilling in areas other than pavements, driveways, sidewalks, and other paved areas:

Backfilling shall be placed as shown in Figure 2 except as approved by the Governing Agency.

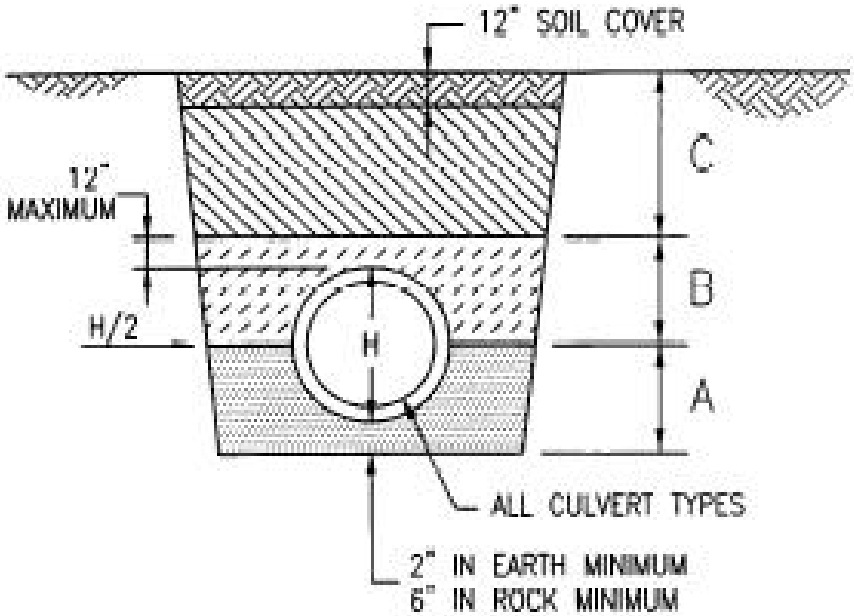

A- Granular bedding material.

B- Granular bedding material or hand compacted soil - 90% of max. density using ASTM D 698. Maximum lift thickness 6". Granular bedding material shall be used in Zone D for all pipe except reinforced concrete pipe.

C- Granular bedding material or compacted soil - compact to approximate density of adjacent soil but not less than 90% of max. density using ASTM D 698.

Figure 2

3. Backfilling around inlet structures:

Backfilling shall be placed as shown in Figure 3 except as approved by the Governing Agency.

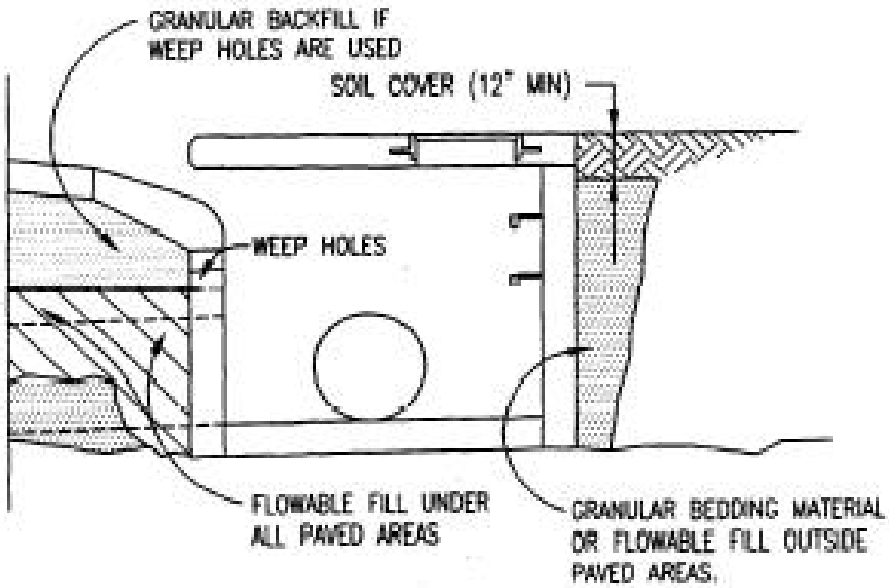

Figure 3

D. Structural Plate Erection: Structural plate pipe, fabricated from hot-dip galvanized steel plates, shall be assembled by bolting individual plates together to erect the pipes or structures as shown on the Contract Drawings. Bolts, fittings, and other appurtenances shall be furnished by the plate manufacturer. All materials shall be handled in such a manner that they are not chipped, dented, or bent. If the base metal is exposed in any way, it shall be rejected or repaired to the satisfaction of the Engineer.

SECTION 2603 BORING AND JACKING

2603.1 Scope: This section governs construction of steel casings, complete with bulkheads and sand fill, by boring and/or jacking at the locations and to the lines and grades indicated on the Contract Drawings, or where constructed at the Contractor's option, when approved, to bypass obstructions without open cutting.

2603.2 Materials:

A. Steel Casing:

1. Steel casing for bored or jacked construction shall conform to ASTM A 139.

2. Steel shall be grade B under railroads and grade A for all other uses.

3. Minimum wall thickness for steel casing shall be in accordance with the following table:

Diameter of Casing	Under Railroads	All Other Uses
24"	0.406"	0.281"
26"	0.438"	0.281"
28"	0.469"	0.312"
30"	0.469"	0.312"
32"	0.500"	0.312"
34"	0.500"	0.312"
36"	0.500"	0.344"

4. Casing joints shall be welded by a certified welder in accordance with ANSI/AWWA C206.

B. End Seals: End seals shall be brick conforming with Section 2604.2.F of these specifications. Mortar shall comply with Section 2604.2.G of these specifications.

C. Sand Fill: Sand fill shall comply with ASTM Designation C 33 or MCIB Section 4, Fine Aggregate. Moisture content of the sand shall not exceed 0.5 % .

2603.3 Construction Details:

A. Boring and Jacking:

1. Prior to starting work, complete details of the methods and the liner material to be used shall be submitted to the Engineer for approval.

2. The maximum allowable deviation from indicated alignment and grade shall be as follows except when altered by the Contract Drawings or Special Provisions:

   a. Alignment 1.0%

   b. Grade 1.0%

B. Casing Installation:

1. The steel casing shall be advanced in a continuous operation without interruption. Sections of the casing pipe shall be welded together to form a continuous conduit capable of resisting all stresses, including jacking stresses. The casing in its final position shall be within alignment and grade tolerances specified in Section 2603.3.A.2. There shall be no space between the earth and the outside of the casing. Any voids which do occur shall be filled by pressure grouting.

2. Boring operations shall be performed by experienced crews using a rotary type boring machine designed especially for this purpose. Boring shall be performed in a manner to prevent disturbing the overlying and adjacent materials.

3. **Jacking:**

   a. Jacking frame, guides, blocking, head, and reaction devices shall be arranged to apply uniform pressure about the casing circumference without damage to the casing material, and to maintain alignment within specified tolerances.

   b. Jacking reaction device shall provide adequate resistance to withstand 200 percent of the maximum jacking pressure.

   c. Provide jacks of adequate number and size for the required jacking pressure; but not less than two jacks.

d. Maintain jacking pit and pipe installation in such condition that drainage does not accumulate. Control and disposition of surface and subsurface water at the site of jacking operations shall be the Contractor's responsibility.

e. Excavation at the heading shall not be extended more than 1 inch outside the top and sides (upper 300-degree sector) of the casing and shall be true to grade at the invert (lower 60-degree sector).

f. Once jacking begins, it shall proceed without interruption until installation of the entire length of the jacked casing is complete.

4. **Excavation in Jacked Casings:** Perform excavation within jacked casings by hand or machine methods as necessary to remove the materials encountered without disturbing the overlying material. The jacked casing shall be advanced a sufficient distance ahead of the excavation face and/or shield used as necessary to protect the workman and the work, and to prevent the uncontrolled entry of unstable materials into the casing.

5. **Unstable Materials:** If materials are encountered during casing installation that cannot be excavated safely or without creating voids around the exterior of the casing, the Contractor shall discontinue casing installation and stabilize such materials by dewatering, chemical soil stabilization, grouting, or other methods, and/or modify equipment and procedures as necessary to complete the casing installation.

C. **Sewer Pipe Installation:**

1. Pipe shall be placed inside the casing to the indicated line and grade by the use of wood skids or other equivalent methods. The wood shall be pressure treated with creosote, pentachlorophenol, or salt-type preservative in accordance with AWPA C2. Cut surfaces shall be given 2 heavy brush coats of the same preservative. The wood skids shall be securely fastened to the sewer pipe with steel straps.

2. End seals shall be constructed after the sewer pipe is installed and approved.

3. The annular space between the casing and sewer pipe shall be filled with sand blown in so that all space is filled without disturbing the alignment and grade of the sewer pipe.

SECTION 2604 STRUCTURES

2604.1 Scope: This section governs the performance of all work necessary for construction of cast-in-place and precast concrete structures for inlets, manholes, junction boxes, box culverts, headwalls, and incidental structures. Masonry or brick structures shall not be allowed under these Specifications.

2604.2 Materials:

A. **Concrete Mixes:** Concrete shall be MCIB Mix Number A564-3/4-4 or A543-1-4 at the Contractor's option; except concrete used for soil stabilization, pipe cradles, filling, leveling courses, and other similar purposes may be either MCIB Mix Number A440-3/4-4 or A473-1/2-4.

B. **Concrete Materials:**

1. Concrete materials shall conform to MCIB Specification Section 4 entitled "Materials," except that total shale, coal, and lignite content shall not exceed 0.5 percent by weight, and clay content shall be zero.

2. Concrete shall conform to all requirements of MCIB Section 5 entitled "Concrete Mix Design Tables", and the compressive strength of each mixture shall be as designated therein.

C. **Reinforcing Steel:** Reinforcing bars shall conform to ASTM A 615/A 615M, Grade 60. Welded steel wire fabric shall conform to ASTM A 185.

D. **Precast Concrete Structures:**

1. **Manholes:** Precast manholes shall conform to ASTM C 478. Joints between concrete manhole sections shall be made with plastic joint compound or preformed plastic compound as specified in Section 2602. Minimum cross sectional area of preformed compound shall be 1 inch square or 1.25 inches diameter.

2. **End Sections for Concrete Pipe:** Shall be flared end sections of the pipe manufacturer's standard design, and shall meet all applicable requirements of ASTM C 76 for Class II or higher classes of pipe.

3. **Rectangular Structures:** Shall conform to the inside dimension indicated on the Contract Drawings and be designed for the following loads:

   a. H-20 live load for all structures in/or under pavement, shoulders, driveways, and other traffic areas.

b. 2,000-lb wheel live load for curb opening inlets and junction boxes in non-traffic areas.

c. 50 pcf equivalent fluid pressure for soil pressure on vertical walls.

d. 120 pcf for unit weight of soil cover on top slabs.

E. **Air Entrainment:** All concrete shall be air entrained, and minimum strength requirements shall be as specified in Section 2604.2.B.2 above.

F. **Brick:** Brick shall conform to ASTM C 32, Grade SM, free from cracks and checks, and emit a metallic ring when struck with a hammer.

G. **Cement Mortar:** Pre-mix mortar non-shrink or expansive grout in mortar for packing pipe in openings of precast structures, setting castings, and other incidental work shall consist of one part portland cement and two parts sand by volume mixed with sufficient water to form a workable stiff grout.

H. **Metal Castings:** Castings shall be gray iron conforming to ASTM A48, Class 35B. Castings shall be of the shape, dimension, and minimum weight indicated on the Contract Drawings, and be free from manufacturing defects. If requested by special order, castings shall be cleaned and painted with one coat coal tar before delivery. Bearing surfaces between frames and covers for installation in all areas shall be machined to provide even seating.

I. **Steel End Sections:** Steel end sections shall be fabricated from galvanized base metal as specified in Section 2602, and shall be flared end sections of the metal pipe manufacturer's standard design. End sections shall be furnished with a steel toe plate. Bituminous coating is not required.

J. **Toe Walls:** Flared end sections for concrete and steel pipe shall be set on a concrete toe wall centered on the end of the section. Toe walls shall be 8 inches thick by 24 inches deep by the width of the end section.

Section 2604.3 Construction Details:

A. **Concrete Structures:** Concrete construction shall conform to the following MCIB Standard Specifications:

Section 8 - Placing of Concrete
Section 9 - Curing and Protection
Section 10 - Cold Weather Concrete
Section 11 - Hot Weather Concrete
Section 13 - Forms
Section 24 - Finishing
Bulletin 6 - Concrete Inspection
Bulletin 12- Reinforcing Steel - Handling and Placing

1. **Precast Structures:** The Contractor may, at his option, construct precast concrete inlets, junction boxes, and box culverts, in lieu of the cast-in-place structures indicated on the Contract Drawings; except that all concrete base slabs for pre-cast inlets, manholes, and junction boxes may be cast-in-place. Solid concrete brick or block shall be used to block inlets and similar structures to grade during placement of base slab concrete.

   Precast concrete box culvert sections shall be installed on a 4-inch leveling course of untreated compacted aggregate conforming to Section 2202. Leveling courses shall extend 1 foot past the line of the box section, and be finished to a true plane surface to provide uniform bearing for the precast section.

   Any adjustments required for precast structures to meet field conditions shall be at the cost of the Contractor.

2. **Finishing:**

   a. **Formed Surfaces:** Immediately following removal of the forms, fins and irregular projections shall be removed. Form tie connections, holes, honeycomb spots, and other defects shall be chipped to ensure the voided area is exposed, and shall be chipped back to solid material. These areas shall be thoroughly cleaned, saturated with water, and pointed with a grout approved by the Engineer. The repaired surfaces shall be cured in accordance with MCIB Specification Section 9.

   b. **Exposed Slabs:** Finish for exposed slabs shall be wood float texture in accordance with MCIB Specification Section 24. Exposed edges shall be beveled or edged with a radial tool.

3. **Form Removal:** Forms shall remain in place until the concrete has attained sufficient strength to support loads imposed by backfilling, construction, and traffic, but not less than:

   a. **Walls:** Forms shall remain in place for a minimum of 5 days or until the concrete reaches a minimum strength of 2000 p.s.i.

   b. **Slabs:** Form shall remain in place for a minimum of 7 days or until the concrete reaches a minimum strength of 3000 p.s.i.

B. **Invert Channels:** Form concrete invert channels in manholes, inlets, and junction boxes to make changes in direction of flow with smooth curves of as large a radius as permitted by the inside dimension of the structure. Grade changes and transitions shall be smooth and uniform, and all parts of the invert channel and adjacent floor shall slope to drain. Channel bottom shall be finished smooth without roughness or irregularity. Invert channels for precast concrete structures may be cast integrally with the structure base slabs at the Contractor's option.

C. **Excavation and Backfill:** All excavation and backfill shall be done in conformance with Section 2102 entitled "Grading."

   1. **Excavation:** Excavation for structures shall be carried a sufficient distance, but not less than 18 inches outside the limits of the structure, to permit efficient erection and removal of forms and laying of masonry units, and shall be sloped, stepped, or braced as required for stability. Unsuitable soils encountered at the bearing elevation of the structure shall be removed and replaced with either fill concrete or compacted granular material at the Contractor's option. Over excavation shall be corrected in like manner. The Contractor shall maintain the excavation free of standing water until backfilling is complete.

2. **Backfilling:** Backfilling shall conform to the requirements of Section 2602.3C and as follows:

   a. No backfill shall be placed over or around any structure until the concrete or mortar therein has attained a minimum strength of 2000 p.s.i. and can sufficiently support the loads imposed by the backfill without damage.

   b. The Contractor shall use utmost care to avoid any wedging action between the side of the excavation and the structure that would cause any movement of the structure. Any damage caused by premature backfill or by the use of equipment on or near a structure will be the responsibility of the Contractor.

   c. Backfill shall be placed and compacted on all sides of the structure simultaneously, and operations shall be so conducted that the backfill is always at approximately the same elevation on all sides of the structure.

   d. No excavated rock larger than 4 inches maximum dimension shall be placed within 1 foot of the exterior surface of any structure except as allowed with CLSM placement.

SECTION 2605 OPEN CHANNELS

2605.1 Scope: This section includes all work for construction of open channel lining at the location, and to the lines, grades, and dimensions indicated on the Contract Drawings. Grading shall have been previously completed in accordance with Section 2100, "Grading and Site Preparation."

2605.2 Materials:

A. **Concrete:** Concrete shall be MCIB Mix Number A511-3/4-2. Reinforcing steel shall conform to ASTM A 615, Grade 60. Welded steel wire fabric shall conform to ASTM A 185.

B. **Stone:** Stone for riprap, grouted riprap, and gabion linings shall consist of quarried rock and be sound, durable, and angular in shape. No more than 10 percent shall have an elongation greater than 3:1, and no stone shall have an elongation greater than 4:1. Material shall be free from cracks, seams, or other defects. Shale and stone with shale seams are not acceptable.

1. The minimum unit weight of the stone shall be 155 pounds per cubic foot as computed by multiplying the specific gravity times 62.4 pounds per cubic foot.

2. Not more than 10 percent of the stone shall exhibit splitting, crumbling, or spalling when subject to 5 cycles of the sodium sulfate soundness test in accordance with ASTM C 88.

3. **Riprap and Grouted Riprap:** Stone shall be of the following gradations:

   Riprap and grouted riprap shall have a minimum thickness of 15 inches, or 1.5 times as thick as the larger stones, whichever is greater. The thickness for grouted riprap shall be measured from the top of the grout line to the bottom of the riprap. At least 60 percent of the mass shall be of pieces having a volume of one cubic foot or more and the pieces shall be well graded. No more than 6 percent of the stones shall weigh less than 10 pounds.

4. **Gabion Fill Stone:** Stone shall be of the following gradations:

U.S. Standard Square Mesh Sieve	Percent Passing by Weight
10"	100
8"	85 - 100
6"	0 - 15
4"	0 - 10
3"	0

   Stone shall be graded within the above limits as required to provide a unit weight in-place of 100 pounds per cubic foot or greater.

C. **Filter Blanket:** Filter blanket may be either of the following types at the Contractor's option:

1. **Granular Filter:** Granular filter material shall consist of sound, durable rock particles conforming to the following gradation:

Sieve Size	Culmative Percent Passing By Weight
1"	100
½"	70-100
No. 4	50-85
No. 10	35-70
No. 40	20-50
No. 100	15-40

2. **Filter Fabric:** Filter fabric shall consist of woven or nonwoven fabric. The synthetic fiber of either the woven or nonwoven fabric shall consist of polypropylene, nylon, or polyester filaments. The percent open area shall be not less than 4 percent nor more than 10 percent. The cloth shall provide an Equivalent Opening Size (EOS) no finer than the U.S. Standard Sieve No. 100. In addition, filter fabric shall meet the following physical requirements:

   a. **Tensile Strength:** Minimum grab tensile strength, both warpwise and fillingwise, shall be 200 pounds when tested in accordance with ASTM D 5034, using a 4-inch by 6-inch specimen and a jaw speed of 12 inches per minute.

   b. **Elongation:** Grab elongation shall be not less than 15 percent nor more than 60 percent, both warpwise and fillingwise, when tested in accordance with ASTM D 5034.

   c. **Tear Strength:** Minimum trapezoid tear strength shall be 100 pounds, both warpwise and fillingwise. Method of test for woven fabrics shall be in accordance with ASTM D 1117.

   d. **Bursting Strength:** Minimum bursting strength shall be 400 psi when tested in accordance with ASTM D 3887.

   e. **Seam Strength:** Woven fabric shall have a minimum seam-breaking strength of 180 pounds when tested in accordance with ASTM D 1683, using a jaw speed of 12 inches per minute.

   f. **Width:** Filter fabric shall be furnished in widths of not less than 6 feet.

D. Gabion Baskets: Baskets shall be of the dimensions indicated on the drawings and be fabricated using hexagonal triple-twist wire mesh.

1. **Wire:** Wire shall be galvanized steel having a minimum tensile strength of 60,000 psi, and shall be zinc coated in accordance with ASTM A 641 Class 3.

2. **Wire Mesh:** Maximum dimension of the mesh opening shall be 4-1/2 inches or less, and the maximum area of the mesh opening shall not exceed 12 square inches. Wire shall be 0.120-inch (minimum) diameter.

3. **Selvedge Wire:** Selvedge wire shall be 0.1535-inch (minimum) diameter. All perimeter edges of the mesh forming the gabion shall be securely selvedged so that joints formed by tying the selvedges have a strength equal to or greater than the body of the basket.

4. **Lacing and Stay Wire:** Wire shall be 0.0866-inch diameter or larger. Other connection methods, such as stainless steel clips, may be substituted with approval of the Engineer.

5. **Diaphragms:** Gabions shall be divided into cells not greater than 4 feet in width by wire mesh diaphragms. Diaphragms shall be factory secured to the base of the basket by continuous spiral wire.

6. **PVC (Polyvinyl Chloride) Coating:** Where specified in the Contract Drawings, all wire used in the fabrication of the baskets and in the wiring operations during construction shall, after zinc coating, have an extruded coating of PVC. The coating shall be gray in color ranging between series 26187 and 26293 or between series 26373 and 26375, semigloss, as per Federal Standard 595B. The PVC coating shall be a nominal thickness of 0.02165 inches and shall nowhere be less than 0.015 inches in thickness. The coating shall be resistant to the destructive effects of immersion in acidic, salt or polluted water, exposure to ultraviolet light, and abrasion and shall retain these characteristics after a period of not less than 3,000 hours under test in accordance with ASTM G-23.

E. Grout: Grout for grouted riprap shall be a sand/cement mixture containing 420 pounds of cement per cubic yard with 6 percent air entrainment. It shall have a consistency thin enough to permit thorough penetration of the grout into the joints and voids between the stones.

F. Sod: Sod shall conform to the requirements of Section 2402 for Kentucky Blue Grass Sod.

G. **Seed:** Seeding shall conform to the requirements of Section 2401. Type "A" seed shall be used.

2605.3 Construction Details:

A. **Foundation Preparation:** After completion of grading in accordance with Section 2100, the area to receive channel lining shall be trimmed and dressed to conform to the cross sections indicated on the drawings within a tolerance of plus or minus 1 inch from the theoretical slope lines and grades. All deleterious materials shall be removed from the foundation area.

B. **Concrete Lining:**

1. **Preparation:** Subgrade shall be moistened by sprinkling. Forms shall be securely staked, braced, and set to line and grade. Reinforcement and tie bars shall be held in position by bar chairs, concrete brick, or other approved devices.

2. **Placing and Finishing:** Place, consolidate, and strike off concrete to the thickness indicated on the drawings. Concrete shall be tamped or vibrated to eliminate all voids and bring sufficient mortar to the top for finishing. Surface finish shall be a wood-float finish. Round all edges and joints with a 1/4 inch radius edging tool, except contraction joints may be sawed to a depth of 30 percent of the thickness of the concrete lining after concrete has hardened but before uncontrolled cracking occurs. Apply curing membrane as specified in Section 2208.2.F.

C. **Filter Blanket:**

1. **Granular Filter:** Place granular filter to its full thickness in a single operation. Construction methods shall be such that the material is placed without segregation. Compaction of granular filter material is not required.

2. **Filter Fabric:** Place filter fabric with its long dimension horizontal and lay free of tension, stress, folds, wrinkles, or creases.

   a. Place to provide 18 inches minimum overlap at each joint and anchor to prevent dislocation during construction of overlaying material.

   b. Fabric shall not be left exposed more than two weeks prior to placement of overlaying material. Tracked or wheeled equipment or vehicles shall not be operated on the fabric.

D. **Riprap Placement:** Riprap shall be placed on the prepared foundation in a manner which will provide a reasonably well-graded mass of stone with the minimum practicable percentage of voids. The entire mass of stone shall be placed so as to be in conformance with the lines, grades, and thicknesses indicated. A filter blanket of filter fabric conforming to Section 2605.2.C.2 shall be constructed under all riprap, grouted or ungrouted. Riprap shall be placed to full-course thickness in one operation and in such a manner as to avoid displacing the fabric. The Contractor shall place the riprap in such a way as to not tear, puncture, or shift the fabric. Riprap shall not be dropped more than 3 feet when being placed directly on the fabric. Tears or rips in the fabric shall be repaired with fabric lapped a minimum of 12 inches in all directions.

1. **Placing:** Placing of riprap in layers, or by dumping into chutes, or by similar methods likely to cause segregation will not be permitted.

2. **Distributing:** The larger stones shall be well distributed and the entire mass of stone shall conform to the specified gradation. All material shall be so placed and distributed that there will be no objectionable accumulations of either the larger or smaller sizes of stone.

3. **Hand Placing:** It is the intent of these specifications to produce a fairly compact riprap protection in which all sizes of material are placed in their proper proportions. Hand placing or rearranging of individual stones by mechanical equipment may be required to the extent necessary to secure the specified results.

E. **Grouted Riprap:** Riprap shall be placed in conformance with Section 2605.3.D (Riprap Placement). Grout shall be placed in such a manner to produce a securely bound solid mass with the voids completely filled.

After the voids have been completely filled, the surface shall be swept clean with a stiff bristle broom and water to expose the stone surface and natural color of the stone. Most stones should protrude 1 to 3 inches above the grout unless otherwise specified on the Contract Drawings.

The grout shall be cured by any of the methods specified for concrete sidewalks and driveways in Section 2301.3.C, except that transparent membrane shall be used in lieu of white pigmented membrane.

During cold weather, the limitations and protection requirements of concrete as specified in the most current MCIB Standard Concrete Specifications shall apply to the grouting.

A toewall shall be constructed at the upstream and downstream ends of all grouted riprap unless another permanent lining material is constructed to continue the channel. The toewall shall be constructed across the entire section and shall be a minimum of 18 inches deep below the bottom of the grouted riprap and 12 inches wide. The toewall material shall be grouted riprap.

F. **Gabion Lining:**

1. **Assembly:** Assemble each gabion unit by binding all vertical edges together with a continuous piece of connecting wire stitched around the vertical edge with coils spaced at 3 inches or less. Set empty units to line and grade and join units by stitching with connecting wire along adjoining edges. Install and securely fasten internal tie wires in each cell if necessary to retain the shape of the cell during filling operations.

2. **Filling:** Fill gabion cells with stone carefully by hand or machine to provide a minimum of voids and avoid bulges and distortions of the gabion. After filling, secure the lid to the sides, ends, and diaphragm by stitching with connecting wire.

3. **Filter Fabric/Gabion Unit Placement:** A filter blanket of filter fabric conforming to Section 2605.2.C.2 shall be constructed under all Gabion Linings. The Contractor shall place the gabions in such a way as to avoid tearing, puncturing, or shifting the fabric. Tears or rips in the fabric shall be repaired with fabric lapped a minimum of 12 inches in all directions.

G. **Sod:** Sod shall be as specified in Section 2402, except all sod placed in drainage channels or ditches, including both the side slopes and bottom, shall be anchored as specified in Section 2402.3.C.1, Anchoring Sod.

SECTION 2606 MEASUREMENT AND PAYMENT

2606.1 Measurement: The quantities of accepted work will be measured in the following units. All measurements will be plan measure except for authorized changes.

A. **Pipe:** By the lineal foot of each size and type. Measurement will be to the nearest 0.1 foot for each line between structures, and made to the inside face of the connecting structure. Precast or prefabricated end sections will be excluded from the pipe measurement.

B. **Prefabricated or Precast End Sections:** By the number of each size and type.

C. **Concrete Box Culverts:** By the lineal foot of each size and type. Measurement will be along the center line of the culvert between the back faces of the headwalls. Headwalls will be measured separately as "Structures."

D. **Structures:** Inlets, manholes, headwalls, endwalls, catch basins, and other similar structures will be measured by the number of each size and type listed in the Agreement.

E. **Casings:** Casings for pipe installation by boring and/or jacking methods will be measured by the lineal foot of each size and type.

F. **Pipe Encasement:** Pipe encasement will be measured by the lineal foot of each size and type.

G. **Concrete Channel Lining:** By the square yards of surface area. Measurement will be parallel to sloping surfaces.

H. **Filter Blanket:** By the square yards of surface area covered by the blanket. Laps, splices, and anchorage for fabric blanket will be excluded from the measurement. Measurement will be parallel to sloping surfaces.

I. **Riprap:** By the cubic yard on the basis of plan dimensions as the product of surface area times thickness.

J. **Grouted Riprap:** By the square yards of surface area. Measurement will be parallel to sloping surfaces. Measurement and payment of the filter fabric shall be included in the cost per square yard of the grouted riprap.

K. **Gabions:** By the cubic yard on the basis of plan dimensions.

L. **Sodding**: Measurement shall be by the lineal foot of pipe over which sod is placed or by the lineal foot of sodded ditch unless otherwise specified. For lined (riprap, grouted riprap, or concrete) channels, sod placement and/or repairs shall be incidental to the cost of placement of the lining material.

2606.2. 2606.2.

2606.2 Payment: Payment will be made at the respective unit or lump sum price listed in the Agreement, and shall be full compensation for all labor, materials, and equipment necessary to complete the respective unit in place. There will be no separate measurement or payment for any item of work not specifically identified and listed in the Agreement, and all such work shall be considered a subsidiary item with all costs pertaining thereto included in the prices for other items listed in the Agreement. At the Engineer's option, partial payment may be made for any item listed in the Agreement, providing that the Contractor is diligently and satisfactorily pursuing full completion of such partially complete item in accordance with the approved job progress schedule.

2610 ADJUSTMENT OF MAN-HOLES

A. General: Adjustment of the height of existing manholes and other structures to match proposed grades and elevations shall be made as required. This item of work shall also include the penetration of existing manholes and other structures with new storm sewer pipe and the reshaping of manhole inverts.

B. Payment : Payment for adjustment of manholes shall be incidental to construction.

WATER MAIN RELOCATION

Project Number _____ DACW41-03-B-0xx

Project Title Prospect Bridge Replacement & Brush Creek Channel Mod

1. GENERAL:

The Work to be performed under this section consists of furnishing all labor, materials (except those materials specifically listed under MATERIALS FURNISHED BY OWNER), equipment, tools, superintendence, and all services necessary to perform water main and water service line work.

2. CONTRACT SPECIFICATIONS:

The work shall conform to these Project Requirements and to the latest revision of the Standards and Specifications for Water Main Extensions and Relocations which is made a part hereof by reference (excluding therefrom the Instructions to Contractor Section) except as modified herein.

The term Director as used in the aforesaid Standards and Specifications and herein shall mean the Director of the Water Services Department of the City.

The term Engineer as used in the aforesaid Standards and Specifications shall mean the Engineering Services Division of the Water Services Department of the City, or any engineer or agent designated by the DIRECTOR in responsible charge of the Work.

In cases where the Standards and Specifications for Water Main Extensions and Relocations, as referenced, conflict with these Project Requirements, the Project Requirements shall govern.

A Copy of the aforesaid Standards and Specifications is available free of charge at the Water Services Department on the Seventh Floor of Oak Tower located at 324 East 11th Street.

3. MATERIALS FURNISHED BY THE OWNER:

The Owner will furnish, upon written request from the Contractor and without charge to the Contractor, the materials listed below. All other materials required to complete the Work in accordance with the Contract Documents shall be furnished and installed by and at the expense of the Contractor.

Item	Quantity
5" KC1 Hydrant	As Required to Complete the Work

All material furnished by the Owner which is damaged, lost or stolen after its acceptance by the Contractor shall be replaced at the expense of the Contractor with like material purchased from the Owner.

The Contractor, or his authorized representative, shall sign a bill of receipt for al materials withdrawn from the Water Services Department Stores.

All materials withdrawn from the Water Services Department Stores that are not incorporated in the Work shall be returned to the Water Services Department Stores. All such material not returned shall be charged to the Contractor and deduction therefore shall be made from the final payment estimate.

4. CONNECTIONS TO EXISTING MAINS:

The Contractor shall furnish and install all fittings necessary for connections to the existing water mains at the locations shown on the Plans. No connections to existing mains shall be started without prior approval of the Director.

It shall also be the responsibility of the Contractor to make any and all excavations and backfill as required, and furnish all labor, equipment, and material necessary to complete the connections as detailed on the Plans. The Contractor shall maintain, barricade, repair, restore, and protect all excavations and disturbed areas. All bends, tees, etc., shall be provided with adequate backing by the Contractor as required in Section 02669 – Thrust Restraints of the Standards and Specifications.

The Contractor shall notify all Water Services Department customers affected by the Work of making the connections as to the time of day and the span of time required to make said connections. When the closing of a valve to make the connections affects a customer who cannot be without service, the Contractor shall arrange to supply temporary service and schedule the time which is most convenient to the customer for making the connection to the existing mains. No extra compensation will be allowed for providing temporary service or making the connection at a time other than normal working hours.

5. BACKFILL:

All backfill in sidewalk and street areas and all pipe embedment shall be thoroughly compacted in strict conformance with Section 02200 – Excavation and Backfill of the Standards and Specifications.

6. UTILITY CASINGS:

All utility casings shall be in strict conformance with Section 02320 – Utility Casings o the Standards and Specifications.

7. FACILITIES:

7.01. Water: The Owner will furnish without charge all necessary water for filling, flushing, and testing the completed line and other construction requirements. The Contractor shall make arrangements with the Owner for all water used. Use of City's water facilities shall be at the direction of the Water Services Department so that water service to customers served by the facilities is not impaired. Under any conditions, water shall not be wasted. Any water furnished by the Owner must be obtained from the Owner's existing main.

All material and service needed to obtain water for construction purposes shall be provided by the Contractor at his sole cost and expense.

7.02. Operation of Existing Valves: The Contractor shall not operate any valves on the Water Services Department's system. The operation of all valves on the existing distribution system shall be performed by the Owner. If the Contractor desires the operation of any valves, he shall make a request to the Water Services Department for such operation, giving at least twenty-four (24) hours notice. The hydrant branch valves may be operated in the presence of a representative of the Water Services Department with no official advance notification.

7.03. Power: All power for lighting, operation of the Contractor's plant or equipment, or for any other use which maybe required for proper completion of the Work to be performed shall be provided by the Contractor at his sole cost and expense.

8. WATER SERVICE PERMITS AND FEES:

The Contractor will be required to obtain Water Service Permits as required in the Regulations of the Water Department, dated November 2001. However, the Contractor will not be required to pay any permit fees for service permits or service taps.

The Contractor will be required to pay all permit fees of other City Departments.

9. POSITION, LINE OR GRADE:

The Contractor shall furnish all labor and materials necessary in laying out the work. The Contractor shall locate the starting point, end point, the point of intersection of each curve or bend, and points on the centerline of the main as shown on the Plans. The Contractor shall be responsible for setting any offset stakes he may require or required by the Engineer.

10. DISINFECTION

All disinfection work shall be in strict conformance with Section 02675 _Water Main Testing, Disinfection, and Dechlorination of the Standards and Specifications,(ATTACHED) with the following:

After the mains have been properly prepared, the Contractor will disinfect the mains, at no additional cost to the Water Services Department. The Contractor will furnish all necessary assistance for the operation of valves, etc.

After dechlorination and final flushing, and prior to putting the main into service, a passing Bac-T test shall be made on the main by the City. If the Bac-T test fails, the Contractor shall disinfect the main again. The Contractor shall do all the remaining work such as backf;Iling, paving, etc, which is necessary before the mains are put into service.

11. WATER SERVICES AND RECONNECTIONS:

All existing service lines connected to existing mains that are to be abandoned shall be disconnected from said mains and reconnected to the new mains. These reconnections shall be made by the Contractor.

The Contractor will perform only one water service transfer at a time. After the reconnection, the immediate area will be prepared for sod restoration before the contractor is permitted to begin additional transfers.

If the Contractor chooses to use multiple crews for water service transfers, one crew may perform the transfer of the water services while another crew performs restoration. Cleanup must be completed on all water service transfers each day.

Installation of water service lines beneath streets and driveways shall be done by drilling or approved trenchless methods unless rock or other site conditions require open cut excavations.

Contractor will replace all non-copper service connections with Type “K” copper (with like size, %“ minimum) from the main to curb stop. Existing copper service connections can be spliced to extend the existing service to the new main. If a shutoff does not exist within street right-of-way, a curb stop and box shall be installed at a location selected by Water Services Department.

The Contractor shall furnish all material, equipment, and labor for the complete installation in accordance with Regulations of the Water Department dated November 2001. No service taps will be permitted until the new main is put in service. Existing water meters and tiles that require relocation or adjustment, either vertically or

horizontally, because of construction, shall be adjusted by the Contractor. No additional payment will be allowed for water service and meter adjustment.

Service taps to the main shall be made in accordance with Regulations of the Water DeDartment with the following exceptions:

Replace Section 4.02 (a) with "(a) Tapping shall be performed by the Contractor."

12. CONSTRUCTION SEQUENCE:

No main will be considered substantially complete until the trenching, pipe laying, bedding, backfill, compaction and clean up are complete. In addition the main must be pressure/leakage tested and disinfected, flushed and services transferred. Service transfers, if any, are to be undertaken as soon as the main is accepted, and are to be completed before another main is started, unless multiple crews are working on the project simultaneously. Construction may not begin on subsequent mains until work on the first main is considered complete. If multiple crews are working on the project the pipe laying crews may not work more than one main ahead of the crews conducting service transfers. Where a main is constructed in established lawns, clean up must be performed before the next main is begun. (Lawn areas must be ready to accept sod.)

13. SETTING FIRE HYDRANTS:

Setting of the fire hydrants shall be in strict conformance with Section 02645 Hydrants, Blowoff and Flushing Assemblies of the Standards and Specifications, with the following;

All new hydrant settings shall be as shown on the Plans and shall include all necessary excavation and backfill to make the installation complete. The area around each hydrant and hydrant valve cover shall be thoroughly compacted to prevent settlement of these areas.

The Contractor will locate the installation point of each hydrant as shown on the Plans. The Contractor shall furnish all labor and material necessary in laying out the Work. The Contractor shall be responsible for setting any offset stakes he may require. The Engineer shall approve the staked location of each hydrant before its installation.

14. STREAM CROSSINGS:

Stream and drainage ditch crossings shall be in strict confomance with the applicable Standards and Specifications and details shown on the Plans.

The trench width shall be as required for proper pipe installation and the trench depth shall be as required to give minimum cover shown on the Plans. Pipe encasement,

where required, shall be in accordance with the Standards and Specifications and placed as indicated on the Plans.

The construction of riprap for erosion prevention of ditch slopes will be required at locations shown on the Plans.

The rock used for riprap shall be hard durable stone, not less than fifteen (15) inches thick, and shall be placed in mortar to provide a neat, uniform surface.

The Contractor shall furnish all labor, equipment, and materials, and perform all work necessary to construct water main stream crossings as required. No extra payment will be allowed for shoring, forming, dewatering, trenching, backfilling, rip-rap, concrete or steel, or any other items necessary to complete stream or ditch crossings.

15. PAYMENT:

Payment will be as shown on the bid schedule.

End of Section.

SECTION 02675
WATER MAIN TESTING, DISINFECTION AND DECHLORINATION
PART 1 GENERAL
1.1 Section Description
A. This section provides for the required procedure for the water main testing, disinfection, and dechlorination prior to placing in service.
1.2 Section Includes
A. Corporation Cocks
B. Hydrostatic Testing
C. Disinfection of Water Mains
1.3 Related Sections
A. Section 01000 – General Requirements
B. Section 01300 – Submittals
C. Section 01600 – Material and Equipment
D. Section 02618 – Ductile Iron Pipe
E. Section 02619 – Prestressed Concrete Cylinder Pipe
F. Section 02641 – Valves
G. Section 02645 – Hydrants, Blowoff and Flushing Assemblies
1.4 References
A. AWWA C651 - Standards for Disinfecting Water Mains.
1.5 Submittals
A. Follow the procedures for submittals provided in Section 01300 – Submittals.
B. Certificate: The Contractor shall certify in writing that cleanliness of water distribution system meets or exceeds specified requirements.

C. At the completion of the disinfection procedures, Contractor shall prepare a Disinfection Report; including:

1.Type and form of disinfectant used.

2.Date and time of disinfectant injection start and time of completion.

3.Test locations.

4.Initial and 24 hour disinfectant residuals (quantity in treated water) in parts per million for each outlet tested.

5.Date and time of post disinfectant flushing start and completion.

6.Disinfectant residual after flushing in parts per million for each outlet tested.

C. Contractor shall arrange for water sample collection and testing by a MoDNR approved laboratory which shall prepare a Bacteriological Report; including:

1.Date issued, project name, and testing laboratory name, address, and telephone number.

2.Time and date of water sample collection.

3.Name of person collecting samples.

4.Test locations.

5.Initial and 24 hour disinfectant residuals in parts per million for each outlet tested.

6.Coliform bacteria test results for each outlet tested.

7.Certification that water conforms, or fails to conform, to bacterial standards of the Missouri Department of Natural Resources.

8.Bacteriologist's signature and authority.

1.6 Quality Assurance

A. Work shall be performed in accordance with AWWA C651.

PART 2 PRODUCTS

2.1 Corporation Cocks

A. The Contractor will furnish and install a three-fourth 3/4" inch Corporation cock to be used in the testing and disinfection of each new main. The location of these corporation cocks shall be as directed by the WSD.

B. After the line has been tested and prior to placing the main in service, the Contractor shall remove the corporation cock and replace it with a tapered brass plug.

PART 3 EXECUTION

3.1 Hydrostatic Testing

A. General

1.The entire main shall be tested (pressure test and allowable leakage test) immediately after construction as directed and witnessed by the WSD.

2.With approval of the WSD, the pressure test and leakage test may be conducted simultaneously. However, should the Contractor be granted permission to make both tests simultaneously, the required test pressure shall be equal to or greater than that for pressure tests as specified below.

B. Pressure Test

1.After the trench has been backfilled, the test connections made and the main filled with water, a minimum pressure of not less than the normal operating pressure (for the lowest point on the line) plus 50% for surge but in no case less than 150 psi, unless otherwise stated, shall be maintained on the new water main for at least two (2) hours.

2.The Contractor shall furnish all pumps, piping, gauges, labor and other materials and services necessary to bring the main up to the specified test pressure.

3.All exposed pipe, fittings, valves, hydrants and joints shall be inspected by the WSD and all evidence of moisture appearing on the surface of the ground during the test shall be investigated by the Contractor by excavation where the pipe has been covered with backfill.

4.All defective pipe, fittings, valves or hydrants discovered during the pressure test shall be removed and replaced by the Contractor and the pressure test shall be repeated until satisfactory to the WSD.

5.The Contractor shall furnish and install all temporary blow-off assemblies, fittings, thrust blocks, and restraining devices required for temporary connections for flushing, pressure testing, chlorination, and dechlorination of water mains.

C. Leakage Test

1.An allowable leakage test shall be conducted after the pressure test has been satisfactorily completed. The Contractor shall maintain a minimum pressure in the new water main of 150 psi (or a minimum of 10 psi greater than the normal operating pressure of the system) for the lowest point on the line for at least two (2) hours.

2.Leakage shall be defined as the quantity of water that must be supplied into the newly laid pipe to maintain the specified leakage test pressure after the air has been expelled and the pipe has been filled with water.

3.No water main, or section thereof will be accepted if and while it has a leakage rate in excess of that determined by the following formula:
$L = .00007\ ND/P$
Where:
L = Maximum permissible leakage in gallons per hour.
N = Number of pipe joints in the line under test.
(in counting the number of pipe joints for pressure and leakage testing, each coupling shall be considered as one (1) joint.)
D = Nominal internal diameter of the water main being tested in inches.
P = Average test pressure in psi in the water main being tested.

4.Should the actual leakage exceed the allowable leakage, the test pressure shall be maintained for an additional period of time as directed by the WSD so that the leakage location may be detected.

3.2 Disinfection of Water Mains

A. General

1. After completion of hydrostatic testing the Contractor shall flush and

disinfect the entire main under the direction of WSD.

2. The Contractor shall prepare the main for disinfection by exposing the pipe at all entry points where the chlorine will be introduced into the pipe and installing temporary blow-offs at all discharge ends.

3. Continuous feed method of chlorination is required. The slug method of chlorination may be used only when directed by WSD.

B. Continuous Feed-Method

1. Water supplied from an approved source of supply shall be made to flow at a constant, measured rate into the new water main.

2. At a point not more than 10 ft downstream from the beginning of the new main, water entering the new main shall receive a dose of chlorine fed at a constant rate such that the water will have not less than 25 mg/L free chlorine. To ensure that this concentration is achieved, the chlorine concentration should be measured at regular intervals.

3. As an optional procedure, water used to fill the new water main during the application of chlorine shall be supplied through a temporary connection. This temporary connection shall be installed with an appropriate cross-connection control device for backflow protection of the active distribution system. Chlorine application shall not cease until the entire main is filled with heavily chlorinated water. The chlorinated water shall be retained in the main for at least 24 hours, during which time all valves and hydrants shall be operated to ensure disinfection of the appurtenances. At the end of this 24-hour period, the treated water in all portions of the main shall have a residual of at least 10 mg/L free chlorine.

4. The preferred equipment for applying liquid chlorine is a solution-feed, vacuum-operated chlorinator and a booster pump. The vacuumoperated chlorinator mixes the chlorine gas in solution water; the booster pump injects the chlorine-gas solution into the main to be disinfected. All connections shall be checked for tightness before the solution is applied to the main.

5. After the required retention period (24 hours), the heavily chlorinated water shall be flushed from the pipeline until chlorine measurements show that the water leaving the pipeline is no higher than that generally prevailing in the system or is acceptable for domestic use. A reducing agent shall be applied to the water before discharging, to neutralize thoroughly the chlorine residual remaining in the water.

6. Contractor shall co-ordinate disinfectant testing and bacteriological testing to demonstrate that the above requirements have been met.

C. Slug Method

1. Water supplied from an approved source of supply shall be made to flow at a constant, measured rate into the new water main.

2. At a point not more than 10 ft downstream from the beginning of the new main, water entering the new main shall receive a dose of chlorine fed at a constant rate such that the water will have not less than 100 mg/L free chlorine. To ensure that this concentration is achieved, the chlorine concentration should be measured at regular intervals.

3. The chlorine shall be applied continuously and for a sufficient period to develop a solid column, or “slug” of chlorinated water that will, as it moves through the main, expose all interior surfaces to a concentration of approximately 100 mg/L for at least 3 hours

4. If at any time chlorine residual drops below 50 mg/L, the flow shall be stopped. Then the chlorination equipment shall be relocated at the head of the slug, and, as flow is resumed, chlorine shall be applied to restore the free chlorine in the slug to not less than 100 mg/L.

5. After the required retention period (at least 3 hours), the heavily chlorinated water shall be flushed from the pipeline until chlorine measurements show that the water leaving the pipeline is no higher than that generally prevailing in the system or is acceptable for domestic use. A reducing agent shall be applied to the water before discharging, to neutralize thoroughly the chlorine residual remaining in the water.

6. Contractor shall co-ordinate disinfectant testing and bacteriological testing to demonstrate that the above requirements have been met.
END OF SECTION

SECTION 02702 - SEWER PIPE AND MANHOLE TESTING

1. SCOPE. This section covers testing of all sewer pipes and manholes. Sewer pipe materials, installation, pipe trenching, bedding, and backfilling are specified in other sections.

2. SEWER PIPE ALIGNMENT AND GRADE TESTING. Alignment, grade and visible defects shall be checked as follows:

Visual Internal Inspection: Contractor shall clean and flush the pipe of excess mortar, joint sealant and other dirt and debris prior to inspection with clear water. Sewer will be inspected by flashing a light between manholes and/or by physical passage to determine the presence of any misaligned, displaced, or broken pipe and other defects.

3. SEWER PIPE INFILTRATION - EXFILTRATION TESTING. Hydrostatic or air pressure tests shall be conducted on sewers before acceptance by the Owner. The infiltration exfiltration shall not exceed (50) gallons per day per inch of nominal diameter per mile of sewer line for any section of the system.

A. Infiltration: Where sewers are laid within the ground water table, infiltration testing shall be conducted. Where evidence of infiltration is discovered by the Engineer, the Contractor shall install weirs or other suitable flow rate measuring devices adequate to determine to the satisfaction of the Engineer that the specified infiltration limit is not exceeded for that reach of gravity sewer. Where the specified infiltration limit is exceeded, the Contractor shall repair or replace the defective reach of pipeline at no additional cost to the owner. Following repair of the pipeline, the Contractor shall re-measure infiltration flow rates and make additional repairs until an acceptable infiltration flow rate is achieved.

B. Exfiltration: Exfiltration tests shall be performed by the Contractor using one or a combination of methods as set forth below. The required air pressure and/or exfiltration testing shall be successfully performed on carrier conduits prior to filling the void between the casing and the carrier conduits with sand or the sealing of the ends of the casing conduits.

1. Hydrostatic Tests for Gravity Systems:

a. Test section shall be filled not less than twelve (12) hours prior to testing. Refill test section prior to performing test.

b. Perform at depths of water as measured above center line of pipe of not less than 4 feet or more than 10 feet (consideration shall be given for water table above said centerline). Maintain test as necessary to locate all leaks but not less than two hours.

2. Hydrostatic Tests for Pressure Systems:

a. Conformance Procedure: Perform hydrostatic pressure and leakage tests. Conform to AWWA C 600 procedures as modified herein. Tests shall apply to all pressure sewers.

b. Sectionalizing: Test in segments between sectionalizing valves, between a sectionalizing valve and a test plug, or between test plugs. Contractor shall furnish and install test plugs at no additional cost to the Owner, including all anchors, braces, and other devices to withstand hydrostatic pressure on plugs. Contractor shall be responsible for any damage to public or private property caused by failure of plugs. Limit fill rate of line to available venting capacity.

c. Pressure Test: Conduct at 1.5 times maximum operating pressure determined by the following formula, but not less than 100 psi :

Ppt = (1.5) (.433) (OP-GE), in which

Ppt = test pressure in psi at gauge elevation

OP = operating pressure in feet as indicated for highest elevation of the hydraulic gradient on each section of the line.

GE = elevation in feet at center line of gauge.

Perform pressure tests satisfactorily prior to determining leakage.

d. Leakage Test: Conduct at maximum operating pressure as determined by the following formula:

Pit = 0.433 (OP-GE), in which

Pit = test pressure in psi at gauge elevation

OP and GE - as defined above
All joints shall be watertight and free from leaks.

3. Air Testing of Gravity Systems:

a. Each section of gravity pipeline between manholes and/or structures after backfill shall be tested as outlined below.

b. Contractor shall furnish all facilities required including necessary piping connection, test pumping equipment, pressure gauges, bulkheads, regulator to avoid over pressurization, and all miscellaneous items required.

c. The pipe plug for introducing air to the sewer line shall be equipped with two taps. One tap will be used to introduce air into the line being tested through suitable valves and fittings, so that the input air may be regulated. The second tap will be fitted with valves and fittings to accept a pressure test gauge indicating internal pressure in the sewer pipe. Additional valve and fitting will be incorporated on the tap used to check internal pressure so that a second test gauge may be attached to the internal pressure tap. The pressure test gauge valve may also be used to indicate loss of air pressure due to leaks in the sewer line.

d. The pressure test gauge shall meet the following minimum specifications:

Size (diameter)	4-1/2 inches
Pressure Range	0-15 psi
Figure Intervals	1 psi increments
Minor Subdivisions	0.05 psi
Pressure Tube	Bourdon Tube or diaphragm.
Accuracy	+/-0.25% of maximum scale reading.
Dial	White coated aluminum with black lettering, 270degree arc and mirror edge.
Pipe Connection	Low male 1/2 inch N.P.T.

Calibration data will be supplied with all pressure test gauges. Certification of pressure test gauge will be required from the gauge manufacturer. This certification and calibration data will be available to the Engineer whenever air tests are performed.

e. Plug ends of line and cap or plug all connections to withstand internal pressure. One of the plugs provided must have two taps for connecting equipment. After connecting air control equipment to the air hose, monitor air pressure so that internal pressure does not exceed 5.0 psig. After reaching 4.0 psig, throttle the air supply to maintain between 4.0 and 3.5 psig for at least two (2) minutes in order to allow equilibrium between air temperature and pipe walls. During this time, check all plugs to detect any leakage. If plugs are found to leak, bleed off air, tighten plugs, and again begin supplying air. After temperature has stabilized, the pressure is allowed to decrease to 3.5 psig. At 3.5 psig, begin timing to determine the time required for pressure to drop to 2.5 psig. If the time, in seconds, for the air pressure to decrease from 3.5 psig to 2.5 psig is greater than that shown in the table below, the pipe shall be presumed free of defects.

Pipe Diameter (in)	Minimum Time (min:sec)	Length for Minimum Time (ft)	Time for Longer Length (sec) L = Total Length
4	3:46	597	.380 L
6	5:40	398	.854 L
8	7:34	298	1.520 L
10	9:26	239	2.374 L
12	11:20	199	3.418 L
15	14:10	159	5.342 L
18	17:00	133	7.692 L
21	19:50	114	10.470 L
24	22:40	99	13.674 L
27	25:30	88	17.306 L
30	28:20	80	21.366 L
33	31:10	72	25.852 L
36	34:00	66	30.768 L
42	39:48	57	41.883 L
48	45:34	50	54.705 L

If air test fails to meet above requirements, repeat test as necessary after all leaks and defects have been repaired and backfilled. Before the manhole vacuum test is performed and in areas where ground water is known to exist, install a one-half inch diameter capped pipe nipple, approximately 10" long, through manhole wall above one of the sewer lines entering the manhole. This shall be done at the time the sewer is installed. Immediately prior to the performance of the line acceptance test, ground water level shall be determined by removing pipe cap, blowing air through pipe nipple into the ground so as to clear it, and then connecting a clear plastic tube to pipe nipple. The hose shall be held vertically and a measurement of height in feet of water shall be taken after the water stops rising in this plastic tube. The height in feet shall be divided by 2.3 to establish the pounds of pressure that will be added to all readings. If the air pressure required for the test is greater than 9 psig, the air test method will not be allowed. Instead, an infiltration test shall perform by Contractor.

(In lieu of the above paragraph, the Contractor may install a monitoring well to measure the height of the ground water prior to air testing. The monitoring well shall be sized to allow measurement of the ground water from the surface and extend into the granular pipe bedding. The monitoring well shall be removed in a manner acceptable to the Owner.)

g. If Polyvinyl Chloride (PVC) gravity sewer pipe is used it shall be air-tested in

accordance with the requirements of ASTM F-1417.

4. SEWER PIPE DEFLECTION TESTING. After backfill has been in place 30 days, and prior to acceptance of the Work each reach of flexible pipelines shall be tested for excessive deflection by pulling a mandrel through the entire length thereof, or by other methods acceptable to the Engineer.

A. The mandrel (go/no-go) device shall be cylindrical in shape and constructed with nine (9) evenly spaced arms or prongs. Mandrels with fewer arms will be rejected as not sufficiently accurate. The dimensions of the mandrel shall be as listed in the accompanying table. The "D" mandrel dimension shall carry a tolerance of + or - 0.01 inch. Allowances for pipe wall thickness tolerances or ovality (from heat, shipping, poor production, etc.) shall not be deducted from the "D" dimension but shall be counted in as a part of the five (5) percent or lesser deflection allowance. Contact length (L) shall be measured between points of contact on the mandrel arm. The length shall not be less than as shown in the accompanying table.

Nominal Diameter (Inches)	Mandrel Length (inches)	Mandrel Diameter (inches)
8	12	7.6
10	12	9.50
12	12	11.40
15	12	14.25
18	15	17.10
21	16	19.67
24	18	22.13
27	21	24.94
30	24	28.03
36	27	33.73
42	33	39.54
48	39	45.26

B. The Contractor shall be responsible for approving the mandrel. Proving rings shall be used to verify this.

C. The mandrel shall be hand-pulled by the Contractor through all flexible sewer lines. Any sections of sewer not passing the mandrel test shall be uncovered and the Contractor, at no additional cost to the Owner, shall reround or replace the sewer to the satisfaction of the Engineer. These repaired sections shall be re-tested.

D. The testing shall be conducted thirty days after final trench backfill. At the Contractor's option, the section(s) of sewer may be tested after backfill is completed, but will be required to retest after thirty (30) days.

5. MANHOLE TESTING.

A. General: All manholes and other structures shall be tested for infiltration/exfiltration by one of the two methods described herein. Infiltration/exfiltration testing shall be performed in the presence of the Owner. Neither infiltration nor exfiltration shall exceed 1.14 gallons per foot depth per day. Notification by the Contractor to the Owner shall be. All visible leaks shall be repaired by the Contractor prior to testing and during the warranty period.

B. Infiltration/Exfiltration Testing: Testing shall be performed using either of the following two methods for new and rehabilitated manholes. For existing manholes, (if not fully rehabilitated) only Method 1 shall be used. All lift holes shall be plugged with an approved non-shrink grout prior to testing. All pipes entering the manhole shall be plugged. For Method 2, the plug shall be braced securely to prevent the plug from being drawn into the manhole.

Method 1: The manhole or other structure shall be backfilled prior to testing. The manhole or structure shall be filled to its full depth with water, though water depth shall not exceed 25 feet. Manholes exceeding 25 feet in total depth shall require additional infiltration/exfiltration testing of the upper portion of the manhole as outlined in Method 1A. At least two hours shall be allowed for absorption to take place prior to the start of measurement. Measurement of leakage shall be by measuring the water required to maintain a constant level in the manhole. Measurement shall take place over a 24-hour period unless otherwise directed by the Owner for existing manholes where service must be restored. If the manhole fails the initial test, repair shall be by pressure grouting or rebuilding the manhole. The grout shall be urethane gel, hydrophilic polymer, Scotch-Seal 5610 or equivalent with reinforcing agent supplied by the same manufacturer, Scotch Seal 5612 or equivalent. When wet, the gel shall exhibit at least 25 psi tensile strength at 150 percent elongation. The material shall not change more than eight percent in linear dimensions when subjected to cycles of wetting and drying. All materials shall be handled, mixed, and applied in accordance with the manufacturers recommendations. Holes shall be drilled through the manhole wall to the exterior of the manhole through which the grout shall be injected using suitable probes. Grouting from the ground surface will not be allowed. The grouting pressure shall not damage the manhole, structure, or surrounding ground.. Grout holes shall be drill-cleaned and sealed with non-shrink grout. After the grout has cured in accordance with the manufacturers recommendations, the manhole shall be re-tested. Re-testing and re-grouting shall be performed until the manhole passes the test.

Method 1A: The upper portion of manholes exceeding 25 feet in total depth shall be dye water tested in the presence of the Engineer. The dye water testing shall consist of injecting or flooding a concentrated dye solution just outside the manhole frame. The dyed water shall continue to be applied for a minimum of ten (10) minutes after saturation, as evidenced

by surface ponding. The manhole will be observed for a minimum period of five (5) minutes after dye water application. Manholes observed to be actively leaking, greater than 1.14 gallons per day per vertical foot, will not be accepted. Manholes failing the test shall be repaired by pressure grouting as specified above or re-assembly of the manhole and re-tested by the Contractor.

Method 2: The Contractor shall visually verify the absence of leaks and perform a vacuum test, on manholes that have inlet and outlet pipes of less than 42 inches in diameter, as follows:

All pipes entering the manhole shall be plugged at least eight (8) inches into the sewer pipe. The plug must be inflated at a location beyond the manhole/pipe gasket.

All plugs shall be adequately braced to prevent the plug or pipe from being dislodged and drawn into the manhole.

A vacuum of at least 10-1/2 inches of mercury shall be drawn on the manhole. The valve on the vacuum line to the manhole shall be shut and the vacuum line disconnected. The vacuum line valve shall be opened and the vacuum adjusted to 10 inches of mercury.

The pressure gauge shall be liquid filled having a 3.5 inch diameter face with a reading from zero to 30 inches of mercury. The test equipment shall be capable of having two gauges connected. The gauge supplied with the test equipment shall match the reading of a gauge furnished by the Owner.

The time for the vacuum reading to drop from 10 inches of mercury to 9 inches of mercury shall not be less than the following values for the manhole to be considered as passing the vacuum test:

Manhole Depth	**Time in Minutes**
10 feet or less	2
10.1 to 15 feet	2.5
15.1 to 25 feet	3

If a manhole fails the vacuum test, the leak shall be repaired by patching the interior of the manhole. The manhole shall then be re-tested.

The vacuum testing times in the above table will be reduced by one-half for manholes with total rehabilitation which do not have new or rehabilitated pipes entering and exiting the structure.

6. Payment for this item shall be covered under the bid item “Manholes”.

02710 ROCK ANCHORS

A. GENERAL: This item shall cover the fabrication, handling, installation, grouting and testing of the bonded rock anchors necessary to construct Dam 3 only, under this contract as shown on the contract drawings. This specification does NOT apply to Dam 1, Dam 2, channel anchors, nor wall anchors.

B. REFERENCED STANDARDS

ASTM A 36/A 36M	(2000) Carbon Structural Steel
ASTM A 490	(1998) Heat treated Steel Structural Bolts
ASTM A 536	(1984; R 1999e1) Ductile Iron Castings
ASTM A 722/A 722M	(1998) Uncoated High-Strength Steel Bar for Prestressing Concrete
ASTM A 775/A 775M	(2000) Epoxy-Coated Reinforcing Steel Bars
ASTM C 845	(1996) Expansive Hydraulic Cement
ASTM D 1248	(2000) Polyethylene Plastics Molding and Extrusion Materials
ASTM D 3350	(1999) Polyethylene Plastics Pipe and Fittings Materials

POST-TENSIONING INSTITUTE (PTI)

PTI Spec	(Dec 2000, Second Edition) Specification for Unbonded Single Strand Tendons
PTI Rec	(June 1996, Third Edition) Recommendations for Prestressed Rock and Soil Anchors
PTI Post Ten Man	(Nov 1990, Fifth Edition) Post Tensioning Manual

C. SUBMITTALS:

Installation Plan

The Contractor shall submit to the Contracting Officer for review and comment a plan for installing the rock anchors, SD07-GA-RE; SD01-GA-RE. The proposal shall describe the sequence for installation and other restrictions as outlined on the drawings or specified. The installation plan shall include descriptions of methods and equipment to be used by the Contractor for alignment checking of anchor holes.

Anchors

The contractor shall submit shop drawings for the approval by the Contracting Officer, SD04-GA-RE. Shop drawings for anchors shall include locations and details of the spacers, centralizers, and banding. Once reviewed by the Contracting Officer, no changes or deviation from shop drawings shall be permitted without further review by the Contracting Officer.

Grout

The Contractor shall submit the grout manufacturer's certification that the internal grout during production was tested in accordance with ASTM C 845-96, SD13-FIO-RE. A report of the test results and grout mix properties shall be furnished at the time of shipment.

Thirty days prior to installation of anchors, the Contactor shall submit the external grout mixture proportions that will produce grout of the quality required. Applicable test reports shall be submitted to verify that the grout mixture proportions selected will produce grout of the quality specified. Lab test shall verify that all requirements of ASTM C-845 are met.

Steel

The Contractor shall furnish five copies of mill reports and five copies of a certificate from the manufacturer stating chemical properties, ultimate strengths, yield strengths, modulus of elasticity for the type of steel furnished, SD13-FIO-RE.

Epoxy-Coated Steel Bars

Written certification for coating material and coated bars shall be submitted with the delivery of the bars, SD13-FIO-RE.

D. MATERIALS: The anchoring system shall be furnished complete with all anchor accessories and shall be a standard product of Williams Form Engineering Corporation, 280 Ann St., N.W., Grand Rapids, MI 49504, model MCP III or approved equal. The anchors shall conform to all requirements set forth below:

1 Epoxy-Coated High-Strength Steel Bars

ASTM A 722/A 722M, Type [II], conforming to the coating requirements of ASTM A 775/A 775M, 8 mils minimum thickness. Coating at the anchorage end may be omitted over the length provided for threading the nuts against the anchorage plate.

2 Smooth Sleeve Polyethylene Tubing

ASTM D 1248, Type III, 2.5-inch nominal diameter, class 200

3 Polyethylene Corrugated Tubing

ASTM D-3350, with average minimum wall thickness of 0.06 inch.

4 Polyethylene Corrugated End Cap

ASTM D-3350

5 Anchor Head Assembly

Anchor head assembly shall consist of a steel anchor head plate secured by 2 nuts per rock anchor.

ASTM A 36/A 36M, Anchor Head Plate

ASTM A490/A490M, Type 3, Nuts

6 Centralizers

Centralizers shall be fabricated from plastic, steel or other material, that is nondetrimental to the steel bars. Wood shall not be used. The centralizer shall be able

to support the tendon in the drill hole and position the tendon grout cover is provided. Centralizers shall permit grout to freely flow up the drill hole.

7 Cement Grout (internal and external):

Cement Grout shall be for use both in the external bond zone and internally in the free stressing or bond zone sleeves shall be an expansive hydraulic cement (K) which is chemically compensated for shrinkage, has a high bond and compressive strength value and is crack resistant for permanent anchor installations. It shall be mixed with potable water only (without sand or other additives) which is clear, free of oil, acid, alkali, organic matter, or injurious quantities of chlorides, fluorides, sulfites and nitrates which may be harmful to Portland cement and steel. The grout shall conform to ASTM C-845 Type E-1, including optional limit on alkalies.

The water-cement ratio of the grout shall be between 0.40 and 0.45 by weight. Grout shall be thoroughly mixed and shall be pumped into the hole. Placement methods shall ensure that the entire annular space surrounding each anchor is completely filled.

Grout for anchoring the rock anchor shall attain a minimum compressive strength of 3,000 psi before testing.

E. INSTALLATION:

Holes for installation of rock anchors shall be drilled at the locations and have lengths, diameters, and orientations as indicated on the contract drawings. Holes are to be over drilled at least 1'0" in length.

Drilling equipment shall be subject to the approval of the Contraction Officer. The holes shall be drilled using properly sharpened bits operated in such a manner as to produce straight holes. Unacceptable holes shall be completely filled with fast setting grout.

All drill holes shall be blown clean with compressed air at a minimum pressure of 25 PSI introduced at the bottom of the hole upon completion of drilling and again immediately before installation of anchors. The length of each drill hole shall be checked to ensure the anchor will have the required embedment and will project the required length from the surface.

Anchors shall be cleaned of all loose materials prior to installation in the hole. All threads shall be free of rust and burrs, and nuts shall be free running on the threads of the bar. A thread lubricant shall be applied over the entire exposed external thread and contact surfaces.

Centralizers shall be installed at approximately 10'0" o.c. within the bonded length on the anchor. Grout tubes shall be fastened along the length of bolt.

During installation, bars should not be unduly forced or impacted into holes which might cause even temporary bends to occur anywhere along the length of the bolts resulting in cracked internal grout or which could cause abrasive damage to sleeves or coating or to the exposed threaded section.

F. Anchor Testing:

A performance test will be performed on three anchors and shall be load tested to 97 kips. The contracting officer shall select the three anchors.

Load shall be applied using a center pull jack. The jack shall have been calibrated within 60 days prior to the work. The load shall be applied using a suitable load frame.

An alignment load of 10% of the test load shall be applied, the dial gauge read, recorded and then the load shall be increased slowly and uniformly, using the standard load increments for performance testing as defined in Section 4.3.7.1 of the Post Tensioning Institute's (PTI) Post Tensioning Manual to the required test load. Loaded Anchors, which show a displacement of more than .73 in or fails to test load, shall be replaced as directed.

Any anchor that fails or is rejected by the Contracting Officer shall be replaced. A replacement anchor, including a new anchor hole, shall be provided by the Contractor at no expense to the Government. The location of the replacement anchor shall be as directed by the Contracting Officer. The Contractor shall provide all materials, supplies, equipment, and labor necessary to provide a new anchor assembly to the satisfaction of the Contracting Officer. The contractor shall either remove the failed anchor and thoroughly ream and clear the anchor hole or cut the anchor and casing flush. For every failed anchor, and addition performance test shall be made.

E. PAYMENT:

Payment will be made for costs associated with Dam no. 3 to include furnishing and installing anchors, complete, which are accepted. The price shall include installation of anchors and proof testing as specified. No payment will be made for anchors which do not meet the acceptance criteria.

Item	Unit

“Dam No. 3”	Lump Sum

* * * * * * * * * * *

02715 ANCHORS AND DRAINS

A. GENERAL: This section pertains to:

1. Rock Anchors.
2. Anchored Wall Drains.
3. Retaining Wall Drains.
4. Slope Paving Drains.
5. Channel Paving Drains.
6. Dam Anchor*

*This section does NOT pertain to Anchor for Dam 3. See Specification 02710 ROCK ANCHOR for Dam 3 Anchors

B. REFERENCES:

1. ASTM A 706
2. ASTM D 4435-84

C. SUBMITTALS:

1. Shop Drawings: The Contractor shall submit shop drawings which include the following; reinforcement steel placement drawings; reinforcement steel schedules showing quantity, size, shape, dimensions, weight per foot, total weights and bending details; and details of bar supports showing types, sizes, spacing and sequence, SD04-GA-EC.

2. Test Reports: Certified tests reports of reinforcement steel showing that the steel complies with the applicable specifications shall be furnished for each anchor shipment and identified with specific lots prior to placement. Three copies of the heat analyses shall be provided for each lot of steel furnished and the Contractor shall certify that the steel conforms to the heat analyses, SD09-GA-EC.

3. Grout: The Contractor shall submit the grout manufacturer's certification that the internal grout during production was tested in accordance with ASTM C 845-96, SD13-FIO-RE. A report of the test results and grout mix properties shall be furnished at the time of shipment.

Thirty days prior to installation of anchors, the Contactor shall submit the external grout mixture proportions that will produce grout of the quality required. Applicable test reports shall be submitted to verify that the grout mixture proportions selected will produce grout of the quality specified. Lab test shall verify that all requirements of ASTM C-845 are met.

D. ANCHORS:

1. General:

(a) Anchors shall be groutable rebar type. The configuration and placement shall be as shown on the drawings and as described further in this section. All rust shall be removed. Splicing will not be permitted. Rotary percussion methods shall be used to drill all anchor holes. Anchor holes for #'s 5, 6, 9, and 10 shall be 3” in diameter. Anchors shall not be located in trench fill material. All anchor holes shall be over drilled by 1-foot in length

(b) Anchors shall be classified as wall anchors, paving anchors or dam anchors.

2. Anchor Embedment:

(a) Wall Anchors:

Wall anchors shall meet the requirements of ASTM A 706, deformed, and be grade 60,000 psi and of the sizes and lengths shown on the drawings. All wall anchors regardless of diameter, shall be embedded into rock to a depth of ten (10) feet. Holes for wall anchors shall be drilled 20 degrees down from the horizontal and oriented normal to the walls in the vertical plane.

(b) Paving Anchors:

Paving anchors shall meet the requirements of section 03210. Embedment of paving anchors shall be as follows:

a) #9 - 12'
b) #5 - 4'

(c) Dam Anchors:

Dam anchors shall meet the requirements of ASTM A 706, deformed, and be grade 60,000 psi and of the sizes and lengths shown on the drawings. All dam anchors shall be embedded into rock to a depth of twelve (12) feet. Holes for wall anchors shall be drilled 26.5 degrees down from the vertical and inserted in the upstream direction as shown on contract drawings.

3. Grout:

(a) Grout for anchors in this specification shall be mixed as follows:

Parts by weight Portland type III cement/water	1:0.44
Expansion additive: Percent by weight of cement - (Intraplast N, SIKA Chemical Corp., or equivalent)	0.25
Accelerator: Ounces per cwt cement, - (Masterbuilders 555A, or equivalent)	20

(b) Grout shall be mixed in a grout plant capable of mixing and pumping grout. Hand mixing will not be permitted. Mixing and placement shall be coordinated so that delays do not permit the mixture to set or change consistency. Grouts which set or change shall be discarded.

4. Installation:

(a) Grout holes shall be cleaned of all drill cuttings, water, and any other material by the use of compressed air at 50 PSI from the bottom of the hole just prior to the placement of grout. Grout shall be placed in the hole from the bottom and shall completely fill the hole prior to emplacement of the anchor. Anchors shall be centered in the hole by use of copper wire of a gauge which will keep the anchor from coming into contact with the sides of the hole.

(b) Anchors shall be emplaced a minimum of 48 hours prior to placing the concrete walls. Anchors which are loose shall be replaced at no expense to the City.

5. Testing: Anchor pull tests shall be performed randomly on 2.5% of the anchored wall anchors installed. The testing apparatus shall be of the type described in ASTM D 4435-84. Anchor test load (in pounds) shall be as follows:

	Maximum	Minimum
#6	24,600	23,600

Anchors which show a displacement of more than 0.1 inch shall be replaced as directed. Anchors designated for testing shall have been placed for a minimum of 72 hours before test loading. A record shall be maintained of anchors tested, including location, maximum test load, and displacement.

E. DRAINS:

1. Anchored Wall Drains: Anchored wall drains shall be placed midway between each vertical row of anchors, or between every other vertical row if anchor spacing is 5 feet or less. Drain spacing shall not exceed 10 feet. Drains shall be angled down 20 degrees from the horizontal and shall extend 10 feet into rock. Guide sleeves shall be incorporated into concrete forms at the proper angles to insure that drilling equipment does not cut reinforcing steel. Sleeves will be made of 4-inch schedule 80 PVC pipe and placed midway between the bottom of the wall and the top of the rock. The drains shall extend, by drilling, through the sleeve into the rock to the required depth. The Contractor may use rotary percussion or thin wall coring methods to extend the drains. The sleeves shall be cut and placed so that the end facing the channel is flush with the wall face. The extended drains shall be 3 inches in diameter. The Contractor shall insure that drilling operations does not destroy the sleeves. Drains will be located to avoid buried pipe and electrical conduits and trench fill material.

2. Channel Paving Drains: Channel paving drains shall be installed as shown in the drawings. Guide sleeves and drilling techniques shown in paragraph D.1 shall be used. Holes shall be drilled 30 degrees from the vertical in an upstream direction parallel to the stream centerline.

3. Retaining Wall and Slope Paving Drains. Drains in retaining walls other than anchored walls and in the slope paving shall be installed as shown on the drawings. The slotted pipe screens extending behind the walls and slope paving shall be PVC Schedule 80 configured with three rows of slots, spaced equally circumferentially (0.25 inch width, 1.75 inch slot length, and 0.25 inch spacing between slots). The 3-inch diameter screens shall expose slots in a 6-inch minimum length to provide a required 15 square inches of open area. An end cap shall be provided on the end of

the screen. The total extension length of the slotted pipe screen shall be no more than 10 inches behind the retaining wall, but shall be as shown on the drawings for the slope paving. The Contractor shall ensure that the slotted screens are not damaged during construction.

F. PAYMENT: No additional payment shall be made for Anchors and Drains. It shall be considered incidental to other contract bid items.

******

02720 PERFORATED PIPE

A. GENERAL:

1. General: Work performed under this section is related to perforated pipe for backfill drainage. Perforated pipe shall be furnished and installed as a complete system at the locations shown on the drawings.

2. References:

AMERICAN ASSOCIATION OF STATE HIGHWAY AND TRANSPORTATION OFFICIALS (AASHTO):

(a) AASHTO M 252 (1985) Corrugated Polyethylene Drainage Tubing

(b) AASHTO M 278 (1987I) Class PS 46 Polyvinyl Chloride (PVC) Pipe

AMERICAN SOCIETY FOR TESTING AND MATERIALS (ASTM):

(a) ASTM D 1784 (1981) Rigid Poly (Vinyl Chloride) (PVC) Compounds and Chlorinated Poly (Vinyl Chloride) (CPVC) Compounds

(b) ASTM D 2751 (1989) Acrylonitrile-Butadiene-Styrene (ABS) Sewer Pipe and Fittings

(c) ASTM D 3034 (1989) Type PSM Poly (Vinyl Chloride) (PVC) Sewer Pipe and Fittings

(d) ASTM D 3212 (1989) Joints for Drain and Sewer Plastic Pipes Using Flexible Elastomeric Seals

(e) ASTM F 405 (1989) Corrugated Polyethylene (PE) Tubing and Fittings

(f) ASTM F 758 (1982) Smooth-Wall Poly (Vinyl

Chloride) (PVC) Plastic Underdrain Systems for Highway, Airport, and Similar Drainage

(g) ASTM F 949 (1989) Poly (Vinyl Chloride) (PVC) Corrugated Sewer Pipe With a Smooth Interior and Fittings

3. Submittals: Certificates from the manufacturers, attesting that materials meet specification requirements and indicating the industry standard satisfied, shall be furnished for approval.

B. MATERIALS: Perforated pipe shall be of the type and size indicated. Appropriate transitions, adapters, or joint details must be used where pipes or other parts connect.

1. Exposure: Plastic pipe shall contain ultraviolet inhibitor to provide protection from exposure to direct sunlight.

2. For Corrugated Polyethylene (PE) Drainage pipe use ASTM F 405 heavy duty for pipe 3 to 6 inches in diameter inclusive, or use AASHTO M 252 for pipe 3 to 10 inches in diameter. Fittings shall be pipe manufacturer's standard type and shall conform to the indicated specification.

3. For Acrylonitrile-Butadiene-Styrene (ABS) Pipe, use ASTM D 2751, with a maximum SDR of 35.

4. For Polyvinyl Chloride (PVC) Pipe, use ASTM F 758, Type PS 46, ASTM D 3034, or ASTM F 949 with a minimum pipe stiffness of 46 psi.

5. Fittings: Fittings shall be of compatible materials for pipe, of corresponding weight and quality, and as specified herein.

6. Bedding and Pervious Backfill for Perforated Pipe: Bedding and pervious backfill adjacent to the pipe shall be coarse filter as specified in section: EARTHWORK (Channel).

C. DELIVERY, STORAGE AND HANDLING: Materials placed in storage shall be stored with protection from the weather, humidity and temperature variations, dirt and dust, or other contaminants. Pipe shall not be stored directly on the ground, or stored in direct sunlight. Plastic pipe shall not be installed more than 6 months from time of manufacture.

D. PERFORATIONS:

1. Circular Perforations: Circular holes shall be cleanly cut, and shall be 1/4 inch plus or minus 1/32 inch in diameter, and arranged in rows parallel to the longitudinal axis of the pipe. Perforations shall be approximately 3 inches apart, center-to-center, along rows. The rows shall be approximately 1-1/2 inches apart and arranged in a staggered pattern so that all perforations lie at the midpoint between perforations in adjacent rows. The rows shall be spaced over not more than 165 degrees of circumference. The spigot or tongue end of the pipe shall not be perforated for a length equal to the depth of the socket and perforations shall continue at uniform spacing over the entire length of the pipe. The water inlets shall be a minimum of 0.5 square inches per linear foot of pipe. Manufacturer's standard perforated pipe, which essentially meets these requirements, may be used with prior approval by the Engineer.

2. Slotted Perforations: Circumferential slots shall be cleanly cut so as not to restrict the inflow of water and uniformly spaced along the length and circumference of the tubing. Width of slots shall not exceed 1/4 inch or be less than 1/32 inch. the length of individual slots shall not exceed 10 percent of the pipe inside nominal circumference. Rows of slots shall be symmetrically spaced so that they are fully contained in quadrants of the pipe. Slots in corrugated pipe shall be centered in the valleys of the corrugations of profile wall pipe. The water inlet area shall be a minimum of 0.5 square inches per linear foot of pipe. Manufacturer's standard perforated approval of Engineer.

E. INSTALLATION.

1. General: Perforated pipe shall be furnished and installed as a complete system at the locations shown on the drawings.

2. Bedding: Coarse filter shall be placed to the limits as shown on the drawings, a minimum of 3 inches in depth, and compacted as specified prior to laying of perforated pipe. Each section of the pipe shall rest firmly upon the coarse filter, through the entire length, with recesses formed for bell joints. Except for recesses for bell joints, the bedding shall fully support the lower quadrant of the pipe.

3. Pipe Laying: Perforated pipe shall be laid to true grades and alignment shown

on the drawings. Bells of pipe sections shall face upgrade for horizontal placement. Interior of pipe shall be cleaned thoroughly before being laid. When drain lines are left open for connection to discharge lines, the open ends shall be temporarily closed and the location marked with wooden stakes. Perforated pipe shall be laid with perforations facing down. Any length that has had its grade or joints disturbed shall be removed and relaid. Perforated corrugated polyethylene drainage tubing and plastic piping shall be installed in accordance with manufacturer's specifications and as specified herein. Piping and fittings with physical imperfections shall not be installed.

4. Outlet Connections: The pipe shall outlet through the drop structure steps at the specified location, and shall extend fully through the steps to be flush with the step face. The portion of the pipe through the wall shall be unperforated, and shall be of the same material type as the perforated pipe.

5. Ends of pipe terminating in the backfill shall be capped.

F. JOINTING:

1. Perforated Pipes: Perforated types of drain pipes shall be laid with closed joints.

2. ABS Pipe: ABS pipe shall be joined using solvent cement or elastomeric joints and shall be in accordance with ASTM D 2751.

3. PVC Pipe: PVC pipe joints shall be in accordance with ASTM D 3034, ASTM D 3212, or ASTM F 949.

4. Corrugated Polyethylene: Corrugated Polyethylene (PE) pipe joints shall be in accordance with ASTM F 405 or ASTM F 667.

G. BACKFILLING: After joints and connections have been inspected and approved, coarse filter shall be brought up evenly around the pipe and compacted as specified. When placing the coarse filter, care shall be taken to prevent displacement of or injury to the pipe. Backfill shall be compacted as specified in section: EARTHWORK.

H. PAYMENT: Payment for Perforated Pipe shall be subsidiary to other bid items.

02820 TURF REINFORCEMENT MAT

A. GENERAL:

1. References: The publications listed below form a part of this specification to the extent referenced. The publications are referred to in the text by basic designation only.

AMERICAN SOCIETY OF TESTING AND MATERIALS (ASTM)

ASTM D 792-00	Standard Test Methods for Density and Specific Gravity (Relative Density) of Plastics by Displacement
ASTM D 1388-96	Standard Test Methods for Stiffness of Fabrics
ASTM D 1777-96	Standard Test Methods for Thickness of Textile Materials
ASTM D 4355-99	Standard Test Method for Deterioration of Geotextiles for Exposure to Ultraviolet Light and Water
ASTM D 5035-95	Standard Test Method for Breaking Force and Elongation of Textile Fabrics (Strip Method)
ASTM D 5199-01	Standard Test Method for Measuring Nominal Thickness of Geotextiles and Geomembranes

2. Submittals: The following shall be submitted:

A. Product Information Sheet(s) containing product description, dimensions, statement of intended or designed use of product, and product photographs, SD01-FIO-RE. The Contractor shall provide documentation from the manufacturer that each lot of turf reinforcement mat meets or exceeds the required specifications.

B. The Contractor shall submit samples of each type of fastener to be used with the turf reinforcement mat, SD14-FIO-RE.

3. Delivery, Storage, and Handling:

a. Delivery and Storage: Materials delivered to site shall be inspected for damage, unloaded, and stored with a minimum of handling. Materials shall not be stored directly on the ground. The Contractor shall have a copy of the manufacturer's instructions available at the construction site at all times and shall follow these instructions unless directed otherwise by the Contracting Officer.

b. Handling: Materials shall be handled in a manner that ensures delivery to the location of installation in sound, undamaged condition.

B. MATERIALS:

1. Turf Reinforcement Mat: The Contractor shall provide turf reinforcement mat which meets the following requirements:

The composite turf reinforcement mat shall be a machine-produced mat of 100% coconut fiber matrix incorporated into a permanent three-dimensional netting structure.

The matrix shall be stitch bonded between a heavy duty UV stabilized bottom net with 0.50 x 0.50 inch openings, a heavy duty UV stabilized, dramatically corrugated (crimped) intermediate netting with 0.50 x 0.50 inch openings, and a super heavy duty UV stabilized top net with 0.50 x 0.50 inch openings. The corrugated netting shall form prominent closely spaced ridges across the entire width of the mat. The three nettings shall be stitched together on 1.50 inch centers with UV stabilized polypropylene thread to form a permanent three-dimensional structure.

Installation staple patterns shall be clearly marked on the turf reinforcement mattings with environmentally safe paint. All mats shall be manufactured with a colored thread stitched along both outer edges (approximately 2 – 5 inches from the edge) as an overlap guide for adjacent mats.

The composite turf reinforcement mat shall be the North American Green C350, or approved equal. The permanent composite turf reinforcement mat shall have the following physical properties:

Material Content

Matrix	100% Coconut Fiber (0.50 lb/yd^2)

Nettings	Top - Heavy UV Stabilized Polypropylene 8.00 lbs/1,000 ft^2 Mid - Super heavy UV Stabilized Polypropylene 24 lb/1,000 ft^2 Bottom – Heavy UV Stabilized Polypropylene 8.00 lbs/1,000 ft^2 Thread UV Stabilized Polypropylene

Physical Specifications (per roll)

Width	6.50 ft
Length	55.5 ft
Weight	37.00 lbs ± 10%
Area	40 yd^2
Stitch Spacing	1.50 in

2. Staples/Fasteners: The Contractor shall provide staples, fasteners, pins, etc. per the manufacturer's recommendation.

C: INSTALLATION:

1. Turf Reinforcement Mat:

a. The Contractor shall install turf reinforcement mat as shown on the drawings. Turf reinforcement mat shall be installed in a directional manner as recommended by the manufacturer.

b. The Contractor shall assume a 20% scrap factor (overlap and burial loss) for turf reinforcement mat. Material will be trenched at the top of each bank, as shown on the Drawings, and shall be installed to match the final graded contour of the soil surface. The Contractor shall account for all scrap and trench-secured quantities in his/her quotation. Such quantities are considered incidental and non-payable for the project.

c. The Contractor shall fill turf reinforcement mat with on-site topsoil even with the top of the turf reinforcement mat. Seeding shall be performed as specified in Section: SEEDING.

2. Staples/Fasteners: Staples, fasteners, pins, and others shall be installed as per the recommendations of the manufacturer.

3. Field Quality Control: Notification: The Contractor shall notify the Contracting Officer 24 hours prior to installation of any portion of the work to allow the Contracting Officer sufficient time to inspect the work and shall obtain approval of all material prior to commencing construction. Any portion of the work installed without inspection may be removed to uncover sufficient portions of the work to allow inspection.

D. PAYMENT AND COVERAGE:

1. Turf Reinforcement Mat: Payment will be by the square foot and shall include the Turf Reinforcement Mat.

2. Blanket Fasteners and Staples: No additional payment shall be made for blanket fasteners, staples, or other connecting hardware. It shall be considered incidental to other contract bid items.

The following coverage shall be in Table 1:

Location (Baseline Station)	Elevation (M.S.L.) or Top of Bank (T.O.B.)
Left Bank, 13+10 to 14+20	770
Left Bank, 14+20 to 22+00	T.O.B.
Left Bank, 23+60 to 27+80	T.O.B.
Left Bank, 29+80 to 30+60	T.O.B.
Right Bank, 13+00 to 14+00	768 (at 13+00) to 765 (at 14+00)
Right Bank, 14+00 to 16+00	765
Right Bank, 19+50 to 21+80	762 (at 19+50) to 750 (at 22+00)
Right Bank, 23+50 to 27+80	T.O.B.
Right Bank, 29+80 to 30+40	T.O.B.

Turf Reinforcement Mat shall be placed along the final grade slopes to the elevations or to the top of bank shown in Table 1 in the areas not receiving Paved Slope Protection.

02923 TOPSOIL MATERIAL AND APPLICATION

A. GENERAL: This section covers final grade topsoil for channel slopes and lawn areas.

B. MATERIALS:

1. Topsoil: On-site topsoil shall be used for left and right bank channel slopes. All topsoil shall be a friable, loamy mixture and of similar texture to the project site soil type to the satisfaction and approval of the Owner. It shall not have a mixture of subsoil and contain no slag, cinders, stones, lumps of soil, sticks, roots, trash or other extraneous materials larger than 1-1/2 inches in diameter. Topsoil must also be free of plants or plant parts of common bermuda-grass, johnsongrass, nutsedge, poison ivy and Canada thistle. All topsoil shall be tested by a reputable laboratory for pH and soluble salts. If needed, pH correction material shall be applied at a rate sufficient to correct the pH to a range of 6.0-7.0. Soluble salts shall not be higher than 500 parts per million. Topsoil shall meet the standards set forth in Section 11-1, paragraph B of the Midwest Turfgrass Growers Association standard specification.

a. No plant material shall be planted in soil that has been chemically treated until sufficient time has elapsed to permit dissipation of all toxic materials. The Contractor shall assume full responsibility for any loss or damage to the plants arising from improper use of chemicals or due to his failure to allow sufficient time to permit dissipation of toxic residues, whether or not such materials are specified herein.

2. Tests:

a. The contractor shall be responsible for providing physical and fertility analysis of topsoil.

b. Analyze topsoil to ascertain silt clay (Boyoucas); percentage of nitrogen, phosphorus, potash, organic matter content, pH value and soluble salts.

c. Submit both the physical and fertility analysis for approval, SD09-GA-RE.

C. INSTALLATION:

1. General: Before all work in this Section, carefully inspect the installed work of all other trades and verify that all such work is complete to the point this installation may properly commence.

a. In case of discrepancy, immediately notify the Owner.

b. Do not proceed with the installation in areas of discrepancy until all such discrepancies have been fully resolved.

Verify substrate base has been contoured and compacted.

2. Substrate Preparation :

a. Scarify subgrade to a minimum depth of 4-inches where topsoil is scheduled. Scarify in areas where equipment is used for hauling and spreading topsoil and has compacted subsoil

b. Remove stones, sticks, debris, roots, branches and other extraneous matter measuring over 1-1/2 inches in any dimension.

c. Eliminate uneven areas and low spots.

d. Limit preparation to areas that will be planted promptly after preparation.

3. Placing Topsoil:

a. Place topsoil in areas at the minimum thickness indicated in "7.Schedule" on Page 02923-3.

1. Spread topsoil to minimum depth required to meet lines, grades and elevations shown, after light rolling and natural settlement. Rake until smooth.

2. Place approximately ½ the total amount of topsoil required. Work into top of loosened subgrade to create a transition layer and then place remainder of planting soil.

b. Topsoil shall not be placed while in a frozen or muddy condition, when the subgrade is excessively wet, or in a condition that may otherwise be detrimental to proper grading.

c. Fine grade topsoil eliminating rough or low areas. Maintain profile and contour of subgrade.

d. Remove roots, weeds, rocks and foreign material while spreading.

e. Compact placed topsoil to 85 percent standard proctor density in accordance with D 698.

f. Remove surplus subsoil from the site. Surplus topsoil shall be wasted on the site at a location designated.

g. Leave stockpile area and site clean and raked, ready to receive seeding. Stockpile area shall be a location designated.

4. Grading:

a. Finish Grading. The finishing of side slopes, cuts and fills shall be to smooth uniform surfaces that will merge with the adjacent terrain without noticeable break. Finishing shall be done according to grades shown on the drawings and without variations that are readily discernible.

b. Finish grading shall be done to the lines and grades shown on the drawings. All areas disturbed by the Contractor during construction operations shall be bladed smooth, shaped and compacted as specified hereinbefore.

6. Protection:

a. Protect existing trees, structures, fences, sidewalks, utilities, paving and curbs. For protection of existing trees, see Specification Section 02924, Tree Preservation.

7. Schedule:

a. Compacted topsoil thickness at the following area:

1. ***This depth is contingent upon the quantity of stockpiled topsoil available on-site. If the amount of stockpiled topsoil is insufficient, the subgrade shall be raised to accommodate the deficiency.***

8. Clean Up: After the topsoil has been spread and the final grades approved, the site shall be cleared of all grade stakes, surface trash and other objects that would hinder installation and/or maintenance of bioengineer plantings. Paved areas over which hauling operations are conducted shall be kept clean, and any soil that may be brought upon the surfacing shall be promptly removed. The wheels of all vehicles shall be kept clean to avoid tracking soil on the surfacing of roads or other paved areas.

D. PAYMENT:

1. See Specification Section 02201, Earthwork.

02924 TREE PRESERVATION

A. GENERAL:

1. Selective Clearing is removal of undesirable trees and underbrush around specimen trees and brush as designated on the drawings and/or instructed by the Contracting Officer.

2. Specimen Trees as shown on the drawings and be approved by the Contracting Officer to save, shall be protected from damage incident to clearing, grubbing, and construction operations, by the erection of timber barriers or by such other means as the circumstances require. Such barriers must be placed and be approved by the Contracting Officer before construction operations can proceed.

3. Plant Preservation: All plant materials on the site to be saved and/or relocated shall be marked specifically by the Contracting Officer. No plant material may be removed from the site prior to the Contracting Officer's inspection. All plant material to be saved/or relocated will be protected from injury to the roots and to the branches, to a distance five feet beyond the drip-line. No grading, trenching, pruning, or storage of materials may go in this area, except as approved by the Contracting Officer.

a. Penalty: The contractor shall pay a penalty for any plant removed from the site which was not specified as such by the Contracting Officer. The CONTRACTOR shall pay for any such plant which dies due to damage during construction. The penalty is as follows:

Trunk Diameter at a point 4 feet above existing grade	Penalty
4" to 6"	$200.00
6" to 8"	$300.00
8" to 12"	$1,000.00
12" to 20"	$1,500.00
20" and larger	$3,000.00

b. Unaccountable: The contractor shall not be held accountable for

damage to plants resulting from placement of fill or removal of soil where such action is required by the Contract Documents. Any plant, the trunk of which is within ten (10) feet from any structure, shall be exempt from these penalties as established below in the event that the contractor or any of his subcontractors cause the loss or removal of plants designated to be saved under the provisions of this specification.

c. Plants will be rated by the Contracting Officer as to variety, size, condition and site importance with the above figures acting as maximum penalties with the lowest assessment amount to no less than one-half of the above penalty figure.

d. Trees and plants to be relocated: Any tree or plants moved shall be done in a timely manner so as not to delay construction progress. The contractor shall take extra measures to protect the tree during the relocation by erecting barricades, staking, trimming, etc. as required. All trees to be relocated shall be performed by certified arborists. Tree relocation shall be performed between October 15th, and April 15th. Tree relocation shall be measured per each tree relocated, in place and accepted.

PAYMENT: No additional payment shall be made for Tree Preservation. It shall be considered incidental to other contract bid items, SECTION: CLEARING, GRUBBING AND DEMOLITION.

SECTION 02950

TREES, SHRUBS, GROUND COVERS, AND VINES

PART 1 - GENERAL

1. REFERENCES: The publications listed below form a part of this specification to the extent referenced. The publications are referred to in the text by basic designation only.

1.1 American Joint Committee on Horticultural Nomenclature (AJCHN):

AJCHN 01	(1942, 2nd Ed.) Standard Plant Names

1.2 American National Standards Institute (ANSI):

ANSI Z60.1	(1986) Nursery Stock

1.3 American Society for Testing and Materials (ASTM):

ASTM C 136	(1984; Rev. A) Sieve Analysis of Fine and Course Aggregates
ASTM D 2103	(1986) Polyethylene Film and Sheeting
ASTM D 2178	(1986; Rev. A) Asphalt Glass Felt Used in Roofing and Waterproofing
ASTM D 2607	(1969) Peats, Mosses, Humus, and Related Products

1.4 American Wood-Preserver's Association (AWPA):

AWPA C2	(1987) Lumber, Timbers, Bridge Ties and Mine Ties -- Preservative Treatment by Pressure Processes

1.5 Federal Specifications (FS):

FS 0-F-241	(Rev. D) Fertilizers, Mixed, Commercial

2. SUBMITTALS: The following shall be submitted in accordance with SECTION 01300: SUBMITTALS:

2.1 SD-50, Samples: The following samples shall be submitted for approval before work is started:

2.1.1 Topsoil: Representative samples shall be taken from several locations in the area under consideration.

2.1.2 Soil amendments: Ten pounds of each type to be used in the project.

2.1.3 Inert mulch: Ten pounds of each type to be used in the project.

2.1.4 Organic mulch: Ten pounds of each type to be used in the project.

2.2 SD-70, Test reports: Certified testing shall be performed by an approved independent laboratory within 30 days of submittal of reports. [Test reports on a previously tested material shall be accompanied by certificates from the manufacturer certifying that the material is equal in all respects to that proposed for this project.] Certified copies of the reports of tests listed below shall be submitted:

2.2.1 Offsite topsoil: For pH, salts, potash, and phosphorous.

2.2.2 Organic amendments: For classification of total nitrogen, moisture, ash and organic matter, sand content and pH.

2.3 SD-80, Operation and maintenance manuals: Written instructions for year-round care of installed plants shall be furnished.

3. SOURCE INSPECTIONS:

3.1 Plant materials shall be inspected at the growing site and tagged or otherwise approved for delivery.

3.2 Topsoil: The source of topsoil shall be inspected to determine the acceptability of the topsoil, including the maximum depth to which it is to be stripped.

4. DELIVERY, STORAGE, AND HANDLING:

4.1 Delivery:

4.1.1 Inspection upon arrival: Plant material shall be inspected upon arrival at the jobsite and unacceptable plant material shall be removed from the jobsite.

4.1.2 Protection during delivery: Plants shall be protected during delivery to prevent damage to the root balls or desiccation of leaves. Trees shall be protected during transportation by tying in the branches and covering all exposed branches.

4.1.3 Tree spades: The use of equipment such as "tree spades" shall be permitted provided that the plant balls are sized in accordance with ANSI Z60.1 and tops are protected from damage.

4.1.4 Soil conditioners and amendments shall be delivered to the site in the original, unopened containers bearing the manufacturer's guaranteed chemical analysis and name. In lieu of containers, soil conditioners and amendments may be furnished in bulk and a certificate from the manufacturer indicating the above information shall accompany each delivery.

4.1.5 Pesticides: All pesticide material, including soil fumigants, shall be delivered to the site in the original unopened containers. Containers that do not have a legible label that identifies the Environmental Protection Agency registration number and the manufacturer's registered uses will be rejected.

4.2 Storage:

4.2.1 Plant storage: Plants not installed on the day of arrival at the site shall be stored and protected. Outside storage locations shall be continually shaded and protected from the wind.

Plants stored on the project shall be protected from any drying at all times by covering the balls or roots with moist sawdust, wood chips, shredded bark, peat moss, or other similar mulching material. Plants, including those in containers, shall be kept in a moist condition until planted by watering with a fine mist spray.

4.2.2 Storage of other materials: Soil conditions and amendments shall be kept in dry storage away from contaminants. Soil sterilant shall be isolated from any other landscape materials. Pesticide material shall be kept in dry storage and shall not contaminate adjacent material, and shall be handled and stored following manufacturer's directions. Storage of materials shall be in areas designated or as approved by the Contracting Officer.

4.3 Handling: Care shall be taken to avoid drying or damaging plants being moved from the nursery or storage area to the planting site. Balled and burlapped plants shall be handled carefully to avoid cracking or breaking the earth ball. Plants shall not be handled by the trunk or stems.

Plants shall be protected from freezing or drying by a covering of burlap, tarpaulin, or mulching material during transportation from the heeling-in bed to the planting site. Damaged plants will be rejected and shall be removed from the site.

4.4 Identification: All plants shall be identified with durable waterproof labels and weather-resistant ink. Labels shall be securely attached to plants, bundles, or containers of plants and shall state the correct plant name and size.

PART 2 - PRODUCTS

5. PLANTINGS: Plants shall be nursery grown or plantation grown stock conforming to ANSI Z60.1 and shall be of the varieties specified in the plant list bearing botanical names listed in the publication for Standardized Plant Names.

5.1 Planting stock shall be well-branched and well-formed, sound, vigorous, healthy, and free from disease, sunscald, windburn, abrasion, and harmful insects or insect eggs and shall have healthy, normal, and unbroken root systems. Deciduous trees and shrubs shall be symmetrically developed, of uniform habit of growth, with straight boles or stems, and free from objectionable disfigurements. Evergreen trees and shrubs shall have well-developed symmetrical tops with typical spread of branches for each particular species or variety. Ground covers and vines shall be vigorous, have the number and length of runners and clump size specified, and be the proper age for the grade of plants specified. Only vines and ground cover plants well established

in removable containers, integral containers, or formed homogeneous soil sections shall be used. Plants shall have been grown under climatic conditions similar to those in the locality of the project. Plants budding into leaf or having soft growth shall be sprayed with an antidesiccant at the nursery and/or the collecting field before digging.

5.2 Plant size: The minimum acceptable sizes of all plants, measured before pruning and with branches in normal position, shall conform to the measurements indicated. Plants larger in size than specified may be used as approved. If larger plants are used, the ball of earth or spread of roots shall be increased in accordance with ANSI Z60.1.

5.3 Plant preparation: Plants shall be dug and prepared for shipment in a manner that will not cause damage to branches, shape, and future development after planting. Balled and burlapped and balled and potted plants shall have ball sizes and ratios conforming to ANSI Z60.1. Plants shall be balled with firm, natural balls of soil. Balled and burlapped plants shall be wrapped firmly with burlap, strong cloth, or plastic and tied. Balled and platformed plants shall be balled and wrapped in the same manner as balled and burlapped plants and bound securely to strong platforms.

The roots of bare-root shall be covered with a thick coating of mud by "puddling" after the plants are dug. Container grown plants shall have sufficient root growth to hold the earth intact when removed from containers but shall not be root bound.

6. TOPSOIL shall be the existing surface soil stripped to the depth indicated and stockpiled on the site and amended by the addition of a pH adjuster and a soil conditioner at the rate recommended by the soil test.

Additional topsoil, if required, beyond that available from stripping operations, shall be a natural, friable soil representative of productive soils at the site. It shall be obtained from well-drained areas and shall be free of any admixture of subsoil, foreign matter, objects larger than one inch in any dimension, toxic substances, and any material or substances that may be harmful to plant growth. The pH range shall be 5.3 to 6.0. Topsoil that does not meet this pH range shall be amended by the addition of pH adjusters, at a rate recommended by the County Extension Service agent, based on soil tests.

7. SOIL CONDITIONERS AND AMENDMENTS:

7.1 pH adjusters: Agricultural limestone shall have a minimum calcium carbonate equivalent of 90 percent and shall be ground to such a fineness that at least 90 percent will pass a 10-mesh sieve and at least 50 percent will pass a 60-mesh sieve. Coarser materials will be acceptable provided they pass the 10-mesh sieve and the specified rates of application are increased in linear proportion to the quantities passing the 60-mesh sieve where zero passage indicates doubling the application rate.

Other liming material shall have a minimum calcium carbonate equivalent of 80 percent and shall be crushed to such a fineness that at least 90 percent will pass an 8-mesh sieve and at least 80 percent will pass a 10-mesh sieve.

Aluminum sulfate shall be commercial grade.

7.2 Treatment of saline soil: Saline soil shall be leached out by a

controlled amount of water sufficient enough to leach the salts to a level below the root zone. Water used for this purpose shall have a low salt content.

7.3 Peat shall be a natural product of hypnum moss peat, reed-sedge peat, or peat humus derived from a freshwater site conforming to ASTM D 2607 except as otherwise specified. Peat shall be shredded and granulated to pass a 1/2-inch mesh screen and conditioned in storage piles for at least 6 months after excavation.

7.4 Sand shall be clean and free of toxic materials and at least 95 percent by weight shall pass a 60-mesh sieve, and 10 percent by weight shall pass a 16-mesh sieve.

7.5 Vermiculite shall be horticultural grade and free of any toxic materials.

7.6 Manure: Rotted manure shall be unleached stable or cattle manure containing not more than 10 percent by volume of straw, sawdust, or other bedding materials and containing no chemicals or ingredients harmful to plants. The manure shall be heat treated to kill weed seeds.

7.7 Sawdust: Rotted sawdust shall have 7.5 pounds of nitrogen added uniformly to each cubic yard and shall be free of chips, stones, sticks, soil, and toxic substances.

7.8 Gypsum shall be 90 percent pure, free of any toxic materials, and at least 95 percent by weight shall pass a 4-mesh sieve.

8. PLANTING SOIL MIXTURE: The planting soil mixture shall be composed of 2 parts topsoil and 1 part peat.

9. FERTILIZER shall be commercial grade and uniform in composition.

9.1 Slow release: Tablet form slow release fertilizers shall be used and shall bear the manufacturer's guaranteed statement of analysis. Slow release fertilizers shall contain a minimum percentage by weight of: 20 nitrogen, 10 available phosphoric acid, and 5 potash. Fertilizer tablet shall have a longevity of 2 years based on a 70 degree F average soil temperature.

*Note: Tablets will be placed 4 to 6 inches deep and 1.5 to 3 inches beyond edge of root ball. Do not place tablet(s) in bottom of hole i.e., beneath root ball. Application rate as per table.

APPLICATION RATES

Small ground cover plants (less than 1 gallon containers)	1-5 gram tablet
Small evergreen spreaders (less than 9 inches high or spread)	2-5 gram tablets
Small shrubs (less than 12 inches high)	2-10 gram or 1-20 to 22 gram tablet(s)
Medium shrubs (12 to 18 inches high)	2-20 to 22 gram tablets
Large shrubs (24 inches high or spread) and greater	3-20 to 22 gram tablets

Ornamental trees and shade trees apply 1-20 to 22 gram tablet per each 1/2-inch caliper trunk size. Example: A 2-1/2 caliper tree would get 5-20 to 22 gram tablets placed around the periphery of the root ball.

9.2 Bonemeal shall be a finely ground, steamed bone product containing from 2 to 4 percent nitrogen and 16 to 40 percent phosphoric acid.

10. SOIL FUMIGANT shall be 97 percent methyl bromide and 3 percent chloropicrin.

11. MULCH shall be free from deleterious materials and shall be stored so as to prevent inclusion of foreign materials.

11.1 Organic mulch materials shall be ground or shredded bark at least 70 percent of which is ranging in size from 1 to 4 inches in overall dimensional length and/or diameter. All wood particles in excess of 6 inches shall be removed during placement of mulch.

12. TRUNK WRAPPING MATERIAL: Tree wrap shall be two thicknesses of crinkled paper cemented together with a layer of bituminous material. Wrapping material shall be a minimum of 4 inches in width and have a stretch factor of 33-1/3 percent. Twine for tying shall be lightly tarred medium or coarse sisal yarn. Coiled plastic shields (provided with perforations i.e., holes) may be substituted for tree wrap. Design must be approved by Contracting Officer.

13. GUYING AND STAKING MATERIAL:

13.1 Stakes for street-side trees 2 inches caliper and larger shall be heavy gauge steel fence posts painted dark brown or green. See paragraph 20.8 for guying non-street trees.

13.2 Guy wire: Guying wire shall be 12 gauge annealed galvanized steel.

13.3 Guy cable: Guying cable shall be a minimum of five-strand, 3/16-inch diameter steel cable.

13.4 Guards: Hose chafing guards shall be new or used 2-ply reinforced rubber or smooth surfaced plastic hose and shall be all the same color on the project.

13.5 Flags to be fastened to guys shall be fluorescent orange surveyor's plastic tape, and 6 inches in length [sound wood, nominal 3 inch by 12 inch by 1/2 inch and painted fluorescent orange].

14. EDGING MATERIAL: Metal edging for planting beds located on the side slopes shall be galvanized steel with slots provided for stakes and shall be at least 10-gauge, 4-inches wide, and supplied in at least 16-foot lengths. Anchoring stakes shall be of similar material, a minimum of 14 inches long, and tapered.

15. WATER shall not contain elements toxic to plant life.

16. ANTIDESICCANT shall be an emulsion that will provide a film over plant surfaces permeable enough to permit transpiration, and will not damage the plant.

17. GEOTEXTILES: A 3-dimensional, semirigid, cellular (honeycomb) designed geotextile (Armator by AKZO, Geoweb by Presto or similar) shall be used in poolside planting beds, planting boxes and planting strips, to stabilize soil fill and reduce surface erosion. This material shall be a thin wall (.040 - .080 inch thick) polyester, polyethylene, polypropolene or plasticized base, 4 to 6 inches in depth. Material shall be easily cut with a knife or shears. All joints shall be bonded or fastened (glued, stitched or other means) using only products specified by the manufacturer of the geotextile. Anchor pins shall be used at regular intervals to secure the geotextile panels and prevent lateral deformation. Upstream and downstream edges of all panels shall be secured with anchor pins (minimum length 15 inches). Cells of the matrix shall be filled with compacted top soil to the upper edge. Special care shall be taken to assure that the upper edges of the material lie level with the top surface of the adjoining sidewalk and wall. Tensile strength shall be a minimum of 70 pounds per square inch; tensile strength at joints a minimum 35 pounds per square inch. Opening size of the individual cells shall be a minimum of 36 and a maximum of 160 square inches.

18. TREE WOUND DRESSING shall be a black asphalt-base antiseptic paint.

PART 3 - EXECUTION

19. SITE PREPARATION:

19.1 Clearing and grading: Clearing shall consist of the satisfactory removal and disposal of brush, snags, and rubbish occurring within the area shown. Clearing shall be accomplished by hand within 5 feet of existing vegetation to be left standing. Grading shall conform to the lines and grades shown.

19.2 Layout: Plant material locations and bed outlines shall be staked on the project site before any plant pits or beds are dug. Plant material locations may be adjusted by the Contracting Officer to meet field conditions.

19.3 Protection of existing vegetation: If lawns have been established prior to planting operations, the surrounding turf shall be covered before

excavations are made in a manner that will protect turf areas. Existing trees, shrubbery, and beds that are to be preserved shall be barricaded in a manner that will effectively protect them during planting operations.19.4 Turf removal: Where planting beds occur in existing turf areas, the turf shall be removed to a depth that will ensure the removal of the entire root system.

19.5 Underground obstructions to planting: If underground utilities, construction, or solid rock ledges are encountered, other locations for planting may be selected by the Contracting Officer.

19.6 Plant pits shall be dug to produce vertical sides and flat, uncompacted bottoms. When pits are dug with an auger and the sides of the pits become glazed, the glazed surface shall be scarified. The size of plant pits shall be as shown. The minimum allowable dimensions of plant pits shall be 6 inches deeper than the depth of ball or the depth of base roots; for ball or root spreads up to 2 feet, pit diameters shall be twice the root spread; for ball or root spreads from 2 to 4 feet, pit diameters shall be 2 feet greater; for ball or root spreads over 4 feet, pit diameters shall be 1-1/2 times the ball root spread.

19.7 Plant beds in existing soil: Where existing soil is to be used in place, plant beds shall be tilled to a depth of 8 inches. Peat shall be spread uniformly over the bed to a depth of 2 inches and thoroughly incorporated into the existing soil to a depth of 8 inches using a rotary-tiller or similar type of equipment to obtain a uniform and well pulverized soil mix. During tillage operations all sticks, stones, roots, and other objectionable materials shall be removed. Plant beds shall be brought to a smooth and even surface conforming to established grades.

19.8 Plant beds in replaced soil: Existing soil to be replaced in plant beds shall be excavated to a depth of 4 inches and replaced with approved planting soil mixture or topsoil. Plant beds shall be brought to a smooth and even surface conforming to established grades.

19.9 Soil fumigation: All areas so indicated shall be treated with the specified material applied according to the manufacturer's recommendations. Soils stripped from within project limits will not require fumigation.

19.10 Herbicide and pesticide application: Herbicides, insecticides and fungicides shall be applied as needed and in accordance with the manufacturer's recommendations.

20. INSTALLATION:

20.1 Planting seasons and conditions: Planting shall be done when the ground is not frozen, snow covered, or in an otherwise unsuitable condition for planting. Planting shall be done within the following dates:

20.1.1 Deciduous material from 15 March to 1 June for spring-summer planting and from 1 October to 15 December for fall planting.

20.1.2 Evergreen material from 15 March to 1 June for spring-summer planting and from 1 October to 15 December for fall planting.

20.2 Setting plants: Balled and burlapped and container-grown plants shall be handled and moved only by the ball or container. Plants shall be set plumb and held in position until sufficient soil has been firmly placed around roots or ball. Plants shall be set in relation to surrounding grade so that they are even with the depth at which they were grown in the nursery, collecting field, or container. Fertilizer in tablet form shall be placed prior to backfilling and in accordance with table provided in section 9.1. Ground cover plants may be planted after the mulch is in place. Care shall be taken to avoid contaminating the mulch with the planting soil. Geotextile used in the planting strips, boxes and beds shall be cut to provide enlarged voids for plants whose root balls exceed the grid openings in the material. Reducing the size of the root ball to fit through the grid openings in the geotextile shall not be permitted.

20.2.1 Balled and burlapped stock shall be backfilled with approved planting soil mixture or topsoil to approximately half the depth of the ball and then tamped and watered. Burlap and tying materials shall be carefully removed or opened and folded back. Plastic wrap shall be completely removed before the placement of backfill. The remainder of backfill of planting soil mixture or topsoil shall be tamped and watered. Earth saucers or water basins shall then be formed around isolated plants when possible. Water holding basins shall be ample enough in size and height to hold at least 2-1/2 gallons for shrubs or 5 gallons for trees.

20.2.2 Existing stock which is moved by means of a mechanical transplanter shall be removed from the ground with a ball attached which meets the requirements of paragraph: PLANT PREPARATION. The ball shall be wrapped with proper material and kept moist if it is not replanted within one hour. The plant's stem or trunk shall be centered in the ball, and all roots at the ball's surface shall be cut cleanly. No roots shall be pulled from the ground.

20.2.3 Container-grown stock shall be removed from containers without damaging plant or root system. Planting shall be completed as specified for balled and burlapped plants.

20.3 Fertilization:

20.3.1 Application: Tablet form slow release fertilizer shall be applied to existing trees at the rate and method described in section 9.1. Refer to planting typicals for further explanation as to placement location. Fertilizer shall be applied to within 4 to 6 inches of the surface of the surrounding grade, and topsoil or sand shall be used to fill the hole up to the surrounding grade.

20.4 Watering: All watering shall be done in a manner which will provide uniform coverage but which will not cause erosion or damage to the finished surface. Sufficient water shall be applied to penetrate the planting bed to a depth of 4 inches.

20.5 Edging plant beds or individual plants: Approved metal edging material shall be installed as indicated on the plans.

Beds or individual plants shall be uniformly edged, using a sharp tool to provide a clear cut division line between the planted area and the adjacent lawn. Bed shape shall be as indicated on the plans. Individual plant pits shall be circular in shape. Geotextile and erosion mat shall be cut to accommodate placement of the edging material. All edges created from cutting the geotextile and/or erosion mat material shall be anchored as specified by the manufacturer.

20.6 Mulching shall take place within 48 hours after planting. Mulch shall be kept out of the crowns of shrubs and off buildings, sidewalks, light standards, and other structures.

20.6.1 Filter fabric: All planting beds located on sideslopes (excluding those located where erosion mat is used) shall incorporate the use of filter fabric as an underlayment between the ground surface and the mulch. Fabric shall: effectively suppress weeds; resist tearing or puncturing; readily allow passage of air, water and nutrients through to plant roots; be ultra-violet stabilized and able to withstand full exposure to the sun for at least 5 years; and not rot or mildew or become brittle in cold weather. Fabric shall be laid so as to cover the entire planting bed area and shall be jointed (pieced) only when it is unavoidable. When jointing is unavoidable fabric shall be laid with edges lapped 6 inches and pinned at a spacing of every 2 feet. Openings in the fabric or plants shall be made by cutting an "X" at the desired location. After planting is completed the openings shall be closed by rolling the flaps cut in the fabric flat beneath the plant and pinned as necessary. Fabric shall be pinned around the edges of the planting bed at 2 foot intervals. Additional pinning shall be used where needed to ensure the fabric is securely anchored. Fabric shall be a 5-ounce polypropylene material, black, dark brown or green in color, and in rolls that are a minimum of 10 feet wide and 200 feet in length.

20.6.2 Organic mulch shall be spread to a uniform thickness of 4 inches.

20.7 Wrapping: The trunks of deciduous trees shall be wrapped within 48 hours after planting. The trunks of the trees shall be inspected for physical damage or insect infestation and required treatment or rejection prior to the wrapping operation shall be determined. The trunks of deciduous trees, 1-1/2 inches or greater in caliper, shall be wrapped with the specified material. Paper wrapping material will begin at the base and extend to the first branches. The paper wrapping shall be securely tied at the top and bottom and at 18-inch maximum intervals with twine. Plastic shields when used shall be placed firmly against the base of the tree.

20.8 Anchoring and guying: Trees shall be staked and guyed as indicated on detail drawings. The trees shall be held firmly between the anchors with guying lines to each anchor. Rubber chafing guards or nylon slings shall be used where wire would contact the plant. Trees shall be held firmly in place with three guying lines spaced equidistantly from each other and anchored to the ground. The guying lines protected by hose chafing guards or slings shall be attached to the plant at a point equal to approximately half its height. Metal anchors shall be driven or screwed into the ground at a 60° angle and to a minimum depth of 18 inches in such a manner as not to injure the ball or roots. Anchors shall be driven into undisturbed soil a minimum of 18 inches outside of the plant pit. Flags shall be securely fastened on each guy wire approximately two-thirds of the distance up from ground level.

20.9 Pruning:

20.9.1 New plantings: New plant material shall be pruned in the following manner: Dead and broken branches shall be removed. Deciduous trees and shrubs shall be pruned to reduce total amount of anticipated foliage by one-fourth to one-third. Typical growth habit of individual plants shall be retained with as much height and spread as is practicable. Cuts shall be made with sharp instruments, and shall be flush with trunk or adjacent branch to ensure elimination of stubs. "Headback" cuts at right angles to line of growth shall not be permitted. Trees shall not be poled or the leader removed, nor shall the leader be pruned or "topped off." Trimmings shall be removed from the site. Cuts 1/2 inch in diameter and larger shall be painted with the specified tree wound dressing.

20.9.2 Existing trees to be treated are as indicated by tags on the site. Tree pruning and cavity work shall be performed by an aborist. Dead wood 1/2 inch or more in diameter, branches interfering with or hindering the healthy growth of the trees, and diseased branches shall be removed with a clean cut made flush with parent trunk. Cutting back or removal of branches shall be done as necessary to give the trees proper shape and balance. In removing large limbs, the initial cut shall be made on the underside at a safe distance from the trunk or lateral, to prevent ripping of bark. Large branches or limbs that cannot be removed in one piece, without endangering traffic or damaging property, shall be removed in sections and lowered by ropes. Workmen shall not be permitted to climb trees with climbing spurs. Stubs or improper cuts resulting from former pruning or limbs that have been broken shall be cut off flush and painted in order to promote proper healing. Girdling roots shall be removed. Cuts or wounds measuring 1/2 or more inches in diameter and exposed wood and scars resulting from previous work or damage shall be cleaned and painted with specified tree wound dressing. Decayed wood shall be removed to expose healthy tissue. Cavities shall be shaped to provide drainage; exposed cambium layers around cavities shall be promptly sealed with shellac; and the entire cavity shall be painted with specified tree wound dressing.

20.10 Waste removal and turf repair: Excess and waste material shall be removed from the site. Existing grass areas that have been damaged or scarred during planting operations shall be restored to their original condition.

20.11 Maintenance during installation: Maintenance operations shall begin immediately after each plant is planted and shall continue as required until final acceptance. Plants shall be kept in a healthy, growing condition by watering, pruning, spraying, weeding, and any other necessary operations of maintenance. Plant saucers and beds shall be kept free of weeds, grass, and other undesired vegetation. Plants shall be inspected at least once per week during the installation period and needed maintenance performed.

21. PLANT ESTABLISHMENT: Plantings shall proceed to completion within each of the reaches designated on the drawings, before advancing to another reach.

21.1 Beginning date of the plant establishment period shall vary by reaches.

21.2 Establishment:

21.2.1 Watering: Plants shall be watered as necessary to maintain an adequate supply of moisture within the root zone. An adequate supply of moisture is estimated to be the equivalent of 1 inch of absorbed water per week that is delivered at weekly intervals in the form of natural rain or is augmented as required by periodic waterings. Water shall not be applied with a force sufficient to displace mulch and shall not be applied so quickly that it cannot be absorbed by the mulch and plants. Dead plants shall be removed and replaced.

21.2.2 Maintenance: Plants shall be pruned and mulch replaced as required.

Stakes, guys, and eroded plant saucers shall be replaced as required. In plant beds, grass and weeds shall not be allowed to reach a height of 3 inches before being completely removed, including the root growth. When plants are in groups other than cultivated beds, the Contractor shall not permit grass or

other vegetation between them to become more than 5 inches in height. Other work, such as spraying insecticides and fungicides to control pests, shall be done to ensure plant survival in a healthy, growing condition.

22. PROTECTION OF EXISTING PLANT MATERIALS: The Contractor is responsible for protecting all existing plant materials which have been designated to be saved within the project limits. Existing trees and shrubs that are to be retained shall be marked on site by the Contracting Officer or representative(s) prior to initiation of construction. Marking procedures and materials used shall be uniform throughout the project limits. Method for marking plants shall be agreed upon by the Contracting Officer and Contractor prior to initiation of construction. Contractor shall be responsible for protecting these plants from damage throughout the entire contract period. All plants which shall be exposed to potential damage from construction activities will be protected with barricades, fencing or other appropriate means. Method(s) for plant protection must be approved by the Contracting Officer or representative. Any method which abrades, punctures or scars the plant is unacceptable. Protection shall be provided to all parts of the plants including roots, trunk and branches. In the event the Contractor is confronted with a necessity for deviating from these protective measures in any manner, approval shall first be granted by the Contracting Officer or representative before proceeding.

23. FINAL ACCEPTANCE:

23.1 Inspection and Replacements: An inspection will be held after one full growing season (one full calendar year, spring-thru-spring or fall-thru-fall) to determine plant acceptability and the number of replacements. Plants not in healthy growing condition will be noted and as soon as seasonal conditions permit shall be removed from the site and replaced with plants of the same species and sizes as originally specified. Alternate or substituted varieties of plants shall be used only if approved. The Contractor will not be held responsible for replacement of plants which are washed away or are severely damaged solely from flooding.

23.2 Final inspection: A final inspection of all plants will be held after the replacement planting has been completed. No additional plant establishment period will be required for replacement plants.

24. BIDDING SCHEDULE ITEM applicable to the work in this section is as follows:

ITEM	UNIT

"Landscape Planting" lump sum

* * * * * *

DIVISION 3 - CONCRETE

Section No.	Title
03101	Concrete Formwork
03150	Expansion Joints and Waterstops
03151	Temporary Works
03210	Reinforcement Steel
03311	Cast-In-Place Structural Concrete for Civil Works
03312	Masonry Seal Coating and Graffiti Control
03330	Aesthetic Treatment for Retaining Walls
03362	Manhole Cementitious Liner
03370	Sewer Manhole Construction
03400	Paved Slope Protection

03101 FORMWORK FOR CONCRETE

A. RELATED WORK SPECIFIED ELSEWHERE:

SECTION: PORTLAND CEMENT CONCRETE-STRUCTURES
SECTION: Aesthetic Treatment For Retaining Walls

B. REFERENCES STANDARDS:

AMERICAN CONCRETE INSTITUTE (ACI) STANDARDS

ACI 347R-88 Recommend Practice for Concrete Formwork

C. SUBMITTALS:

1. Shop Drawings. Drawings and computations for all formwork required shall be submitted at least 30 days before either fabrication on site or before delivery of prefabricated forms. The drawings and data submitted shall include the type, size, quantity and strength of all materials of which the forms are made, the plan for jointing of facing panels, details affecting the appearance, and the assumed design values and loading conditions, SD01-GA-EC; SD04-GA-EC.

2. Manufacturers literature shall be submitted for plywood, concrete form hardboard, form accessories, prefabricated forms, and form coating, SD06-FIO-RE.

D. PRODUCTS:

Design. The design and engineering of the formwork, as well as its construction, shall be the responsibility of the Contractor. The formwork shall be designed for loads, lateral pressure and allowable stresses in accordance with Chapter 1 of ACI Standard 347. Forms shall have sufficient strength to withstand the pressure resulting from placement and vibration of the concrete and shall have sufficient rigidity to maintain specified tolerances.

E. MATERIALS:

1. Forms except where aesthetic treatment is required shall be fabricated with facing

materials that produce the specified construction tolerance and surface requirments of SECTION: PORTLAND CEMENT CONCRETE-STRUCTURES.

2. Forms for curved surfaces shall meet the following requirements in addition to the specified construction tolerance and surface requirements of SECTION: PORTLAND CEMENT CONCRETE-STRUCTURES:

FORMS FOR CURVED WALLS

Curve Radii	Max. Allowable Chord Length
0'-15'	curved
> 15'- < 25'	1'
> 25'- < 50'	2'
> 50'- < 100'	3'
> 100'- < 350'	4'
> 350'	8'

3. Form Accessories: Ties and other similar form accessories to be partially or wholly embedded in the concrete shall be of a commercially manufactured type. After the ends or end fasteners have been removed, the embedded portion of metal ties shall terminate not less than 2-inches from any concrete surface either exposed to view or exposed to water. Plastic snap ties may be used in locations where the surface will not be exposed to view. Form ties shall be constructed so that the ends or end fasteners can be removed without spalling the concrete.

4. Forms coating shall be a commercial formulation of satisfactory and proven performance that will not bond with, stain or adversely affect the concrete surfaces and will not impair subsequent treatment of concrete surfaces depending upon bond or adhesion nor impede the wetting of surfaces to be cured with water or curing compounds.

F. EXECUTION:

1. Installation: Forms shall be mortar tight, properly aligned and adequately supported to produce concrete surfaces meeting the surface requirements of SECTION: PORTLAND CEMENT CONCRETE-STRUCTURES and conforming to construction tolerance of SECTION: PORTLAND CEMENT

CONCRETE-STRUCTURES. Where concrete surfaces are to be permanently exposed to view, joints in form panels shall be arranged to provide a pleasing appearance. Where forms for continuous surfaces are placed in successive units, care shall be taken to fit the forms over the completed surface so as to obtain accurate alignment of the surface and to prevent leakage of mortar. Forms shall not be re-used if there is any evidence of surface wear and tear or defects which would impair the quality of the surface. All surfaces of forms and embedded materials shall be cleaned of any mortar from previous concreting and of all other foreign material before concrete is placed in them.

2. Chamfering. All exposed joints, edges and external corners shall be chamfered by molding placed in the forms unless the drawings specifically state that chamfering is to be omitted or as otherwise specified. Chamfered joints shall not be permitted where earth or rockfill is placed in contact with concrete surfaces. Chamfered joints shall be terminated a sufficient distance outside the limit of the earth or rockfill so that the end of the joints will be clearly visible.

3. Construction Joints. Grade strips shall be used on all exposed horizontal construction joints so as to obtain a straight and neat horizontal joint. A strip of 1-inch square-edged lumber, bevelled to facilitate removal and oiled, shall be tacked to the inside of the forms at the construction joint. Concrete shall be placed to a point 1 inch above the underside of the strip. The strip shall be removed 1 hour after the concrete has been placed, any irregularities in the joint line leveled off with a wood float, and all laitance removed.

4. Coating. Forms for exposed or painted surfaces shall be coated with form oil or a form-release agent before the form or reinforcement is placed in final position. The coating shall be used as recommended in the manufacturer's printed or written instructions. Forms for unexposed surfaces may be wet with water in lieu of coating immediately before placing concrete, except that in cold weather with probable freezing temperatures coating shall be mandatory. Surplus coating on form surfaces and coating on reinforcing steel and construction joints shall be removed before placing concrete.

5. Removal. Forms shall not be removed without approval and all removal shall be accomplished in a manner which will prevent injury to the concrete. Forms shall not be removed before the expiration of the minimum time indicated below, except as otherwise directed or specifically authorized. When conditions of the work are such

as to justify the requirement, forms will be required to remain in place for a longer period.

6. Unsupported Concrete. Formwork for walls, columns, sides of beams, gravity structures, and other vertical type forms not supporting the weight of concrete shall not be removed in less than 24 hours. The time depends on temperature, lift heights and type and amount of cementitious material in the concrete. Where forms for columns, walls and sides of beams also support formwork for slabs, the removal time of the latter shall govern.

7. Supported Concrete. Supporting forms and shoring shall not be removed for seven days and the structure shall not be subjected to construction loads until the curing period has ended.

G. FIELD QUALITY CONTROL:

Forms and embedded items shall be inspected in sufficient time prior to each concrete placement by the Contractor in order to certify to the Contracting Officer that they are ready to receive concrete. The results of each inspection shall be reported in writing.

H. PAYMENT:

No separate payment will be made for Formwork and all costs in connection therewith shall be included in the contract unit or lump sum prices for the items of work to which the work is incidental.

03150 EXPANSION JOINTS AND WATERSTOPS

1. SCOPE: This section covers the materials, techniques and workmanship requirements for forming expansion, monolith and construction joints in concrete structures, including channel paving.

2. RELATED WORK SPECIFIED ELSEWHERE: Major requirements for concrete work are specified in SECTION: CAST-IN-PLACE CONCRETE.

3. APPLICABLE PUBLICATIONS: The following publications of the issues listed below, but referred to thereafter by basic designation only, form a part of this specification to the extent indicated by the references thereto:

3.1 American Society for Testing and Materials (ASTM) Standards. (With corresponding U.S. Army Corps of Engineers Handbook for Concrete and Cement (CRD) Specifications where indicated.):

D 1752-84 (CRD-C 509)	Preformed Sponge Rubber and Cork Expansion Joint Fillers and Concrete Paving and Structural Construction
D 2628-81 (CRD-C 531)	Preformed Polychloroprene Elastomeric Joints Seals for Concrete Pavements
D 2835-72 (CRD-C 532)	Lubricant for Installation of Preformed Compression Seals in Concrete Pavements

3.2 Federal Specifications (Fed. Spec.): (With corresponding CRD standards where indicated):

TT-S-227 (CRD-C 506)	Sealing Compound, Elastomeric Type, Multi-Component (for Caulking, Sealing, and Glazing in Buildings and OtherStructures)

3.3 U.S. Army Corps of Engineers Handbook for Concrete and Cement (CDR) Specifications.

CRD-C 513 - 74	Rubber Waterstops
CRD-C 572 - 74	Polyvinylchloride Waterstops

4. QUALITY CONTROL:

4.1 Materials tests:

4.1.1 Field-molded sealants: Samples of sealant and primer, when use of primer is recommended by the manufacturer, as required in 5.2 below shall be tested by and at the expense of the Government for compliance with Fed. Spec. TT-S-227. If the sample fails to meet specification requirements, new samples shall be provided and the cost of retesting will be deducted from payments due the Contractor.

4.1.2 Non-Metallic Waterstops: Samples of materials and splices as required in 5.2.2 below shall be visually inspected and tested by and at the expense of the Government for compliance with CRD-C 513 or CRD-C 572, as applicable. If a sample fails to meet the specification requirements, new samples shall be provided.

4.2 Procedure and Performance Qualifications for Splicing Waterstops shall be demonstrated in the presence of the Contracting Officer.

4.2.1 Procedure and performance qualifications for splicing non-metallic waterstops shall be demonstrated by the manufacture at the factory and the Contractor at the job site by each making three splice samples of each size and type of finished waterstop.

4.2.2 Metal Waterstops: Procedure and performance qualifications for splicing metal waterstops shall be demonstrated at the job site by the Contractor. The brazing procedure, brazers and brazing operators for splicing copper waterstops shall be qualified in accordance with Part QB (Brazing), Article XI (Brazing, General Requirements) Paragraph QB-170 (Peel Tests) and other applicable requirements of Articles XI, XII and XIII of Section IX (Welding and Brazing Qualifications) of the ASME Boiler and Pressure Vessel Code. The welding procedure and welders for splicing stainless steel waterstops shall be qualified in accordance with the manufacturer's recommendations.

5. SUBMITTALS:

5.1 Test reports: Certified manufacturer's test reports shall be provided for premolded expansion-joint filler strips and compression seals and lubricant to verify compliance with the applicable specification.

5.2 Samples:

5.2.1 Field-molded sealant and primer: One gallon of field-molded sealant and one quart of primer (when use of primer is recommended by the sealant manufacturer) shall be provided for testing.

5.2.2 Waterstops: Waterstop materials and splice samples shall be submitted for inspection and testing and shall be identified to indicate manufacturer, type of material, size and quantity of material and shipment represented. Each materials sample shall be a piece not less than 12 inches long cut from each 200 feet of finished waterstop furnished, but not less than a total of four linear feet of each type and size furnished. For spliced segments of waterstops to be installed in the work, one splice sample of each size and type for every 50 splices made in the factory and every 10 splices made at the job site shall be furnished for inspection and testing. The splice samples shall be made using straight run pieces with the splice located at the mid-length of the sample and finished as required for the installed waterstop. The total length of each splice sample shall be not less than 12 inches long.

PART 2 - PRODUCTS

6. MATERIALS:

6.1 Expansion joint sponge rubber filler strips, premolded shall conform to ASTM D 1752, Type I.

6.2 Joint Sealants and seals:

6.2.1 Field molded sealants shall conform to Fed. Spec. TT-S-227, Type II for vertical joints and Type I for horizontal joints, Class A. Bond breaker material shall be polyethylene tape, coated paper, metal foil or similar type materials. The backup material shall be compressible, nonshrink, nonreactive with sealant, and nonabsorptive material type such as extruded butyl or polychloroprene foam rubber.

6.2.2 Compression seals shall conform to ASTM D 2628; lubricant for installation shall conform to ASTM D 2835.

6.3 Rubber waterstops shall conform to CRD-C 513. Polyvinylchloride waterstops shall conform to CRD-C 572.

PART 3 - EXECUTION

7. INSTALLATION: Joint locations and details, including materials and methods of installation of joint fillers and waterstops, shall be as specified, shown on the drawings and

as directed. In no case shall any fixed metal be continuous through an expansion or monolith joint.

7.1 Expansion joints: Premolded filler strips shall have oiled wood strips secured to the top thereof and shall be accurately positioned and secured against displacement to clean, smooth concrete surfaces. The wood strips shall be slightly tapered, dressed and of the size required to install filler strips at the desired level below the finished concrete surface and to form the groove for the joint sealant or seals to the size shown on the drawings. Material used to secure premolded fillers and wood strips to concrete shall not harm the concrete and shall be compatible with the joint sealant or seals. The wood strips shall not be removed until after the concrete curing period. The groove shall be thoroughly cleaned of all laitence, curing compound, foreign materials, protrusions of hardened concrete and any dust which shall be blown out of the groove with oil-free compressed air.

7.1.1 Joints with field-molded sealant: Joints shall not be sealed when the sealant, air or concrete temperature is less than 40 degrees F. Bond breaker and backup material shall be installed where required. Joints shall be primed and filled flush with joint sealant in accordance with the manufacturer's recommendations.

7.2 Monolith and painted joints: Joints requiring a bond breaker shall be coated with two coats of bituminous curing compound. Painted joints and vertical monolith joints require a bond breaker. Monolith joints locations shall be submitted for review and approval. Approval of monolith joint locations is required before reinforcing steel shop drawings may be submitted.

7.3 Waterstops shall be carefully and correctly positioned during installation to eliminate faulty installation that may result in joint leakage. All waterstops shall be installed so as to form a continuous watertight diaphragm in each joint. Adequate provision shall be made to support and protect the waterstops during the progress of the work. Any waterstop punctured or damaged shall be replaced or repaired at the Contractor's expense. The concrete shall be thoroughly consolidated in the vicinity of the waterstop. Suitable guards shall be provided to protect exposed projecting edges and ends of partially embedded waterstops from damage when concrete placement has been discontinued.

7.3.1 Splices: Joints in waterstops shall be spliced together by qualified splicers using the approved splicing procedures to form a continuous watertight diaphragm.

7.3.1.1 Non-Metallic Waterstops: All splices shall be made on a bench in a temporary shop provided at the site of the installation or at the manufacturer's plant. A miter guide and portable power saw shall be used to cut the ends to be joined to insure good alignment

and contact between joined surfaces. The continuity of the characteristic features of the cross section of the waterstop *(ribs, tabular center axis, protrusions and the like) shall be maintained across the splice.

7.3.2 Rubber Waterstops: Splices shall be vulcanized in accordance with the approved procedure.

7.3.3 Polyvinylchloride Waterstops: Splices shall be made by heat sealing the adjacent surfaces in accordance with the approved procedure. A thermostatically controlled electric source of heat shall be used to make all splices. The correct temperature at which splices should be made will differ with the material concerned but the applied heat should be sufficient to melt but not char the plastic. Waterstops shall be reformed at splices with a remolding iron with ribs or corrugations to match the pattern of the waterstop. The spliced area, when cooled and bent by hand in as sharp an angle as possible, shall show no sign of separation.

8. MEASUREMENT AND COMPUTATION OF QUANTITIES:

8.1 Expansion and monolith joints: No separate measurement shall be made for expansion monolith joints, waterstops, and all costs in connection therewith shall be included in the contract unit or lump sum prices for the items of work to which the work is incidental.

* * * * * *

SECTION 03151

TEMPORARY WORKS

PART 1 GENERAL

1.1 REFERENCES

1.2 DESCRIPTION

This specification applies to the overpass structure only. This work shall consist of the construction and removal of temporary facilities which are generally designed by the Contractor and employed by the Contractor in the execution of the work and whose failure to perform properly could adversely affect the character of the contract work or endanger the safety of adjacent facilities, property or the public. Appropriate reductions in allowable stresses or loads shall be used for design when other than new or undamaged materials are to be used. Such facilities include, but are not limited to, falsework, forms and form travelers, cofferdams, shoring, water control systems and temporary bridges.

1.3 SUBMITTALS

Government approval is required for submittals with a "GA" designation; submittals having an "FIO" designation are for information only. The following shall be submitted in accordance with Section 01300 SUBMITTAL DESCRIPTIONS:

SD-04 Drawings

Temporary Works Drawings; GA-RE

Six copies of working drawings with design calculations and supporting data in sufficient detail to permit a structural review of the proposed design of a temporary work. When concrete is involved, such data shall include the sequence and rate of placement. Drawings shall be submitted sufficiently in advance of proposed use to allow for their review, revision, it's needed, and approval without delay to the work. The Contractor shall not start the construction of any temporary work for which working drawings are required until the drawings have been approved by the Contracting Officer. Such approval will not relieve the Contractor of responsibility for results obtained by use of these drawings or any of his other responsibilities under the contract.

1.4 DESIGN

The design of temporary works. including allowable stresses, shall conform to an established and generally accepted design code or specification for such work. When manufactured devices are to be employed, the design shall not result in loads on such devices in excess of the load ratings recommended by their manufacturer. The load rating used for special equipment, such as erection trusses, shall conform to the requirements of OSHA and in no case shall the rating exceed 80 percent of the maximum load sustained during load testing of the equipment. The design shall be prepared and the drawings signed by a registered civil engineer.

1.5 CONSTRUCTION

Temporary works shall be constructed in conformance with the approved working drawings. The Contractor shall verify that the quality of the materials and workmanship employed are consistent with that assumed in the design.

1.6 REMOVAL

Unless otherwise permitted, all temporary works shall be removed and shall remain the property of the Contractor upon completion of their use. The area shall be restored to its original or planned condition and cleaned of all debris.

PART 2 PRODUCTS (NOT APPLICABLE)

PART 3 EXECUTION

3.1 FALSEWORK AND FORMS

Falsework is considered to be any temporary structure which supports structural elements of concrete, steel, masonry or other materials during their construction or erection. Forms are considered to be the enclosures or panels which contain the fluid concrete and withstand the forces due to its placement and consolidation. Forms may in turn be supported on falsework. Form travelers, as used in segmental cantilever construction, are considered to be a combination of falsework and forms. Whenever the height of false work exceeds 14 feet or whenever traffic, other than workmen involved in constructing the bridge, will travel under the bridge, the working drawings for the falsework shall be prepared and sealed by a Registered Engineer. False work and forms shall be of sufficient rigidity and strength to safely support all loads imposed and produce in the finished structure the lines and grades indicated on the plans. Forms shall also impart the required surface texture and rustication, and shall not detract from the uniformity of color of formed surfaces.

3.1.1 Falsework design and construction.

Falsework design and construction shall be as specified

3.1.1.1 Loads

The design load for falsework shall consist of the sum of dead and live vertical loads, and any horizontal loads. As a minimum, dead loads shall include the weight of the falsework and all construction material to be supported. The combined weight of concrete, reinforcing and prestressing steel and forms shall be assumed to be not less than 160 pounds per cubic foot of normal weight concrete or 130 pounds per cubic foot of lightweight concrete that is supported. Live loads shall consist of the actual weight of any equipment to be supported applied as concentrated loads at the points of contact and a uniform load of not less than 20 pounds per square foot applied over the area supported, plus 75 pounds per linear foot applied at the outside edge of deck overhangs. The horizontal load used for the design of the falsework bracing system shall be the sum of the horizontal loads due to equipment, construction

sequence, including unbalanced hydrostatic forces from fluid concrete, stream flow when applicable, and an allowance for wind. However, in no case shall the horizontal load to be resisted in any direction be less than 2 percent of the total dead load. For post-tensioned structures, tile falsework shall also be designed to support any increased or redistribution of loads caused by prestressing of the structure. Loads imposed by falsework onto existing, new or partially completed structures shall not exceed those permitted in Section "Application of Loads."

3.1.1.2 Foundations

Falsework shall be founded on a solid footing safe against undermining, protected from softening, and capable of supporting the loads imposed on it. When requested by the Contracting Officer, the Contractor shall demonstrate by suitable load tests that the soil bearing values assumed for the design of the falsework footings do not exceed the supporting capacity of the soil. Falsework which cannot be founded on a satisfactory footing shall be supported on piling which shall be spaced, driven, and removed in an approved manner.

3.1.1.3 Deflections

For cast-in-place concrete structures, the calculated deflection of falsework flexural members shall not exceed 1/240 of their span irrespective of the fact that the deflection may be compensated for by camber strips.

3.1.1.4 Clearances

Unless otherwise provided, the minimum dimensions of clear openings to be provided through falsework for roadways which are to remain open to traffic during construction shall be at least 5 feet greater than the width of the approach traveled way, measured between barriers when used, and 14 feet high, except that the minimum vertical clearance over interstate routes and freeways shall be 14.5 feet.

3.1.1.5 Construction

Falsework shall be constructed and set to grades which allow for its anticipated settlement and deflection, and for the vertical alignment and camber indicated on the plans or ordered by the Contracting Officer for the permanent structure. Variable depth camber strips shall be used between falsework beams and soffit forms to accomplish this when directed by the Contracting Officer. Suitable screw jacks, pairs of wedges or other devices shall be used at each post to adjust falsework to grade, to permit minor adjustments during the placement of con crete or structural steel should observed settlements deviate from those anticipated, and to allow for the gradual release of the falsework. Tell-tales attached to the forms and extending to the ground, or other means, shall be provided by the Contractor for accurate measurement of falsework settlement during the placing and curing of the concrete. Falsework or formwork for deck slabs on girder bridges shall be supported directly on the girders so that there will be no appreciable differential settlement during placing of the concrete. Girders shall be braced and tied to resist any forces that would cause rotation or torsion in the girders caused by the placing of concrete for diaphragms or deck. Welding of falsework support brackets or braces to structural steel members or reinforcing steel will

not be allowed unless specifically permitted.

3.1.2 Formwork Design and Construction

Forms shall be of wood, steel or other approved material and shall be mortar tight and of sufficient rigidity to prevent objectional distortion of the formed concrete surface due to pressure of the concrete and other loads incidental to the construction operations. Forms for concrete surfaces exposed to view shall produce a smooth surface of uniform texture and color substantially equal to that which would be obtained with the use of plywood conforming to the National Institute of Standards and Technology Product Standard PS I for Exterior B-B Class I Plywood. Panels lining such forms shall be arranged so that the joint lines form a symmetrical pattern conforming to the general lines of the structure. The same type of form lining material shall be used throughout each element of a structure. Such forms shall be sufficiently rigid so that the undulation of the concrete surface shall not exceed 1/8-inch when checked with a 5-foot-long straight edge or template. All sharp corners shall be filleted with approximately 3/4-inch chamfer strips. Concrete shall not be deposited in the forms until all work connected with constructing the forms has been completed, all debris has been removed, all materials to be embedded in the concrete have been placed for the unit to be cast, and the Contracting Officer has inspected the forms and materials.

3.1.2.1 Design

The structural design of formwork shall conform to ACI Standard, "Recommended Practice for Concrete Formwork," (ACI 347) or some other generally accepted standard. In selecting the hydrostatic pressure to be used in the design of forms, consideration shall be given to the maximum rate of concrete placement to be used, the effects of vibration, the temperature of the concrete and any expected use of set-retarding admixtures or pozzolanic materials in the concrete mix.

3.1.2.2 Construction

Forms shall be set and held true to the dimensions, lines and grades of the structure prior to and during the placement of concrete. Forms may be given a bevel or draft at projections, such as copings, to ensure easy removal. Prior to reuse, forms shall be cleaned, inspected for damage and, if necessary, repaired. When forms appear to be defective in any manner, either before or during the placement of concrete, the Contracting Officer may order the work stopped until defects have been corrected. Forms shall be treated with form oil or other approved release agent before the reinforcing steel is placed. Material which will adhere to or discolor the concrete shall not be used. Except as provided herein, metal ties or anchorages within the forms shall be so constructed as to permit their removal to a depth of at least one inch from the face without injury to the concrete. Ordinary wire ties may be used only when the concrete will not be exposed to view and where the concrete will not come in contact with salts or sulfates. Such wire ties, upon removal of the forms, shall be cut back at least 1/4 inch from the face of the concrete with chisels or nippers; for green concrete, nippers shall be used. Fittings for metal ties shall be of such design that, upon their removal, the cavities that are left will be of the smallest possible size. The cavities shall be filled with cement mortar and the surface

left sound, smooth, even, and uniform in color. When epoxy-coated reinforcing steel is required, all metal ties, anchorages or spreaders which will remain in the concrete shall be of corrosion resistant material or coated with a dielectric material. For narrow walls and columns, where the bottom of the form is inaccessible, an access opening shall be provided in the forms for cleaning out extraneous material immediately before placing the concrete.

3.1.2.3 Stay-in-Place Forms

Stay-in-place deck soffit forms, such as corrugated metal or precast concrete panels, may not be used.

3.1.3 Removal of Falsework and Forms

Falsework or forms shall not be removed without approval of the Contracting Officer. In the determination of the time for the removal of falsework and forms, consideration shall be given to the location and character of the structure, the weather, the materials used in the mix, and other conditions influencing the early strength of the concrete. Methods of removal likely to cause overstressing of the concrete or damage to its surface shall not be used. Supports shall be removed in such ;i manner as to permit the structure to uniformly and gradually take the stresses due to its own weight. For arch structures of two or more spans, the sequence of falsework release shall be as specified or approved.

3.1.3.1 Time of Removal

If field operations are not controlled by beam or cylinder tests, the following minimum periods of time, exclusive of days when the temperature is below 40 degrees F, shall have elapsed after placement of concrete before falsework is released or forms are removed:

Falsework for:	
Spans over 14 feet	14 days
Spans of 14 feet or less	10 days
Bent caps not yet supporting girders	10 days
Forms:	
Not supporting the dead weight of the concrete	24 hours
For interior cells of box girders and for railings	12 hours

If high early strength is obtained with Type Ill cement or by the use of additional cement, these periods may be reduced as directed. When field operations are controlled by cylinder tests, the removal of supporting forms or falsework shall not begin until the concrete is found to have the specified compressive strength, provided further that in no case shall supports be removed in less than 7 days after placing the concrete. In addition to the above time requirements:

a. Forms shall not be removed until the concrete has sufficient

strength to prevent damage to the surface. Falsework for post-tensioned portions of structures shall not be released until the prestressing steel has been tensioned. Falsework supporting any span of a continuous or rigid frame bridge shall not be released until the aforementioned requirements have been satisfied for all of the structural concrete in that span and in the adjacent portions of each adjoining span for a length equal to at least one-half the length of the span where falsework is to be released.

b. Unless otherwise specified or approved, falsework shall be released before the railings, copings or barriers are placed for all types of bridges. For arch bridges, the time of falsework release relative to the construction of elements of the bridge above the arch shall be as shown on the plans or directed by the Contracting Officer.

3.1.3.2 Extent of Removal

All falsework and forms shall be removed except:

a. Portions of driven falsework piles more than one foot below subgrade within roadbeds, or 2 feet below the original ground or finished grade outside of roadbeds, or 2 feet below the established limits of any navigation channel.

b. Footing forms where their removal would endanger the safety of cofferdams or other work.

c. Forms from enclosed cells where access is not provided.

d. Deck forms in the cells of box girder bridges that do not interfere with the future installation of utilities shown on the plans.

3.2 TEMPORARY WATER CONTROL SYSTEMS

Temporary water control systems consist of dikes, by-pass channels, flumes and other surface water diversion works, cut-off walls and pumping systems, including wellpoint and deep well systems, used to prevent water from entering excavations for structures.

3.2.1 Drawings

Working drawings for temporary water control systems, when required, shall include details of the design and the equipment, operating procedures to be employed, and location of point or points of discharge. The design and operation shall conform to all applicable water pollution control requirements.

3.2.2 Operations

Pumping from the interior of any foundation enclosure shall be done in such manner as to preclude the possibility of the movement of water through any fresh concrete. No pumping will be permitted during the placing of concrete or for a period of at least 24 hours thereafter, unless it be done from a suitable sump separated from the concrete work

by a watertight wall or other effective means subject to approval of the Contracting Officer. Pumping to unwater a sealed cofferdam shall not commence until the seal has set sufficiently to withstand the hydrostatic pressure. Pumping from wellpoints or deep wells shall be regulated so as to avoid damage by subsidence to adjacent property.

-- End of Section --

03210 REINFORCING STEEL

A. GENERAL: This work shall consist of furnishing and placing reinforcing steel of the shape, size and grade designated in the plans. Work shall conform to Section 706 and 710, Reinforcing Steel for Concrete Structures of the 1996 Missouri Standard Specifications for Highway Construction except as modified hereinafter. This section covers deformed reinforcing steel, wire ties, and bar supports. All reinforcing steel shall be Grade 60.

B. REFERENCES STANDARDS:

AMERICAN CONCRETE INSTITUTE (ACI) STANDARDS

ACI 315-95 Details and Detailing of Concrete Reinforcement

C. SUBMITTALS: The contractor shall submit the following items to the Contracting Officer for approval.

1. Shop Drawings: The Contractor shall submit shop drawings which include the following; reinforcement steel placement drawings; reinforcement steel schedules showing quantity, size, shape, dimensions, weight per foot, total weights and bending details; and details of bar supports showing types, sizes, spacing and sequence, SD04-GA-EC.

2. Test Reports: Certified tests reports of reinforcement steel showing that the steel complies with the applicable specifications shall be furnished for each steel shipment and identified with specific lots prior to placement. Three copies of the heat analyses shall be provided for each lot of steel furnished and the Contractor shall certify that the steel conforms to the heat analyses, SD09-GA-EC.

3. Certificates: Written certification for coating material and coated bars shall be submitted with the delivery of the bars, SD13-GA-EC.

D. MATERIAL:

1. Bar Supports: ACI 315. Supports for bars in concrete with formed surfaces exposed to view or to be painted shall be plastic-coated wire,

stainless steel or precast concrete supports. Precast concrete supports shall be wedge-shaped, not larger than 3-1/2 by 3-1/2 inches, of thickness equal to that indicated for concrete cover and have an embedded hooked tie-wire for anchorage.

2. Wire ties shall be 16-gauge or heavier black annealed wire.

3. Bar supports for epoxy-coated reinforcement shall be coated wire bar supports, bar supports made of dielectric material, or other acceptable materials. Wire bar supports shall be coated with dielectric material for a minimum distance of 2 inches from the point of contact with the epoxy-coated reinforcing bars. Reinforcing bars used as support bars shall be epoxy-coated. In walls having epoxy-coated reinforcing bars, spreader bars shall be epoxy-coated. Proprietary combination bar clips and spreaders used in walls with epoxy-coated reinforcing bars shall be made of corrosion-resistant material or coated with dielectric material.

4. Epoxy-coated reinforcement shall be fastened with nylon, epoxy, or plastic-coated tie wire.

E. PAYMENT: There shall be no separate payment for Reinforcing Steel but shall be subsidiary to related contract bid items.

SECTION 03311

CAST-IN-PLACE STRUCTURAL CONCRETE FOR CIVIL WORKS

PART 1 GENERAL

1.1 REFERENCES

The publications listed below form a part of this specification to the extent referenced. The publications are referred to in the text by basic designation only.

ACI INTERNATIONAL (ACI)

ACI 117/117R	(1990; Errata) Standard Tolerances for Concrete Construction and Materials
ACI 207	(1996) Mass Concrete
ACI 211.1	(1991) Standard Practice for Selecting Proportions for Normal, Heavyweight, and Mass Concrete
ACI 214	(1977; R 1997) Recommended Practice for Evaluation of Strength Test Results of Concrete
ACI 229	(1994) Controlled Low Strength Materials (CLSM)
ACI 303R	(1991) Guide to Cast-in-Place Architectural Concrete Practice
ACI 305R	(1999) Hot Weather Concreting
ACI 318/318R	(1992; Rev 1992; Errata) Building Code Requirements for Reinforced Concrete
ACI 318M/318RM	(1995) Building Code Requirements for Structural Concrete and Commentary (Metric)

AMERICAN SOCIETY FOR TESTING AND MATERIALS (ASTM)

ASTM C 31/C 31M	(2000) Making and Curing Concrete Test Specimens in the Field
ASTM C 33	(1999 ae1) Concrete Aggregates
ASTM C 39/C 39M	(1999) Compressive Strength of Cylindrical Concrete Specimens
ASTM C 40	(1999) Organic Impurities in Fine Aggregates for Concrete

ASTM C 42/C 42M	(1999) Obtaining and Testing Drilled Cores and Sawed Beams of Concrete
ASTM C 87	(1983; R 1995e1) Effect of Organic Impurities in Fine Aggregate on Strength of Mortar
ASTM C 94/C 94M	(2000) Ready-Mixed Concrete
ASTM C 117	(1995) Materials Finer Than 75 micrometer (No. 200) Sieve in Mineral Aggregates by Washing
ASTM C 123	(1998) Lightweight Particles in Aggregate
ASTM C 127	(1988; R 1993el) Specific Gravity and Absorption of Coarse Aggregate
ASTM C 128	(1997) Specific Gravity and Absorption of Fine Aggregate
ASTM C 131	(1996) Resistance to Degradation of Small-Size Coarse Aggregate by Abrasion and Impact in the Los Angeles Machine
ASTM C 136	(1996a) Sieve Analysis of Fine and Coarse Aggregates
ASTM C 142	(1978; R 1997) Clay Lumps and Friable Particles in Aggregates
ASTM C 143/C 143M	(2000) Slump of Hydraulic Cement Concrete
ASTM C 150	(1999a) Portland Cement
ASTM C 171	(1997a) Sheet Materials for Curing Concrete
ASTM C 172	(1999) Sampling Freshly Mixed Concrete
ASTM C 192/C 192M	(2000) Making and Curing Concrete Test Specimens in the Laboratory
ASTM C 231	(1997e1) Air Content of Freshly Mixed Concrete by the Pressure Method
ASTM C 260	(2000) Air-Entraining Admixtures for Concrete
ASTM C 295	(1998) Petrographic Examination of Aggregates for Concrete
ASTM C 309	(1998a) Liquid Membrane-Forming Compounds for Curing Concrete
ASTM C 441	(1997e1) Effectiveness of Mineral Admixtures or Ground Blast-Furnace Slag in Preventing Excessive Expansion of Concrete Due to the Alkali-Silica Reaction

ASTM C 494/C 494M	(1999a) Chemical Admixtures for Concrete
ASTM C 535	(1996e1) Resistance to Degradation of Large-Size Coarse Aggregate by Abrasion and Impact in the Los Angeles Machine
ASTM C 566	(1997) Total Evaporable Moisture Content of Aggregate by Drying
ASTM C 595	(2000a) Blended Hydraulic Cements
ASTM C 597	(1983; R 1997) Pulse Velocity Through Concrete
ASTM C 618	(2000) Coal Fly Ash and Raw or Calcined Natural Pozzolan for Use as a Mineral Admixture in Concrete
ASTM C 666	(1997) Resistance of Concrete to Rapid Freezing and Thawing
ASTM C 803/C 803M	(1997e1) Penetration Resistance of Hardened Concrete
ASTM C 805	(1997) Rebound Number of Hardened Concrete
ASTM C 881	(1999) Epoxy-Resin-Base Bonding Systems for Concrete
ASTM C 989	(1999) Ground Granulated Blast-Furnace Slag for Use in Concrete and Mortars
ASTM C 1017/C 1017M	(1998) Chemical Admixtures for Use in Producing Flowing Concrete
ASTM C 1059	(1999) Latex Agents for Bonding Fresh to Hardened Concrete
ASTM C 1064/C 1064M	(1999) Temperature of Freshly Mixed Portland Cement Concrete
ASTM C 1077	(1998) Laboratories Testing Concrete and Concrete Aggregates for Use in Construction and Criteria for Laboratory Evaluation
ASTM C 1107	(1999) Packaged Dry, Hydraulic-Cement Grout (Nonshrink)
ASTM C 1260	(1994) Potential Alkali Reactivity of Aggregates (Mortar-Bar Method)
ASTM D 75	(1987; R 1997) Sampling Aggregates
ASTM E 1155	(1996) Determining Floor Flatness and Levelness Using the F-Number System

ASTM E 1155M	(1996) Determining Floor Flatness and Levelness Using the F-Number System (Metric)

U.S. ARMY CORPS OF ENGINEERS (USACE)

COE CRD-C 94	(1995) Surface Retarders
COE CRD-C 100	(1975) Method of Sampling Concrete Aggregate and Aggregate Sources, and Selection of Material for Testing
COE CRD-C 104	(1980) Method of Calculation of the Fineness Modulus of Aggregate
COE CRD-C 114	(1997) Test Method for Soundness of Aggregates by Freezing and Thawing of Concrete Specimens
COE CRD-C 130	(1989) Scratch Hardness of Coarse Aggregate Particles
COE CRD-C 143	(1962) Specifications for Meters for Automatic Indication of Moisture in Fine Aggregate
COE CRD-C 318	(1979) Cloth, Burlap, Jute (or Kenaf)
COE CRD-C 400	(1963) Requirements for Water for Use in Mixing or Curing Concrete
COE CRD-C 521	(1981) Standard Test Method for Frequency and Amplitude of Vibrators for Concrete

CONCRETE INDUSTRY BOARD, INC. OF KANSAS CITY MID-WEST (MCIB)

Bulletin No. 20	Air Entraining Admixtures
Section 4	Materials-Fine Aggregate
Section 5	Concrete Mix Design Tables, Air Entrained Concrete
Section 8	Placing of Concrete
Section 9	Curing and Protection
Section 10	Cold Weather Concrete
Section 11	Hot Weather Concrete

MISSOURI HIGHWAY AND TRANSPORTATION COMMISSION. MISSOURI STANDARD SPECIFICATIONS FOR HIGHWAY CONSTRUCTION, 1996 EDITION.

NATIONAL INSTITUTE OF STANDARDS AND TECHNOLOGY (NIST)

NIST HB 44	(1997) NIST Handbook 44: Specifications, Tolerances, and Other Technical Requirements for Weighing and Measuring Devices

NATIONAL READY-MIXED CONCRETE ASSOCIATION (NRMCA)

NRMCA CPMB 100	(1996) Concrete Plant Standards

1.2 MEASUREMENT AND PAYMENT

No separate measurement or payment will be made for work covered under this Section and all costs shall be included in the contract unit or lump sum price for the item of work to which the materials and work is incidental.

1.3 SUBMITTALS

Item numbers within submittal packages shall be clearly identified. Information, including letters, test results, and certifications, shall be presented with headings relevant to this project.

Government approval is required for all submittals with a "GA" designation; submittals having an "FIO" designation are for information only. The following shall be submitted in accordance with Section, SUBMITTAL PROCEDURES.

SD-08 Statements

Concrete Mixture Proportioning ; GA-GD .

Requirements outlined in this paragraph shall be included in one transmittal. Concrete mixture proportions shall be determined by the Contractor, in accordance with the requirements in paragraphs, "MATERIALS" and "CONCRETE MIXTURE PROPORTIONING," and submitted for review. The concrete mixture quantities of all ingredients per cubicyard and nominal maximum coarse aggregate size that will be used in the manufacture of each quality of concrete shall be stated. Statements regarding cementious materials, aggregates, and chemical admixtures shall address all requirements specified. Proportions shall indicate the mass of cement, pozzolan and ground granulated blast-furnace (GGBF) slag, and water; the mass of fine and coarse aggregates in a saturated surface-dry condition; and the quantities of admixtures. The submission shall be accompanied by test reports from a laboratory complying with ASTM C 1077 which show that proportions thus selected will produce concrete of the qualities indicated. No substitution shall be made in the source or type of materials used in the work without additional tests to show that the quality of the new materials and concrete are satisfactory.

Non-Shrink Grout ; GA-GD .

Mixture proportions with laboratory report demonstrating compliance with specified requirements.

Flowable Backfill; GA-GD.

Mixture proportions with laboratory report demonstrating compliance with specified requirements.

Batch Plant ; GA-GD .

The Contractor shall submit batch plant data to the Contracting Officer for review for conformance with applicable specifications.

Concrete Mixers ; GA-EC .Capacity ; GA-GD.

The Contractor shall submit concrete mixer data which includes the make, type, and capacity of concrete mixers proposed for mixing concrete in conformance with the paragraphs, "CAPACITY" and "CONCRETE MIXERS."

Conveying Equipment and Methods; FIO-EC .

The conveying equipment and methods for transporting, handling, and depositing the concrete shall be submitted for review by the Contracting Officer for conformance with paragraphs, "CAPACITY" and "CONVEYING EQUIPMENT."

Placing Equipment and Methods; FIO-EC .

All placing equipment and methods shall be submitted for review by the Contracting Officer for conformance with paragraph, "CAPACITY."

Testing Technicians ; FIO-EC . Concrete Transportation Construction Inspector (CTCI) ; FIO-EC .

The Contractor shall submit statements that the concrete testing technicians and the concrete inspectors meet the requirements of paragraph, "TESTS AND INSPECTIONS."

Construction Joint Treatment ; GA-EC .

The method and equipment proposed for joint cleanup and waste disposal shall be submitted for review and approval for conformance with paragraph, "CONSTRUCTION JOINT TREATMENT."

Curing and Protection ; GA-EC .

The curing medium and methods to be used shall be submitted for review and approval for conformance with paragraph, "CURING AND PROTECTION."

Cold-Weather Placing ; GA-EC .

If concrete is to be placed under cold-weather conditions, the proposed materials, methods, and protection meeting the requirements of paragraph, "COLD-WEATHER PLACING" shall be submitted for approval.

Hot-Weather Placing ; GA-EC .

If concrete is to be placed under hot-weather conditions, the proposed materials and methods, meeting the requirements of paragraph, "HOT-WEATHER PLACING" and paragraph, "FINISHING," shall be submitted for review and approval.

The previous four submittals (Construction Joint Treatment, Curing and Protection, Cold-Weather Placing, and Hot-Weather Placing) shall be submitted in a single packet.

SD-09 Reports

Aggregate Quality ; GA-GD .

Aggregate quality tests shall be submitted at least 30 days prior to start of concrete placement, in accordance with paragraph, "QUALITY OF AGGREGATES."

Uniformity of Concrete Mixing ; GA-GD .

The results of the initial mixer uniformity tests as required in paragraph, "MIXER UNIFORMITY" shall be submitted at least 5 days prior to the initiation of placing.

Tests and Inspections ; GA-EC .

Test results and inspection reports shall be submitted daily and weekly as required in paragraph, "REPORTS."

SD-13 Certificates

All certificates shall be submitted in a single packet.

Cementitious Materials ; GA-GD

Cementitious Materials, including Cement and Pozzolan, and Ground Granulated Blast-Furnace Slag will be accepted on the basis of the manufacturer's certification of compliance, accompanied by mill test reports that materials meet the requirements of the specification under which they are furnished. Certification and mill test reports shall be from samples taken from the particular lot furnished. No cementitious materials shall be used until notice of acceptance has been given by the Contracting Officer. Cementitious materials will be subject to check testing from samples obtained at the source, at transfer points, or at the project site, as scheduled by the Contracting Officer, and such sampling will be by or under the supervision of the Government at its expense. Material not meeting specifications shall be promptly removed from the site of work.

Impervious-Sheet Curing Materials ; GA-EC

Impervious-Sheet Curing Materials shall be certified for compliance with all specification requirements.

Air-Entraining Admixture ; GA-GD

Air-Entraining Admixture shall be certified for compliance with all specification requirements.

Other Chemical Admixtures ; GA-GD

Other Chemical Admixtures shall be certified for compliance with all specification requirements.

Membrane-Forming Curing Compound ; GA-GD

Membrane-Forming Curing Compound shall be certified for compliance with all specification requirements.

Epoxy Resin ; GA-EC

Epoxy Resin Bonding Compound shall be certified for compliance with all specification requirements.

Nonshrink Grout ; GA-GD .

Descriptive literature of the Nonshrink Grout proposed for use shall be furnished together with a certificate from the manufacturer stating that it is suitable for the application or exposure for which it is being considered.

SD-14 Samples

Aggregates ; GA-EC .

Samples of materials for government verification testing and approval shall be submitted as required.

1.4 GOVERNMENT VERIFICATION TESTING AND SAMPLING

The Government may sample and test aggregates and concrete to determine compliance with the specifications. The Contractor shall provide facilities and labor as may be necessary for procurement of representative test samples. Samples of aggregates will be obtained at the point of batching in accordance with ASTM D 75. Concrete will be sampled in accordance with ASTM C 172.

1.4.1 Government Verification Sampling and Testing

1.4.1.1 Aggregates

The aggregate sources listed at the end of this section for aggregates have been previously tested and at the time testing was performed were capable of producing materials of a quality required for this project provided suitable processing is performed. Coarse aggregates shall be produced from Burlington Limestone, except for special aggregate concrete. Samples from the source of coarse aggregate and sources of fine aggregate selected by the Contractor, shall be taken under the supervision of the Contracting Officer in accordance with COE CRD-C 100 shall be delivered to the Corps of Engineer's Quality Control Laboratory for testing. Sampling and shipment of samples shall be at the Contractor's expense. Testing will be performed by and at the expense of the Government in accordance with the applicable COE CRD-C or ASTM test methods. If the Contractor selects more than one source

for each aggregate size or selects a substitute source for any size aggregate after the original source was tested, the cost of that additional testing will be borne by the Contractor. Tests to which aggregate may be subjected are listed in paragraph QUALITY. The material from the proposed source shall meet the quality requirements of this paragraph. Testing of aggregates by the Government does not relieve the Contractor of the requirements outlined in paragraph TESTS AND INSPECTIONS.

1.4.2 Construction Testing by the Government

Government Verification testing will be performed by and at the expense of the Government except as otherwise specified. The government may require duplicate samples for independent parallel quality assurance testing by the city. All testing and evaluations shall be coordinated with the contracting officer

1.4.2.1 Chemical Admixtures Storage

Chemical admixtures that have been in storage at the project site for longer than 6 months or that have been subjected to freezing shall be retested at the expense of the Contractor when directed by the Contracting Officer and shall be rejected if test results are not satisfactory. Chemical admixtures will be accepted based on compliance with the requirements of paragraph, "CHEMICAL ADMIXTURES."

1.4.2.2 Concrete Strength

Compressive strength verification test specimens will be made by the Government and cured in accordance with ASTM C 31 and tested in accordance with ASTM C 39. The strength of the concrete will be considered satisfactory so long as the average of all sets of three consecutive test results equals or exceeds the specified compressive strength f'c and no individual test result falls below the specified strength f'c by more than 500 psi. A "test" is defined as the average of two companion cylinders, or if only one cylinder is tested, the results of the single cylinder test. Additional analysis or testing, including nondestructive testing, taking cores and/or load tests may be required at the Contractor's expense when the strength of the concrete in the structure is considered potentially deficient.

a. Investigation of Low-Strength Test Results - When any strength test of standard-cured test cylinders falls below the specified strength requirement by more than 500 psi or if tests of field-cured cylinders indicate deficiencies in protection and curing, steps shall be taken to assure that the load-carrying capacity of the structure is not jeopardized. Nondestructive testing in accordance with ASTM C 597, ASTM C 803, or ASTM C 805 may be permitted by the Contracting Officer to estimate the relative strengths at various locations in the structure as an aid in evaluating concrete strength in place or for selecting areas to be cored. Such tests shall not be used as a basis for acceptance or rejection.

b. Testing of Cores - When the strength of concrete in place is considered potentially deficient, cores shall be obtained and tested in accordance with ASTM C 42. At least three representative cores shall be taken from each member or area of concrete in place that is considered potentially deficient. The location of cores will be determined by the

Contracting Officer to least impair the performance of the structure. Concrete in the area represented by the core testing will be considered adequate if the average strength of the cores is equal to at least 85 percent of the specified strength requirement and if no single core is less than 75 percent of the specified strength requirement.

c. Load Tests - If the core tests are inconclusive or impractical to obtain or if structural analysis does not confirm the safety of the structure, load tests may be directed by the Contracting Officer in accordance with the requirements of ACI 318/318R. Concrete work evaluated by structural analysis or by results of a load test shall be corrected in a manner satisfactory to the Contacting Officer. All investigations, testing, load tests, and correction of deficiencies will be performed and approved by the Contracting Officer at the expense of the Contractor, except that if all concrete is in compliance with the plans and specifications, the cost of investigations, testing, and load tests will be at the expense of the Government.

1.5 DESIGN REQUIREMENTS

1.5.1 Concrete Strength

Specified compressive strength f'c shall be as follows:

COMPRESSIVE STRENGTH (PSI)	STRUCTURE OR PORTION OF STRUCTURE
4,000 @ 28 days	For all work

Special aggregate concrete shall conform to the requirements herein and in MCIB, except as otherwise noted

1.5.2 Maximum Water-Cement (W/C) Ratio

Maximum W/C shall be 0.45 by mass for all work except special aggregate concrete. Maximum W/C for special aggregate concrete shall be 0.385 by mass. The W/C ratio may cause higher strengths than that required by paragraph "Concrete Strength" of this section.

1.6 CONSTRUCTION TOLERANCES

1.6.1 General

The definitions of the terms used in the following tables shall be as defined in ACI 117/117R. Level and grade tolerance measurements of slabs shall be made as soon as possible after finishing. When forms or shoring are used, the measurements shall be made prior to removal. Tolerances are not cumulative. The most restrictive tolerance controls. Tolerances shall not extend the structure beyond legal boundaries. Except as specified otherwise, plus tolerance increases the amount or dimension to which it applies, or raises a level alignment, and minus tolerance decreases the amount or dimension to which it applied, or lowers a level alignment. A tolerance without sign means plus or minus. Where only one signed tolerance is specified, there is no limit in the other direction. The application of the tolerances shall not be allowed to result in a reduction in the minimum required concrete clear cover over reinforcement or other metal embedment.

TOLERANCES FOR STRUCTURES (Includes Intakes)

(1) Vertical alignment

For heights 100 feet or less

Lines, surfaces, and arrises..... 1 in

Outside corner of exposed
corner columns and control
joint grooves in concrete
exposed. to view ..... 1/2 in

Sealing surfaces ..... 1/16 in

(2) Lateral alignment

In slabs, centerline location of
openings 12 inches or smaller
and edge location of larger openings ..... 1/2 in

Sawcuts, joints, and weakened
plane embedment in slabs ..... 3/4 in

Sealing surfaces ..... 1/16 in

(3) Level alignment
Top of slabs

Elevation of slabs-on-grade ..... 3/4 in

Lintels, parapets,
horizontal grooves, and other
lines exposed to view ..... 1/2 in

Sealing surfaces of sills and postwells.....1/16 in

(4) Cross-sectional dimensions
Members, such as abutments, postwells,
pedestals, walls (thickness
only), and slabs (thickness only)

12-in. dimension or less ..... +3/8 in
..... -1/4 in
More than 12 in. but not
over 3 ft. dimension .... +1/2 in
..... -3/8 in
Over 3 ft. dimension ..... +1 in
..... -3/4 in
Dimensions of unformed
members cast against soil
..... +3 in
..... -1/2 in

(5) Deviations from a planar surface measured with a 10-foot straight edge placed on high points:

General	3/8 in
Sealing surface	1/16 in

(6) The offset between adjacent pieces of formwork facing material shall not exceed:

Class A	1/8 in
Class B	1/4 in
Class C	1/2 in
Class D	1 in

TOLERANCES FOR TUNNEL LININGS, CONDUITS, PRECAST CONCRETE PIPE, FILLING AND EMPTYING CULVERTS AND INLET AND OUTLET STRUCTURES

(1) Lateral alignment

Centerline alignment

Water conveying, conduits, and culverts	1/2 in
Others	1 in

Inside dimensions ..... 0.005 times inside dimension

(2) Level alignment

Profile grade

Water conveying , conduits, and culverts	1/2in
Others	1 in

Surface of invert	1/4 in
Surface of side slope	1/2 in

(3) Cross-sectional dimension

Thickness at any point

Conduits	+5 percent thickness but not less than 1/2 in.
	-2.5 percent thickness but not less than 1/4 in.

1.6.2 Slabs on grade

Tolerances for finished surfaces of slabs on grade shall conform to the requirements specified herein. Measurements shall be accomplished along the alignment of each paving direction (slabs on grade) for gates, railroad crossings, and street pavements. The measurements in the transverse direction shall be accomplished at slab joints and at 5-foot intervals along the alignment. Measurements in the longitudinal direction shall be accomplished continuously along the alignment at the centerline and edges of each paving lane or row of slabs. Measurements shall be accomplished across joints in slabs on grade to determine gradual and abrupt variations in surface elevations across joints.

1.6.3 Appearance

Permanently exposed surfaces shall be cleaned, if stained or otherwise discolored, by a method that does not harm the concrete and that is approved by the Contracting Officer.

PART 2 PRODUCTS

2.1 MATERIALS

2.1.1 Cementitious Materials

Cementitious materials shall be portland cement, Portland-pozzolan cement, portland cement in combination with pozzolan or GGBF slag and shall conform to appropriate specifications listed below. Use of cementitious materials in architectural concrete shall be restricted to one color, one source, and one type.

2.1.1.1 Portland Cement

Portland cement shall conform to ASTM C 150, Type I or II, except that the maximum amount of C3A in Type I cement shall be limited to a maximum of 15 percent, Type I and II shall meet the low alkali requirement. The same types and source of Portland cement shall be used throughout the entire project. White Portland cement shall meet the above requirements, and may only be used when specifically approved in writing.

2.1.1.2 High-Early-Strength Portland Cement

ASTM C 150, Type III, with C3A limited to 8 percent, meeting the low alkali requirement may be used only when specifically approved in writing.

2.1.1.3 Pozzolan, Other than Silica Fume

Pozzolan shall conform to ASTM C 618, Class C or F, Tables 1 and 3, including the Supplementry Optional Chemical Requirements in Table 2 for available alkalies, and the Supplementary Optional Physical Reqirements in Table 4.

2.1.1.4 Ground Granulated Blast-Furnace Slag

Ground Granulated Blast-Furnace Slag shall conform to ASTM C 989, Grade 100 or 120.

2.1.1.5 Blended Hydraulic Cement

Portland Pozzolan cement shall conform to ASTM C 595, Type IP, meeting the mortar expansion requirement.

2.1.2 Aggregates

2.1.2.1 General

Concrete aggregates may be furnished from any source capable of meeting the quality requirements as stated in paragraph QUALITY. Coarse aggregates shall be produced from Burlington limestone, except for special aggregate concrete. The sources listed at the end of this section were previously evaluated and were found at that time capable of meeting the quality requirements when suitably processed. No guarantee is given or implied that any of the listed sources are currently capable of producing aggregates that meet the required quality stated in paragraph QUALITY. The listed sources are provided for information only. The contractor shall sample and test all selected aggregates for compliance with specified requirements herein. All sampling and testing (except as otherwise specified) is the contractor's responsibility and shall be accomplished by an approved commercial testing laboratory. Fine and coarse aggregates shall conform to the grading requirements of ASTM C 33, except special aggregate concrete shall conform to the grading requirements of MCIB. The nominal maximum size shall be as listed in paragraph NOMINAL MAXIMUM-SIZE COARSE AGGREGATE.

In addition to the grading limits in ASTM C 33, the fine aggregate, as delivered to the mixer shall have a fineness modulus of not less than 2.40 nor greater than 3.10. The grading of the fine aggregate shall also be controlled so that the fineness moduli of at least four of any five consecutive test samples of the fine aggregate as delivered to the mixer shall not vary more than 0.15 from the average fineness modulus of all samples taken during the first 30 days of concrete placement unless otherwise directed. The fineness modulus shall be determined by dividing by 100, the sum of the cumulative percentages retained on U.S. Standard Sieves Nos. 4, 8, 16, 30, 50, and 100. At the option of the Contractor, fine aggregate may be separated into two or more sizes or classifications, but the uniformity of grading of the separate sizes shall be controlled so that they may be combined throughout the job in fixed proportions established during the first 30 days of concrete placement.

2.1.2.2 Concrete Aggregate Sources

After the award of the contract, the Contractor shall designate in writing only one source or combination of sources from which he proposes to furnish each aggregate for all concrete. If the Contractor proposes to furnish aggregates from a source or from sources not listed at the end of this section, he may designate only a single source or single combination of sources for each aggregate. The contractor shall be responsible for sampling and testing the aggregates. All aggregates shall be tested for compliance with the specified requirements, and certified copies of laboratory test reports submitted for approval prior to the use of the aggregates in the work. If a source for coarse or fine aggregates so designated by the Contractor does not meet the quality requirements stated in paragraph QUALITY, the Contractor shall replace the source. The

contractor shall submit certified laboratory reports for the new source, showing compliance with the specified requirements prior to us in the work.

2.1.2.3 Quality

Fine aggregates shall conform to the aggregate quality requirements of ASTM C 33, except as modified herein. Coarse aggregates shall conform to the aggregate quality requirements of ASTM C 33, Class 5S, except as modified herein. Aggregate particles shall be sound and durable and free from objectionable coatings. Coarse agggregate shall not contain more than 0.5 percent by weight of white tripolitic chert that has a specific gravity, saturated surface dry, of less than 2.40. Tripolitic chert is the white porous siliceous form of weathered chert found in nodules and beds within some Burlington limestone sources. The total amount of all types of chert shall not exceed 3 percent by weight. To keep chert from exceeding these specified maximum limits, it may be necessary to employ selective quarrying to utilize the lesser cherty portions of the limestone deposit and to remove cherty particles by processing, loading, and handpicking from the quarried material before and during final processing into finished aggregate sizes.

All aggregates (including special aggregate concrete) shall have a specific gravity, saturated surface dry of not less than 2.60, and an absorption of not more than 2.0 percent, as determined by ASTM C 127and ASTM C 128. All aggregates shall be tested in accordance with ASTM C 1260 and shall have an expansion of less than 0.1 percent at 16 days.

In addition, aggregates delivered to the mixer shall meet the following requirements:

PROPERTY TEST	TEST LIMITS FINE AGGREGATE	TEST LIMITS COARSE AGGREGATE	
Durability Factor using (Procedure A)	Greater than 50	Greater than 50	COE CRD-C 114 ASTM C 666
Clay Lumps and Friable Particles	1	2	ASTM C 142
Material Finer than 75-m (No. 200) Sieve	3	1	ASTM C 117
Organic Impurities	Not darker than No. 3		ASTM C 40
	Not less than 95 percent		ASTM C 87
Test Limits L.A. Abrasion		40	ASTM C 131 ASTM C 535
Total Lignite	0.1		ASTM C 123
Total Chert, than less 2.40 specific gravity		0.5	ASTM C 123

Coal and Lignite, less than 2.00 specific gravity	0.25	0.25	ASTM C 123
Petrographic Examination	Presence and types of Chert, Coal, Lignite, Shale and Alkali-Silica reactive aggregates		ASTM C 295

2.1.2.4 Particle Shape

The shape of the particles in the fine aggregate and in the coarse aggregate shall be generally spherical or cubical. The quantity of flat and elongated particles in the separated size groups of coarse aggregate, as defined and determined by CE specification CRD-C 119 shall not exceed 25 percent in any size group.

2.1.3 Chemical Admixtures

Chemical admixtures to be used, when required or permitted, shall conform to the appropriate specification listed.

2.1.3.1 Air-Entraining Admixture

The air-entraining admixture shall conform to ASTM C 260 and shall consistently cause the concrete to have an air content in the specified ranges under field conditions.

2.1.3.2 Accelerating Admixture

Accelerators shall meet the requirements of ASTM C 494/C 494M, Type C or E, except that calcium chloride or admixtures containing calcium chloride shall not be used.

2.1.3.3 Water-Reducing or Retarding Admixture

a. Water-Reducing or Retarding Admixtures: ASTM C 494/C 494M, Type A, B, or D, except that the 6-month and 1-year compressive strength tests are waived.

b. High-Range Water Reducing Admixture: ASTM C 494/C 494M, Type F or G except that the 6-month and 1-year strength requirements shall be waived. The admixture may be used only when approved by the Contracting Officer, such approval being contingent upon particular mixture control as described in the Contractor's Quality Control Plan.

2.1.3.4 Other Chemical Admixtures

Other chemical admixtures for use in producing flowing concrete shall comply with ASTM C 1017/C 1017M, Type 1 or 2. These admixture shall be used only for concrete listed in paragraph SLUMP.

2.1.4 Curing Materials

2.1.4.1 Impervious-Sheet Curing Materials

Impervious-sheet curing materials shall conform to ASTM C 171, type optional, except polyethylene film shall not be used.

2.1.4.2 Membrane-Forming Curing Compound

The membrane-forming curing compound shall conform to ASTM C 309, Type 1-D or 2, except a styrene acrylate or chlorinated rubber compound meeting Class B requirements shall be used for surfaces that are to be painted or are to receive bituminous roofing, or waterproofing, or floors that are to receive adhesive applications of resilient flooring. The curing compound selected shall be compatible with any subsequent paint, roofing, coating, or flooring specified. Nonpigmented compound shall contain a fugitive dye and shall have the reflective requirements in ASTM C 309 waived.

2.1.4.3 Burlap

Burlap used for curing shall conform to COE CRD-C 318.

2.1.5 Water

Water for mixing and curing shall be fresh, clean, potable, and free of injurious amounts of oil, acid, salt, alkali, or organic compounds, except that nonpotable water may be used if it meets the requirements of COE CRD-C 400.

2.1.6 Nonshrink Grout

Nonshrink grout shall conform to ASTM C 1107 and shall be a commercial formulation suitable for the application proposed.

2.1.7 Flowable Backfill

Flowable backfill shall conform to State Specifications, Section 621 FLOWABLE BACKFILL. All ingredients used in the flowable backfill shall conform to the requirements herein.

2.1.8 Epoxy Resin

Epoxy resin for use in repairs shall conform to ASTM C 881, Type III, Grade I or II.

2.2 CONCRETE MIXTURE PROPORTIONING

2.2.1 Quality of Mixture

For each portion of the structure, mixture proportions shall be selected so that the strength and W/C requirements listed in paragraph DESIGN REQUIREMENTS are met.

2.2.2 Cement Content

Cement Content shall be measured by weight. Cement content per cubic yard of concrete shall be 564 pounds, minimum, for all work except special aggregate concrete. The cement content per cubic yard for special aggregate concrete shall conform to MCIB, and shall be at least 634 pounds, minimum.

2.2.3 Aggregate

The aggregate portion of the concrete mixtures shall contain at least 50 percent crushed Burlington limestone coarse aggregate, except for special aggregate concrete. Special aggregate concrete shall be from the special aggregate source list at the end of this specification.

2.2.4 Nominal Maximum-Size Coarse Aggregate

Nominal maximum-size coarse aggregate shall be 3/4 inch.

2.2.5 Air Content

Air content as delivered to the forms and as determined by ASTM C 231 shall be between 4-1/2 and 7-1/2 percent, except for special aggregate concrete. Special aggregate concrete shall be between 5 and 7 percent.

2.2.6 Slump

The slump shall be determined in accordance with ASTM C 143/C 143M and shall be within the range of 1 to 4 inch. Special aggregate concrete shall have a slump of 1 to 4 inches. Where placement by pump is approved, the slump shall not exceed 6 inches. The slump of pumped concrete shall be determined at the discharge side of the pump. Flowable backfill may contain a chemical admixture for use in producing a flowable concrete mixture in accordance with ASTM C 1017/C 1017M. The slump of flowable backfill shall not exceed 8-inches.

2.2.7 Concrete Proportioning

Trial batches and testing requirements for various qualities of concrete specified shall be the responsibility of the Contractor. Samples of aggregates shall be obtained in accordance with the requirements of ASTM D 75. Samples of materials other than aggregate shall be representative of those proposed for the project and shall be accompanied by the manufacturer's test reports indicating compliance with applicable specified requirements. Trial mixtures having proportions, consistencies, and air content suitable for the work shall be made based on methodology described in ACI 211.1, using at least three different water-cement ratios, which will produce a range of strength encompassing those required for the work. The maximum water-cement ratios required in paragraph MAXIMUM WATER-CEMENT RATIO will be converted to a weight ratio of water to cement plus pozzolan by mass, or GGBF slag by mass equivalency as described in ACI 211.1. In the case where GGBF slag is used, the weight of the slag shall be included in the equations for the term P, which is used to denote the mass of pozzolan. If pozzolan (Fly Ash)is used in the concrete mixture, the pozzolan content shall be 20 percent of the total cementitious material. Trial mixtures shall be proportioned for maximum permitted slump and air content with due consideration to the approved conveying and placement method. The temperature of concrete in each trial batch shall be reported. For each water-cement ratio, at least three test cylinders for each test age shall be made and cured in accordance with ASTM C 192/C 192M. They shall be tested at 7 days and at the design age specified in paragraph DESIGN REQUIREMENTS in accordance with ASTM C 39/C 39M. From these test results, a curve will be plotted showing the relationship between water-cement ratio and strength. Flowable backfill shall conform to the requirements herein for concrete and to state specifications section 621.

2.2.8 Required Average Compressive Strength

In meeting the strength requirements specified in paragraph CONCRETE STRENGTH, the selected mixture proportion shall produce a required average compressive strength f'cr exceeding the specified strength f'c by the amount indicated below.

2.2.8.1 Average Compressive Strength from Test Records

Where a concrete production facility has test records, a standard deviation shall be established in accordance with the applicable provisions of ACI 214. Test records from which a standard deviation is calculated shall represent materials, quality control procedures, and conditions similar to those expected, shall represent concrete produced to meet a specified strength or strengths (f'c) within 1,000 psi of that specified for proposed work, and shall consist of at least 30 consecutive tests. A strength test shall be the average of the strengths of two cylinders made from the same sample of concrete and tested at 28 days or at another test age designated for determination of f'c.

Required average compressive strength f'cr used as the basis for selection of concrete proportions shall be the larger of the equations that follow using the standard deviation as determined above:

$$f'cr = f'c + 1.34S$$
$$f'cr = f'c + 2.33S - 500$$

Where S = standard deviation

Where a concrete production facility does not have test records meeting the requirements above but does have a record based on 15 to 29 consecutive tests, a standard deviation shall be established as the product of the calculated standard deviation and a modification factor from the following table:

NUMBER OF TESTS*	MODIFICATION FACTOR FOR STANDARD DEVIATION
less than 15	Use tabulation in paragraph DETERMINING REQUIRED AVERAGE STRENGTH
15	1.16
20	1.08
25	1.03
30 or more	1.00

*Interpolate for intermediate numbers of tests.

2.2.8.2 Average Compressive Strength without Previous Test Records

When a concrete production facility does not have sufficient field strength test records for calculation of the standard deviation, the required average strength fcr shall be determined as follows:

If the specified compressive strength f'c is less than 3,000 psi,

$$f'cr = f'c + 1{,}000 \text{ psi}$$

If the specified compressive strength f'c is 3,000 to 5,000 psi,

$$f'cr = f'c + 1,200 \text{ psi}$$

If the specified compressive strength f'c is over 5,000 psi,

$$f'cr = f'c + 1,400 \text{ psi}$$

PART 3 EXECUTION

3.1 EQUIPMENT

3.1.1 Capacity

The batching, mixing, conveying, and placing equipment shall have a capacity of at least 40 cubic yards per hour.

3.1.2 Batch Plant

Batch plant shall conform to the requirements of NRMCA CPMB 100and as specified; however, rating plates attached to batch plant equipment are not required. The batch plant may be located on or off the project site.

3.1.2.1 Batching Equipment

The batching controls shall be semiautomatic or automatic. The semiautomatic batching system shall be provided with interlocks such that the discharge device cannot be actuated until the indicated material is within the applicable tolerance. The batching system shall be equipped with an accurate recorder or recorders that meet the requirements of NRMCA CPMB 100. Separate bins or compartments shall be provided for each size group of aggregate and cement, pozzolan, and GGBF slag. Aggregates shall be weighed either in separate weigh batchers with individual scales or cumulatively in one weigh batcher on one scale. Aggregate shall not be weighed in the same batcher with cement, pozzolan, or GGBF slag. If both cement and pozzolan or GGBF slag are used, they may be batched cumulatively provided that the portland cement is batched first. If measured by mass, the mass of the water shall not be weighed cumulatively with another ingredient. Water batcher filling and discharging valves shall be so interlocked that the discharge valve cannot be opened before the filling valve is fully closed. An accurate mechanical device for measuring and dispensing each admixture shall be provided. Each dispenser shall be interlocked with the batching and discharging operation of the water so that each admixture is separately batched and discharged automatically in a manner to obtain uniform distribution throughout the batch in the specified mixing period. Admixtures shall not be combined prior to introduction in water. The plant shall be arranged so as to facilitate the inspection of all operations at all times. Suitable facilities shall be provided for obtaining representative samples of aggregates from each bin or compartment. All filling ports for cementitious materials bins or silos shall be clearly marked with a permanent sign stating the contents.

3.1.2.2 Scales

The equipment for batching by mass shall conform to the applicable requirements of NIST HB 44, except that the accuracy shall be plus or minus

0.2 percent of scale capacity. The Contractor shall provide standard test weights and any other auxiliary equipment required for checking the operating performance of each scale or other measuring devices. Tests shall be made at the frequency required in paragraph TESTS AND INSPECTIONS, and in the presence of a government inspector.

3.1.2.3 Batching Tolerances

a. Weighing Tolerances

MATERIAL	PERCENT OF REQUIRED MASS
Cementitious materials	0 to plus 2
Aggregate	plus or minus 2
Water	plus or minus 1
Chemical admixture	0 to plus 6

b. Volumetric Tolerances - For volumetric batching equipment, the following tolerances shall apply to the required volume of material being batched:

Water: ..... Plus or minus 1 percent.
Chemical admixtures: ..... Zero to plus 6 percent.

3.1.2.4 Moisture Control

The plant shall be capable of ready adjustment to compensate for the varying moisture content of the aggregates and to change the masses of the materials being batched. An electric moisture meter complying with the provisions of COE CRD-C 143 shall be provided for measuring moisture in the fine aggregate. The sensing element shall be arranged so that the measurement is made near the batcher charging gate of the sand bin or in the sand batcher.

3.1.3 Concrete Mixers

The concrete mixers shall not be charged in excess of the capacity recommended by the manufacturer. The mixers shall be operated at the drum or mixing blade speed designated by the manufacturer. The mixers shall be maintained in satisfactory operating condition, and the mixer drums shall be kept free of hardened concrete. Should any mixer at any time produce unsatisfactory results, its use shall be promptly discontinued until it is repaired.

3.1.3.1 Stationary Mixers

Concrete plant mixers shall be tilting, nontilting, horizontal-shaft, vertical-shaft, or pugmill and shall be provided with an acceptable device to lock the discharge mechanism until the required mixing time has elapsed. The mixing time and uniformity shall conform to all the requirements in ASTM C 94/C 94M applicable to central-mixed concrete.

3.1.3.2 Truck Mixers

Truck mixers, the mixing of concrete therein, and concrete uniformity shall conform to the requirements of ASTM C 94/C 94M. A truck mixer may be used

either for complete mixing (transit-mixed) or to finish the partial mixing done in a stationary mixer (shrink-mixed). Each truck shall be equipped with two counters from which it will be possible to determine the number of revolutions at mixing speed and the number of revolutions at agitating speed.

3.1.4 Conveying Equipment

The conveying equipment shall conform to the following requirements.

3.1.4.1 Buckets

The interior hopper slope shall be not less than 58 degrees from the horizontal, the minimum dimension of the clear gate opening shall be at least five times the nominal maximum-size aggregate, and the area of the gate opening shall not be less than 2 square feet. The maximum dimension of the gate opening shall not be greater than twice the minimum dimension. The bucket gates shall be essentially grout tight when closed and may be manually, pneumatically, or hydraulically operated except that buckets larger than 2 cubic yards shall not be manually operated. The design of the bucket shall provide means for positive regulation of the amount and rate of deposit of concrete in each dumping position.

3.1.4.2 Transfer Hoppers

Concrete may be charged into nonagitating hoppers for transfer to other conveying devices. Transfer hoppers shall be capable of receiving concrete directly from delivery vehicles and have conical-shaped discharge features. The transfer hopper shall be equipped with a hydraulically operated gate and with a means of external vibration to effect complete discharge. Concrete shall not be held in nonagitating transfer hoppers more than 30 minutes.

3.1.4.3 Trucks

Truck mixers operating at agitating speed or truck agitators used for transporting plant-mixed concrete shall conform to the requirements of ASTM C 94/C 94M. Nonagitating equipment may be used for transporting plant-mixed concrete over a smooth road when the hauling time is less than 15 minutes. Bodies of nonagitating equipment shall be smooth, watertight, metal containers specifically designed to transport concrete, shaped with rounded corners to minimize segregation, and equipped with gates that will permit positive control of the discharge of the concrete.

3.1.4.4 Chutes

When concrete can be placed directly from a truck mixer, agitator, or nonagitating equipment, the chutes attached to this equipment by the manufacturer may be used. A discharge deflector shall be used when required by the Contracting Officer. Separate chutes and other similar equipment will not be permitted for conveying concrete.

3.1.4.5 Belt Conveyors

Belt conveyors shall be designed and operated to assure a uniform flow of concrete from mixer to final place of deposit without segregation of ingredients or loss of mortar and shall be provided with positive means for preventing segregation of the concrete at the transfer points and the point

of placing. Belt conveyors shall be constructed such that the idler spacing shall not exceed 36 inches. The belt speed shall be a minimum of 300 feet per minute and a maximum of 750 feet per minute. If concrete is to be placed through installed horizontal or sloping reinforcing bars, the conveyor shall discharge concrete into a pipe or elephant trunk that is long enough to extend through the reinforcing bars.

3.1.4.6 Concrete Pumps

Concrete may be conveyed by positive displacement pump when approved. The pumping equipment shall be piston or squeeze pressure. The pipeline shall be rigid steel pipe or heavy-duty flexible hose. The inside diameter of the pipe shall be at least three times the nominal maximum-size coarse aggregate in the concrete mixture to be pumped but not less than 4 inches. Aluminum pipe shall not be used.

3.1.5 Vibrators

Vibrators of the proper size, frequency, and amplitude shall be used for the type of work being performed in conformance with the following requirements:

APPLICATION	HEAD DIAMETER INCHES	FREQUENCY VPM	AMPLITUDE INCHES
Thin walls, beams, etc.	1-1/4 to 2-1/2	9,000 to 13,500	0.02 to 0.04
General construction	2 to 3-1/2	8,000 to 12,000	0.025 to 0.05

The frequency and amplitude shall be determined in accordance with COE CRD-C 521.

3.2 PREPARATION FOR PLACING

3.2.1 Embedded Items

Before placement of concrete, care shall be taken to determine that all embedded items are firmly and securely fastened in place as indicated on the drawings, or required. Embedded items shall be free of oil and other foreign matter such as loose coatings or rust, paint, and scale. The embedding of wood in concrete will be permitted only when specifically authorized or directed. Voids in sleeves, inserts, and anchor slots shall be filled temporarily with readily removable materials to prevent the entry of concrete into voids. Welding, including tack welding, will not be permitted on embedded metals within 2 feet of the surface of the concrete.

3.2.2 Concrete on Earth Foundations

Earth surfaces upon which concrete is to be placed shall be clean, damp, and free from debris, frost, ice, and standing or running water. Prior to placement of concrete, the earth foundation shall have been satisfactorily compacted in accordance with Section 02331 - EARTHWORK.

3.2.3 Concrete on Rock Foundations

Rock surfaces upon which concrete is to be placed shall be clean, free from oil, standing or running water, ice, mud, drummy rock, coating, debris, and loose, semidetached, or unsound fragments. Joints in rock shall be cleaned to a satisfactory depth, as determined by the Contracting Officer, and to

firm rock on the sides. Immediately before the concrete is placed, all rock surfaces shall be cleaned thoroughly by the use of air-water jets or sandblasting as described in paragraph CONSTRUCTION JOINT TREATMENT. All rock surfaces shall be kept continuously wet for at least 24 hours immediately prior to placing concrete thereon. All approximately horizontal surfaces shall be covered, immediately before the concrete is placed, with a layer of mortar proportioned similar to that in the concrete mixture. The mortar shall be covered with concrete before the time of initial setting of the mortar.

3.2.4 Construction Joint Treatment

Construction joint treatment shall conform to the following requirements.

3.2.4.1 Joint Preparation

Concrete surfaces to which additional concrete is to be bonded shall be prepared for receiving the next lift or adjacent concrete by cleaning with either air-water cutting, sandblasting, high-pressure water jet, or other approved method. Air-water cutting will not be permitted on formed surfaces or surfaces congested with reinforcing steel. Regardless of the method used, the resulting surfaces shall be free from all laitance and inferior concrete so that clean, well bonded coarse aggregate is exposed uniformly throughout the lift surface. The edges of the coarse aggregate shall not be undercut. The surface shall be washed clean again as the last operation prior to placing the next lift. There shall be no standing water on the surface upon which concrete is placed.

3.2.4.2 Air-Water Cutting

Air-water cutting of a construction joint shall be performed at the proper time and only on horizontal construction joints. The air pressure used in the jet shall be 90 to 110 psi, and the water pressure shall be just sufficient to bring the water into effective influence of the air pressure. When approved by the Contracting Officer, a retarder complying with the requirements of COE CRD-C 94 may be applied to the surface of the lift to prolong the period of time during which air-water cutting is effective. Prior to receiving approval, the Contractor shall furnish samples of the material to be used and shall demonstrate the method to be used in applications. After cutting, the surface shall be washed and rinsed as long as there is any trace of cloudiness of the wash water. Where necessary to remove accumulated laitance, coatings, stains, debris, and other foreign material, high-pressure water jet or sandblasting will be required as the last operation before placing the next lift.

3.2.4.3 High-Pressure Water Jet

A stream of water, under a pressure of not less than 3,000 psi, may be used for cleaning. Its use shall be delayed until the concrete is sufficiently hard so that only the surface skin or mortar is removed and there is no undercutting of coarse-aggregate particles. If the water jet is incapable of a satisfactory cleaning, the surface shall be cleaned by sandblasting.

3.2.4.4 Wet Sandblasting

This method may be used when the concrete has reached sufficient strength to prevent undercutting of the coarse aggregate particles. The surface of the concrete shall then be washed thoroughly to remove all loose materials.

3.2.4.5 Waste Disposal

The method used in disposing of waste water employed in cutting, washing, and rinsing of concrete surfaces shall be such that the waste water does not stain, discolor, or affect exposed surfaces of the structures, or damage the environment of the project area. The method of disposal shall be subject to approval.

3.3 PLACING

3.3.1 Placing Procedures

The surfaces of horizontal construction joints shall be kept continuously wet for the first 12 hours during the 24-hour period prior to placing concrete. Surfaces may be dampened immediately before placement if necessary. Concrete placement will not be permitted when, in the opinion of the Contracting Officer, weather conditions prevent proper placement and consolidation. Concrete shall be deposited as close as possible to its final position in the forms and, in so depositing, there shall be no vertical drop greater than 5 feet except where suitable equipment is provided to prevent segregation and where specifically authorized. Depositing of the concrete shall be so regulated that it may be effectively consolidated in horizontal layers 2.0 feet or less in thickness with a minimum of lateral movement. The amount deposited in each location shall be that which can be readily and thoroughly consolidated. Sufficient placing capacity shall be provided so that concrete placement can be kept plastic and free of cold joints while concrete is being placed. Concrete shall be placed by methods that will prevent segregation or loss of ingredients. Any concrete transferred from one conveying device to another shall be passed through a hopper that is conical in shape. The concrete shall not be dropped vertically more than 5 feet, except where a properly designed and sized elephant truck with rigid drop chute bottom section is provided to prevent segregation and where specifically authorized. In no case will concrete be discharged to free-fall through reinforcing bars.

3.3.2 Placement by Pump

When concrete is to be placed by pump, the nominal maximum-size coarse aggregate shall not be reduced to accommodate the pumps. The distance to be pumped shall not exceed limits recommended by the pump manufacturer. The concrete shall be supplied to the concrete pump continuously. When pumping is completed, concrete remaining in the pipeline shall be ejected without contamination of concrete in place. After each operation, equipment shall be thoroughly cleaned, and flushing water shall be wasted outside of the forms. Grout used to lubricate the pumping equipment at the beginning of the placement will not be incorporated into the placement.

3.3.3 Time Interval Between Mixing and Placing

Concrete shall be placed within 30 minutes after discharge into nonagitating equipment. When concrete is truck-mixed or when a truck mixer or agitator is used for transporting concrete mixed by a concrete plant mixer, the concrete shall be delivered to the site of the work, and discharge shall be

completed within 1-1/2 hours after introduction of the cement to the aggregates. When the length of haul makes it impossible to deliver truck-mixed concrete within these time limits, batching of cement and a portion of the mixing water shall be delayed until the truck mixer is at or near the construction site.

3.3.4 Cold-Weather Placing

When cold-weather placing of concrete is likely to be subjected to freezing temperatures before the expiration of the curing period, it shall be placed in accordance with procedures previously submitted in accordance with paragraph SUBMITTALS. The ambient temperature of the space adjacent to the concrete placement and surfaces to receive concrete shall be above 32 degrees F. The placing temperature of the concrete having a minimum dimension less than 12 inches shall be between 55 and 75 degrees F when measured in accordance with ASTM C 1064/C 1064M. The placing temperature of the concrete having a minimum dimension greater than 12 inches shall be between 50 and 70 degrees F. Heating of the mixing water or aggregates will be required to regulate the concrete-placing temperatures. Materials entering the mixer shall be free from ice, snow, or frozen lumps. Salt, chemicals, or other materials shall not be mixed with the concrete to prevent freezing. Concrete placements with a least dimension of 2.5 feet shall be protected from damaging thermal gradients and temperature conditions as recommended in ACI 207, except as otherwise specified or directed.

3.3.5 Hot-Weather Placing

Concrete shall be properly placed and finished with procedures previously submitted in accordance with paragraph SUBMITTALS. The concrete-placing temperature shall not exceed 85 degrees F when measured in accordance with ASTM C 1064/C 1064M. Cooling of the mixing water and aggregates, or both, may be required to obtain an adequate placing temperature. A retarder meeting the requirements of paragraph WATER-REDUCING OR RETARDING ADMIXTURES may be used to facilitate placing and finishing. Steel forms and reinforcement shall be cooled prior to concrete placement when steel temperatures are greater than 120 degrees F. Conveying and placing equipment shall be cooled if necessary to maintain proper concrete-placing temperature. Concrete palcements with a least dimension of 2.5 feet shall be protected from damaging thermal gradients and temperature conditions as recommended in ACI 207, except as otherwise specified or directed.

3.3.5.1 Large Placements

The concrete placing temperature, for placements with a least dimension of 2.5 feet shall be less than 70 degrees F. The temperature determination shall be made in the freshly placed concrete. Shaved ice may be used to replace a portion of the mixing water requirement on a direct weight substitution basis. Liquid nitrogen injection in the mixer may also be used. Methods of temperature control proposed for use in hot weather concreting shall be submitted for approval.

3.3.6 Consolidation

Immediately after placement, each layer of concrete, including Controlled Low Strength Material (CLSM) shall be consolidated by internal vibrating equipment. Vibrators shall not be used to transport concrete within the

forms. Hand spading may be required, if necessary, with internal vibrating along formed surfaces permanently exposed to view. Form or surface vibrators shall not be used unless specifically approved. The vibrator shall be inserted vertically at uniform spacing over the entire area of placement. The distance between insertions shall be approximately 1-1/2 times the radius of action of the vibrator. The vibrator shall penetrate rapidly to the bottom of the layer and at least 6 inches into the preceding unhardened layer if such exists. It shall be held stationary until the concrete is consolidated and then withdrawn slowly.

3.3.7 Placing Concrete Underwater

Concrete, used to seal the concrete caisions and other placements required in water, shall be deposited in water by a tremie or concrete pump. The methods and equipment used shall be subject to approval. Concrete buckets will not be permitted for underwater placement of concrete except to deliver concrete to the tremie. The tremie shall be watertight and sufficiently large to permit a free flow of concrete. The discharge end of the pump line or tremie shaft shall be kept continuously submerged in the concrete. The underwater seal shall be effected in a manner that will not produce undue turbulence in the water. The tremie shaft shall be kept full of concrete to a point well above the water surface. Placement shall proceed without interruption until the concrete has been brought to the required height. The tremie shall not be moved horizontally during a placing operation, and a sufficient number of tremies shall be provided so that the maximum horizontal flow will be limited to 15 feet.

3.4 FINISHING

The ambient temperature of spaces adjacent to surfaces being finished shall be not less than 40 degrees F. In hot weather when the rate of evaporation of surface moisture, as determined by use of Figure 2.1.5 of ACI 305R, may reasonably be expected to exceed 0.2 pounds per square foot per hour. Provisions for windbreaks, shading, fog spraying, or wet covering with a light-colored material shall be made in advance of placement, and such protective measures shall be taken as quickly as finishing operations will allow. All unformed surfaces that are not to be covered by additional concrete or backfill shall have a float finish. Additional finishing shall be as specified below and shall be true to the elevation shown in the drawings. Surfaces to receive additional concrete or backfill shall be brought to the elevation shown on the drawings and left true and regular. Exterior surfaces shall be sloped for drainage unless otherwise shown in the drawing or as directed. Joints shall be carefully made with a jointing or edging tool. The finished surfaces shall be protected from stains or abrasions. Grate tampers or jitterbugs shall not be used.

3.4.1 Unformed Surfaces

3.4.1.1 Float Finish

All unformed surfaces shall be screeded and darbied or bullfloated to bring the surface to the required finish level with no coarse aggregate visible. No water, cement, or mortar shall be added to the surface during the finishing operation. The concrete, while still green but sufficiently hardened to bear a man's weight without deep imprint, shall be floated to a true and even plane. Floating may be performed by use of suitable hand

floats or power-driven equipment. Hand floats shall be made of magnesium or aluminum.

3.4.1.2 Trowel Finish

A trowel finish shall be applied to unformed surfaces where indicated. Concrete surfaces shall be finished with a float finish, and after surface moisture has disappeared, the surface shall be troweled to a smooth, even, dense finish free from blemishes including trowel marks.

3.4.1.3 Broom Finish

A broom finish shall be applied as the final surface texturing for slabs on grade, which will be subject to vehicle or pedestrian traffic. The concrete surface shall be given a float finish. The floated surface shall be broomed with a fiber-bristle brush in a direction transverse to that of the main traffic

3.4.1.4 Wire-Comb Texturing

Surface texture transverse to the pavement centerline shall be applied using a mechanical wire comb drag. The comb shall be capable of traversing the full width of the pavement in a single pass at a uniform speed and with a uniform pressure. Successive passes of the comb shall be overlapped the minimum necessary to obtain a continuous and uniformly textured surface. The scores shall be 1/8 to 3/16 inch deep, 1/16 to 1/8 inch wide, and spaced 1/2 inch apart.

3.4.2 Formed Surfaces

Unless another finish is specified, surfaces shall be left with the texture imparted by the forms except that defective surfaces shall be repaired as described in paragraph FORMED SURFACE REPAIR. Unless painting of surfaces is required, uniform color of the concrete shall be maintained by use of only one mixture without changes in materials or proportions for any structure or portion of structure that is exposed to view or on which a special finish is required. The form panels used to produce the finish shall be orderly in arrangement, with joints between panels planned in approved relation to openings, building corners, and other architectural features. The finished surface of textured, tooled, and other archetectural finishes shall duplicate the preapproved sample panel. The sample panel shall be prepared in accordance with Section 03101 FORMWORK FOR CONCRETE. Forms shall not be reused if there is any evidence of surface wear or defects that would impair the quality of the surface.

3.4.2.1 Textured Finish

Textured finish shall be applied where specified or indicated, unless otherwise directed. This type of finish shall be applied where specified to conform to details shown in the drawings by use of approved textured form liners. Liner panels shall be secured in the forms by methods recommended by the manufacturer but not by methods that will permit impressions of nail heads, screw heads, washers, or the like to be imparted to the surface of the concrete. Edges of textured panels shall be sealed to each other to prevent grout leakage. The sealant used shall be nonstaining to the surface. The finish shall be similar to and shall closely match the finish on the sample panel.

3.4.2.2 Tooled Finish

Tooled finish shall be applied where specified or indicated, unless otherwise directed. The thoroughly cured concrete shall be dressed with electric, air, or hand tools to a uniform texture and shall be given a hand-tooled surface texture. The finish shall be similar to and shall closely match the finish on the sample panel.

3.4.3 Formed Surface Repair

After removal of forms, all ridges, lips, and bulges on surfaces permanently exposed shall be removed. All repairs shall be completed within 48 hours after form removal.

3.4.3.1 Class A Finish

Surfaces listed in Section 03101 FORMWORK FOR CONCRETE and as shown to have a class A finish shall have surface defects repaired as follows: defective areas, voids, and honeycombs smaller than 16 square inches in area and less than 1/2 inch deep and bug holes exceeding 1/2 inch in diameter shall be chipped and filled with dry-packed mortar. Holes left by removal of tie rods shall be reamed and filled with dry-packed mortar as specified in paragraph MATERIAL AND PROCEDURE FOR REPAIRS. Defective and unsound concrete areas larger than described shall be defined by 1/2 inch deep dovetailed saw cuts in a rectangular pattern with lines parallel to the formwork, the defective concrete removed by chipping, and the void repaired with replacement concrete. The prepared area shall be brush-coated with an epoxy resin meeting the requirements of paragraph EPOXY RESIN, or a neat cement grout after dampening the area with water. The void shall be filled with replacement concrete in accordance with paragraph MATERIAL AND PROCEDURE FOR REPAIRS.

3.4.3.2 Class C and Class D Finishes

Surfaces listed in Section 03101 FORMWORK FOR CONCRETE and as shown shall have defects repaired as follows: defective areas, voids, and honeycombs smaller than 24 square inches and less than 2 inches deep; bug holes exceeding 1-1/2 inches in diameter shall be chipped and filled with dry-packed mortar; and holes left by removal of the tie rods shall be chipped and filled with dry-packed mortar. Defective and unsound concrete areas larger than 24 square inches and deeper than 1-1/2 inches shall be defined by 1/2 inch deep dovetailed saw cuts in a rectangular pattern, the defective concrete removed by chipping, and the void repaired with replacement concrete. The prepared area shall be brush-coated with an epoxy resin meeting the requirements of paragraph EPOXY RESIN, or a neat cement grout after dampening the area with water. The void shall be filled with replacement concrete in accordance with paragraph MATERIAL AND PROCEDURE FOR REPAIRS.

3.4.3.3 Material and Procedure for Repairs

The cement used in the dry-packed mortar or replacement concrete shall be a blend of the cement used for production of project concrete and white portland cement properly proportioned so that the final color of the mortar or concrete will match adjacent concrete. Trial batches shall be used to determine the proportions required to match colors. Dry-packed mortar shall

consist of one part cement to two and one-half parts fine aggregate. The fine aggregate shall be that used for production of project concrete. The mortar shall be remixed over a period of at least 30 minutes without addition of water until it obtains the stiffest consistency that will permit placing. Mortar shall be thoroughly compacted into the prepared void by tamping, rodding, ramming, etc. and struck off to match adjacent concrete. Replacement concrete shall be produced using project materials and shall be proportioned by the Contracting Officer. It shall be thoroughly compacted into the prepared void by internal vibration, tamping, rodding, ramming, etc. and shall be struck off and finished to match adjacent concrete. Forms shall be used to confine the concrete. If an expanding agent is used in the repair concrete, the repair shall be thoroughly confined on all sides including the top surface. Metal tools shall not be used to finish permanently exposed surfaces. The repaired areas shall be cured for 7 days. The temperature of the in situ concrete, adjacent air, and replacement mortar or concrete shall be above 40 degrees F during placement, finishing, and curing. Other methods and materials for repair may be used only when approved in writing by the Contracting Officer. Repairs of the so called "plaster-type" will not be permitted.

3.5 CURING AND PROTECTION

3.5.1 Duration

All concrete shall be cured by an approved method. Curing effectiveness and methods shall be continuously maintained to ensure that concrete curing is uninterrupted for the entire curing period.

Concrete produced with Type I or III Portland cement shall be cured for at least 7 days.

Concrete containing Type II Portland cement, or fly ash shall be cured for at least 14 days.

Concrete containing GGBF slag shall be cured for at least 21 days.

Immediately after placement, concrete shall be protected from premature drying, extremes in temperatures, rapid temperature change, and mechanical damage. All materials and equipment needed for adequate curing and protection shall be available and at the placement site prior to the start of concrete placement. Concrete shall be protected from the damaging effects of rain for 12 hours and from flowing water for 14 days. No fire or excessive heat including welding shall be permitted near or in direct contact with concrete or concrete embedments at any time. Concrete placements with a least dimension of 2.5 feet shall be protected from damaging thermal gradients and temperature conditions as recommended in ACI 207, except as otherwise specified or directed.

3.5.2 Moist Curing

Moist-cured concrete shall be maintained continuously, not periodically, wet for the entire curing period. If water or curing materials stain or discolor concrete surfaces that are to be permanently exposed, they shall be cleaned as required in paragraph APPEARANCE. Where wooden form sheathing is left in place during curing, the sheathing shall be kept wet at all times. Where steel forms are left in place during curing, the forms shall be

carefully broken loose from the hardened concrete and curing water continuously applied into the void so as to continuously saturate the entire concrete surface. Horizontal surfaces may be moist cured by ponding, by covering with a minimum uniform thickness of 2 inches of continuously saturated sand, or by covering with saturated nonstaining burlap or cotton mats. Horizontal construction joints may be allowed to dry for 12 hours immediately prior to the placing of the following lift.

3.5.3 Membrane-Forming Curing Compound

Concrete may be cured with an approved membrane-forming curing compound in lieu of moist curing except that membrane curing will not be permitted on any surface to which a grout-cleaned finish is to be applied or other concrete is to be bonded, on any surface containing protruding steel reinforcement, on an abrasive aggregate finish, or any surface maintained at curing temperature by use of free steam. A styrene acrylate or chlorinated rubber compound may be used for surfaces that are to be painted or are to receive bituminous roofing or waterproofing, or for floors that are to receive adhesive applications of resilient flooring. The curing compound selected shall be compatible with any subsequent paint, roofing, waterproofing, or flooring specified.

3.5.3.1 Pigmented Curing Compound

A pigmented curing compound meeting the requirements of the above paragraph MEMBRANE-FORMING CURING COMPOUND may be used on surfaces that will not be exposed to view when the project is completed.

3.5.3.2 Nonpigmented Curing Compound

A nonpigmented curing compound containing a fugitive dye may be used on surfaces that will be exposed to view when the project is completed. Concrete cured with nonpigmented curing compound must be shaded from the sun for the first 3 days when the ambient temperature is 90 degrees F or higher.

3.5.3.3 Application

The curing compound shall be applied to formed surfaces immediately after the forms are removed and prior to any patching or other surface treatment except the cleaning of loose sand, mortar, and debris from the surface. The surfaces shall be thoroughly moistened with water, and the curing compound applied as soon as free water disappears. The curing compound shall be applied to unformed surfaces as soon as free water has disappeared and bleeding has stopped. The curing compound shall be applied in a two-coat continuous operation by approved motorized power-spraying equipment operating at a minimum pressure of 75 psi, at a uniform coverage of not more than 400 square feet per gallon for each coat, and the second coat shall be applied perpendicular to the first coat. Concrete surfaces that have been subjected to rainfall within 3 hours after curing compound has been applied shall be resprayed by the method and at the coverage specified. All concrete surfaces on which the curing compound has been applied shall be adequately protected for the duration of the entire curing period from pedestrian and vehicular traffic and from any other cause that will disrupt the continuity of the curing membrane.

3.5.4 Evaporation Retardant

Sheet curing shall not be used on vertical or near-vertical surfaces. All surfaces shall be thoroughly wetted and be completely covered with waterproof paper or polyethylene-coated burlap having the burlap thoroughly water-saturated before placing. Covering shall be laid with light-colored side up. Covering shall be lapped not less than 12 inches and securely weighted down or shall be lapped not less than 4 inches and taped to form a continuous cover with completely closed joints. The sheet shall be weighted to prevent displacement so that it remains in contact with the concrete during the specified length of curing. Coverings shall be folded down over exposed edges of slabs and secured by approved means. Sheets shall be immediately repaired or replaced if tears or holes appear during the curing period.

3.5.5 Cold-Weather Curing and Protection

When the daily outdoor low temperature is less than 32 degrees F, the temperature of the concrete shall be maintained above 40 degrees F for the first 7 days after placing. In addition, during the period of protection removal, the air temperature adjacent to the concrete surfaces shall be controlled so that concrete near the surface will not be subjected to a temperature differential of more than 25 degrees F as determined by observation of ambient and concrete temperatures indicated by suitable temperatures measuring devices furnished by the Government as required and installed adjacent to the concrete surface and 2 inches inside the surface of the concrete. The installation of the thermometers shall be made by the Contractor at such locations as may be directed.

3.5.6 Hot Weather Curing and Protection

WHEN THE RATE OF EVAPORATION OF SURFACE MOISTURE, AS DETERMINED BY USE OF FIG. 2.1.5 OF ACI 305, MAY REASONABLY BE EXPECTED TO EXCEED 0.2 POUNDS PER SQUARE FOOT PER HOUR, PROVISIONS FOR WINDBREAKS, SHADING, FOG SPRAYING, OR WET COVERING WITH A LIGHT COLORED MATERIAL SHALL BE MADE IN ADVANCE OF PLACEMENT, AND SUCH PROTECTIVE MEASURES SHALL BE TAKEN AS QUICKLY AS FINISHING OPERATIONS WILL ALLOW.3.6 SETTING OF BASE PLATES AND BEARING PLATES

3.6.1 Setting of Plates

After being plumbed and properly positioned, column base plates, bearing plates for beams and similar structural members, and machinery and equipment base plates shall be provided with full bearing with nonshrink grout. The space between the top of concrete or masonry-bearing surface and the bottom of the plate shall be approximately 1/24 of the width of the plate, but not less than 1/2 inch for plates less than 12 inches wide. Concrete surfaces shall be rough, clean, and free of oil, grease, and laitance, and they shall be damp. Metal surfaces shall be clean and free of oil, grease, and rust.

3.6.2 Nonshrink Grout Application

Nonshrink grout shall conform to the requirements of paragraph NONSHRINK GROUT. Water content shall be the minimum that will provide a flowable mixture and fill the space to be grouted without segregation, bleeding, or reduction of strength.

3.6.2.1 Mixing and Placing of Nonshrink Grout

Mixing and placing shall be in conformance with the material manufacturer's instructions and as specified. Ingredients shall be thoroughly dry-mixed before adding water. After adding water, the batch shall be mixed for 3 minutes. Batches shall be of size to allow continuous placement of freshly mixed grout. Grout not used within 30 minutes after mixing shall be discarded. The space between the top of the concrete or masonry-bearing surface and the plate shall be filled solid with the grout. Forms shall be of wood or other equally suitable material for retaining the grout and shall be removed after the grout has set. If grade "A" grout as specified in ASTM C 1107 is used, all surfaces shall be formed to provide restraint. The placed grout shall be worked to eliminate voids; however, overworking and breakdown of the initial set shall be avoided. Grout shall not be retempered or subjected to vibration from any source. Where clearances are unusually small, placement shall be under pressure with a grout pump. Temperature of the grout, and of surfaces receiving the grout, shall be maintained at 65 to 85 degrees F until after setting.

3.6.2.2 Treatment of Exposed Surfaces

After the grout has set, those types containing metallic aggregate shall have the exposed surfaces cut back 1 inch and immediately covered with a parge coat of mortar proportioned by mass of one part portland cement, two parts sand, and sufficient water to make the mixture placeable. The parge coat shall have a smooth, dense finish. The exposed surface of other types of nonshrink grout shall have a smooth, dense finish.

3.6.2.3 Curing

Grout and parge coats shall be cured in conformance with paragraph CURING AND PROTECTION.

3.7 TESTS AND INSPECTIONS

Tests and inspections shall conform to the following requirements.

3.7.1 General

The Contractor shall perform the inspections and tests described below, and, based upon the results of these inspections and tests, he shall take the action required and submit reports as required. When, in the opinion of the Contracting Officer, the concreting operation is out of control, concrete placement shall cease. The laboratory performing the tests shall conform with ASTM C 1077. The laboratory shall be located onsite. (An offsite laboratory may be used, subject to the approval of the Contracting Officer.) The individuals who sample and test concrete or the constituents of concrete as required in this specification shall have demonstrated a knowledge and ability to perform the necessary test procedures equivalent to the ACI minimum guidelines for certification of Concrete Field Testing Technicians, Grade I. The individuals who perform the inspection of concrete construction shall have demonstrated a knowledge and ability equivalent to the ACI minimum guidelines for certification of Concrete Transportation Construction Inspector (CTCI). The Government will inspect the laboratory, equipment, and test procedures prior to start of concreting operations and at least once per year thereafter for conformance with ASTM C 1077.

3.7.2 Testing and Inspection Requirements

3.7.2.1 Fine Aggregate

a. Grading - At least once during each shift when the concrete plant is operating, there shall be one sieve analysis and fineness modulus determination in accordance with ASTM C 136 and COE CRD-C 104 for the fine aggregate or for each size range of fine aggregate if it is batched in more than one size or classification. The location at which samples are taken may be selected by the Contractor as the most advantageous for control. However, the Contractor is responsible for delivering fine aggregate to the mixer within specification limits.

b. Corrective Action for Fine Aggregate Grading - When the amount passing on any sieve is outside the specification limits, the fine aggregate shall be immediately resampled and retested. If there is another failure on any sieve, the fact shall immediately be reported to the Contracting Officer.

c. Moisture Content Testing - When in the opinion of the Contracting Officer the electric moisture meter is not operating satisfactorily, there shall be at least four tests for moisture content in accordance with ASTM C 566 during each 8-hour period of mixing plant operation. The times for the tests shall be selected randomly within the 8-hour period. An additional test shall be made whenever the slump is shown to be out of control or excessive variation in workability is reported by the placing foreman. When the electric moisture meter is operating satisfactorily, at least two direct measurements of moisture content shall be made per week to check the calibration of the meter. The results of tests for moisture content shall be used to adjust the added water in the control of the batch plant.

d. Moisture Content Corrective Action - Whenever the moisture content of the fine aggregate changes by 0.5 percent or more, the scale settings for the fine-aggregate batcher and water batcher shall be adjusted (directly or by means of a moisture compensation device) if necessary to maintain the specified slump.

3.7.2.2 Coarse Aggregate

a. Grading - At least once during each consecutive 8 hours of operations in which the concrete plant is operating, there shall be a sieve analysis in accordance with ASTM C 136 for each size of coarse aggregate. The location at which samples are taken may be selected by the Contractor as the most advantageous for production control. However, the Contractor shall be responsible for delivering the aggregate to the mixer within specification limits. A test record of samples of aggregate taken at the same locations shall show the results of the current test as well as the average results of the five most recent tests including the current test. The Contractor may adopt limits for graduation control which are coarser than the specification limits for samples taken at locations other than as delivered to the mixer to allow for degradation during handling.

b. Corrective Action for Grading - When the amount passing any sieve is outside the specification limits, the coarse aggregate shall be immediately resampled and retested. If the second sample fails on any sieve, that fact shall be reported to the Contracting Officer. Where two consecutive averages of five tests are outside specification limits,

the operation shall be considered out of control and shall be reported to the Contracting Officer. Concreting shall be stopped and immediate steps shall be taken to correct the grading.

c. Coarse Aggregate Moisture Content - A test for moisture content of each size group of coarse aggregate shall be made at least twice per week. When two consecutive readings for smallest size coarse aggregate differ by more than 1.0 percent, frequency of testing shall be increased to that specified above for fine aggregate, until the difference falls below 1.0 percent.

d. Coarse Aggregate Moisture Corrective Action - Whenever the moisture content of any size of coarse aggregate changes by 0.5 percent or more, the scale setting for the coarse aggregate batcher and the water batcher shall be adjusted if necessary to maintain the specified slump.

3.7.2.3 Quality of Aggregates

a. Frequency of Quality Tests - Thirty days prior to the start of concrete placement the Contractor shall perform all tests for aggregate quality listed below. In addition, after the start of concrete placement, the Contractor shall perform tests for aggregate quality in accordance with the frequency schedule shown below. Samples tested after the start of concrete placement shall be taken immediately prior to entering the concrete mixer.

PROPERTY	FREQUENCY FINE AGGREGATE	FREQUENCY COARSE AGGREGATE	TEST
Specific Gravity	Every 3 months	Every 3 months	ASTM C 127 ASTM C 128
Absorption	Every 3 months	Every 3 months	ASTM C 127 ASTM C 128
Durability Factor Using, (Procedure A)	Every 12 months	Every 12 months	COE CRD-C 114 ASTM C 666
Alkali Reactivity	Every 3 months	Every 3 months	ASTM C 1260
Clay Lumps and Friable Particles	Every 3 months	Every 3 months	ASTM C 142
Material Finer than the 75-m (No. 200) Sieve	Not applicable	Every 3 months	ASTM C 117
Impurities	Every 3 months	Not applicable	ASTM C 40 ASTM C 87
L.A. Abrasion	Not applicable	Every 6 months	ASTM C 131 ASTM C 535

Petrographic Examination	Every 6 months	Every 6 months	ASTM C 295
Total Chert, than less 2.40 specific gravity	Every 6 months	Every 4 hours	ASTM C 123
Coal and Lignite, less than 2.00 gravity	Every 6 months	Every 6 months	ASTM C 123

b. Corrective Action for Aggregate Quality - If the result of a quality test fails to meet the requirements for quality immediately prior to start of concrete placement, production procedures or materials shall be changed and additional tests shall be performed until the material meets the quality requirements prior to proceeding with either mixture proportioning studies or starting concrete placement. After concrete placement commences, whenever the result of a test for quality fails the requirements, the test shall be rerun immediately. If the second test fails the quality requirement, the fact shall be reported to the Contracting Officer and immediate steps taken to rectify the situation.

3.7.2.4 Scales

a. Weighing Accuracy - The accuracy of the scales shall be checked by test weights prior to start of concrete operations and at least once every 3 months for conformance with the applicable requirements of paragraph BATCHING EQUIPMENT. Such tests shall also be made as directed whenever there are variations in properties of the fresh concrete that could result from batching errors.

b. Batching and Recording Accuracy - Once a week the accuracy of each batching and recording device shall be checked during a weighing operation by noting and recording the required weight, recorded weight, and the actual weight batched. The Contractor shall confirm that the calibration devices described in paragraph BATCH PLANT for checking the accuracy of dispensed admixtures are operating properly.

c. Scales Corrective Action - When either the weighing accuracy or batching accuracy does not comply with specification requirements, the plant shall not be operated until necessary adjustments or repairs have been made. Discrepancies in recording accuracies shall be corrected immediately.

3.7.2.5 Batch-Plant Control

The measurement of all constituent materials including cementitious materials, each size of aggregate, water, and admixtures shall be continuously controlled. The aggregate weights and amount of added water shall be adjusted as necessary to compensate for free moisture in the aggregates. The amount of air-entraining agent shall be adjusted to control air content within specified limits. A report shall be prepared indicating type and source of cement used, type and source of pozzolan or slag used, amount and source of admixtures used, aggregate source, the required aggregate and water weights per cubic yard, amount of water as free moisture

in each size of aggregate, and the batch aggregate and water weights per cubic yard for each class of concrete batched during plant operation.

3.7.2.6 Concrete Mixture

a. Air Content Testing - Air content tests shall be made when test specimens are fabricated. In addition, at least two tests for air content shall be made on randomly selected batches of each separate concrete mixture produced during each 8-hour period of concrete production. Additional tests shall be made when excessive variation in workability is reported by the placing foreman or Government quality assurance representative. Tests shall be made in accordance with ASTM C 231. Test results shall be plotted on control charts which shall at all times be readily available to the Government. Copies of the current control charts shall be kept in the field by the Contractor's quality control representatives and results plotted as tests are made. When a single test result reaches either the upper or lower action limit a second test shall immediately be made. The results of the two tests shall be averaged and this average used as the air content of the batch to plot on both the control chart for air content and the control chart for range, and for determining the need for any remedial action. The result of each test, or average as noted in the previous sentence, shall be plotted on a separate chart for each mixture on which an "average line" is set at the midpoint of the specified air content range from paragraph AIR CONTENT. An upper warning limit and a lower warning limit line shall be set 1.0 percentage point above and below the average line. An upper action limit and a lower action limit line shall be set 1.5 percentage points above and below the average line, respectively. The range between each two consecutive tests shall be plotted on a control chart for range where an upper warning limit is set at 2.0 percentage points and up upper action limit is set at 3.0 percentage points. Samples for air content may be taken at the mixer, however, the Contractor is responsible for delivering the concrete to the placement site at the stipulated air content. If the Contractor's materials or transportation methods cause air content loss between the mixer and the placement, correlation samples shall be taken at the placement site as required by the Contracting Officer and the air content at the mixer controlled as directed.

b. Air Content Corrective Action - Whenever points on the control chart for percent air reach either warning limit, an adjustment shall immediately be made in the amount of air-entraining admixture batched. As soon as is practical after each adjustment, another test shall be made to verify the result of the adjustment. Whenever a point on the control chart range reaches the warning limit, the admixture dispenser shall be recalibrated to ensure that it is operating accurately and with good reproducibility. Whenever a point on either control chart reaches an action limit line, the air content shall be considered out of control and the concreting operation shall immediately be halted until the air content is under control. Additional air content tests shall be made when concreting is restarted. All this shall be at no extra cost to the Government.

c. Slump Testing - In addition to slump tests which shall be made when test specimens are fabricated, at least four slump tests shall be made on randomly selected batches in accordance with ASTM C 143/C 143M for each separate concrete mixture produced during each 8-hour or less

period of concrete production each day. Also, additional tests shall be made when excessive variation in workability is reported by the placing foreman or Government's quality assurance representative. Test results shall be plotted on control charts which shall at all times be readily available to the Government. Copies of the current control charts shall be kept in the field by the Contractor's quality control representatives and results plotted as tests are made. When a single slump test reaches or goes beyond either the upper or lower action limit, a second test shall immediately be made on the same batch of concrete. The results of the two tests shall be averaged and this average used as the slump of the batch to plot on both the control chart for percent air and the chart for range, and for determining the need for any remedial action. An upper warning limit shall be set at 1/2 inch below the maximum allowable slump on separate control charts for percent air used for each type of mixture as specified in paragraph SLUMP, and an upper action limit line and lower action limit line shall be set at the maximum and minimum allowable slumps, respectively, as specified in the same paragraph. The range between each consecutive slump test for each type of mixture shall be plotted on a single control chart for range on which an upper action limit is set at 2 inches. Samples for slump shall be taken at the mixer, however, the Contractor is responsible for delivering the concrete to the placement site at the stipulated slump. If the Contractor's materials or transportation methods cause slump loss between mixer and the placement, correlation samples shall be taken at the placement site as required by the Contracting Officer and the slump at the mixer controlled as directed.

d. Slump Corrective Action - Whenever points on the control chart for slump reach the upper warning limit, an adjustment shall be immediately made in the batch weights of water and fine aggregate. The adjustments are to be made so that the total water content does not exceed that amount allowed by the maximum W/C specified, based upon aggregates which are in a saturated surface-dry condition. When a single slump reaches the upper or lower action limit, no further concrete shall be delivered to the placing site until proper adjustments have been made. Immediately after each adjustment, another test shall be made to verify the correctness of the adjustment. Whenever two consecutive slump tests, made during a period when there was no adjustment of batch weights, produce a point on the control chart for range at or above the upper action limit, the concreting operation shall immediately be halted and the Contractor shall take appropriate steps to bring the slump under control. Also, additional slump tests shall be made as directed. All this shall be at no additional cost to the Government.

e. Temperature - The temperature of the concrete shall be measured when compressive strength specimens are fabricated. Measurement shall be in accordance with ASTM C 1064/C 1064M. The temperature shall be reported along with the compressive strength data. During hot weather conditions, mass or large placements with a least dimension of 2.5 feet shall have a temperature meassurement made for each batch or delivery at the placement location, prior to placement.

f. Compressive-Strength Specimens - At least one set of test specimens shall be made each day on each different concrete mixture placed during the day. Additional sets of test cylinders shall be made, as directed by the Contracting Officer, when the mixture proportions are changed or when low strengths have been detected. A random sampling plan shall be

developed by the Contractor and approved by the Contracting Officer prior to the start of construction. The plan shall assure that sampling is done in a completely random and unbiased manner. A set of test specimens for concrete with a 28-day specified strength per paragraph DESIGN REQUIREMENTS shall consist of four cylinders, two to be tested at 7 days and two at 28 days. A set of test specimens for concrete with a 7-day strength per specified paragraph DESIGN REQUIREMENTS shall consist of six cylinders, two tested at 3 days, two at 7 days, and two at 28 days. Test specimens shall be molded and cured in accordance with ASTM C 31/C 31M and tested in accordance with ASTM C 39/C 39M. All compressive-strength tests shall be reported immediately to the Contracting Officer. Quality control charts shall be kept for individual strength tests, moving average for strength, and moving average for range for each mixture. The charts shall be similar to those found in ACI 214.

3.7.2.7 Inspection Before Placing

Foundation or construction joints, forms, and embedded items shall be inspected for quality by the Contractor in sufficient time prior to each concrete placement to certify to the Contracting Officer that they are ready to receive concrete. The results of each inspection shall be reported in writing.

3.7.2.8 Placing

a. Placing Inspection - The placing foreman shall supervise all placing operations, shall determine that the correct quality of concrete or grout is placed in each location as directed and shall be responsible for measuring and recording concrete temperatures and ambient temperature hourly during placing operations, weather conditions, time of placement, yardage placed, and method of placement.

b. Placing Corrective Action - The placing foreman shall not permit batching and placing to begin until he has verified that an adequate number of vibrators in working order and with competent operators are available. Placing shall not be continued if any pile of concrete is inadequately consolidated. If any batch of concrete fails to meet the temperature requirements, immediate steps shall be taken to improve temperature controls.

3.7.2.9 Vibrators

a. Vibrator Testing and Use - The frequency and amplitude of each vibrator shall be determined in accordance with COE CRD-C 521prior to initial use and at least once a month when concrete is being placed. Additional tests shall be made as directed when a vibrator does not appear to be adequately consolidating the concrete. The frequency shall be determined at the same time the vibrator is operating in concrete with the tachometer held against the upper end of the vibrator head while almost submerged and just before the vibrator is withdrawn from the concrete. The amplitude shall be determined with the head vibrating in air. Two measurements shall be taken, one near the tip and another near the upper end of the vibrator head and these results averaged. The make, model, type, and size of the vibrator and frequency and amplitude results shall be reported in writing.

b. Vibrator Corrective Action - Any vibrator not meeting the requirements of paragraph VIBRATORS shall be immediately removed from service and repaired or replaced.

3.7.2.10 Curing

a. Moist-Curing Inspections - At least once each shift, and once per day on nonwork days an inspection shall be made of all areas subject to moist curing. The surface moisture condition shall be noted and recorded.

b. Moist-Curing Corrective Action - When a daily inspection report lists an area of inadequate curing, immediate corrective action shall be taken, and the required curing period for such areas shall be extended by one (1) day.

c. Membrane-Curing Inspection - No curing compound shall be applied until the Contractor's authorized representative has verified that the compound is properly mixed and ready for spraying. At the end of each operation, he shall estimate the quantity of compound used by measurement of the container and the area of concrete surface covered and compute the rate of coverage in square feet per gallon. He shall note whether or not coverage is uniform.

d. Membrane-Curing Corrective Action - When the coverage rate of the curing compound is less than that specified or when the coverage is not uniform, the entire surface shall be sprayed again.

e. Sheet-Curing Inspection - At least once each shift and once per day on nonwork days, an inspection shall be made of all areas being cured using material sheets. The condition of the covering and the tightness of the laps and tapes shall be noted and recorded.

f. Sheet-Curing Corrective Action - When a daily inspection report lists any tears, holes, or laps or joints that are not completely closed, the tears and holes shall promptly be repaired or the sheets replaced, the joints closed, and the required curing period for those areas shall be extended by one (1) day.

3.7.2.11 Cold-Weather Protection and Sealed Insulation Curing

At least once each shift and once per day on nonwork days, an inspection shall be made of all areas subject to cold-weather protection. The protection system shall be inspected for holes, tears, unsealed joints, or other deficiencies that could result in damage to the concrete. Special attention shall be taken at edges, corners, and thin sections. Any deficiencies shall be noted, corrected, and reported.

3.7.2.12 Cold-Weather Protection Corrective Action

When a daily inspection report lists any holes, tears, unsealed joints, or other deficiencies, the deficiency shall be corrected immediately and the period of protection extended 1 day.

3.7.2.13 Mixer Uniformity

a. Stationary Mixers - Prior to the start of concrete placing and once every 6 months when concrete is being placed, or once for every 75,000 cubic yards of concrete placed, whichever results in the longest time interval, uniformity of concrete mixing shall be determined in accordance with ASTM C 94/C 94M.

b. Truck Mixers - Prior to the start of concrete placing and at least once every 6 months when concrete is being placed, uniformity of concrete shall be determined in accordance with ASTM C 94/C 94M. The truck mixers shall be selected randomly for testing. When satisfactory performance is found in one truck mixer, the performance of mixers of substantially the same design and condition of the blades may be regarded as satisfactory.

3.7.2.14 Mixer Uniformity Corrective Action

When a mixer fails to meet mixer uniformity requirements, either the mixer shall be removed from service on the work, the mixing time shall be increased, batching sequence changed, batch size reduced, or adjustments shall be made to the mixer until compliance is achieved.

3.7.3 Reports

All results of tests or inspections conducted shall be reported informally as they are completed and in writing daily. A weekly report shall be prepared for the updating of control charts covering the entire period from the start of the construction season through the current week. During periods of cold-weather protection, reports of pertinent temperatures shall be made daily. These requirements do not relieve the Contractor of the obligation to report certain failures immediately as required in preceding paragraphs. Such reports of failures and the action taken shall be confirmed in writing in the routine reports. The Contracting Officer has the right to examine all test and inspection records.

LIST OF COARSE AGGREGATE SOURCES

QUARRIES	COUNTY	STATE	GEOLOGICAL UNIT
LaFarge (Menefee) - Dresden Quarry Sec. 23, T.46N, R22W Sedalia, MO 816-826-0328	Pettis	MO	Burlington LS
Fischer Quarries Sec 17, T46, R21 Hughesville, MO 660-829-5555, 800-352-1517	Pettis	MO	Burlington LS
Hilty Quarries - Snyder QuarrY Sec. 16, T39N, R25W Clinton, MO	St. Clair	MO	Burlington LS

816-855-8135

Hilty Quarries
- Tightwad Quarry Benton MO Burlington LS
Sec. 3 & 34, T41N, R24W
Clinton, MO
816-855-8135

Hilty Quarries
- Warsaw North Quarry Benton MO Burlington LS
Sec. 15, T41N, R23W
Clinton, MO
816-855-8135

Hilty Quarries
- Warsaw South Quarry Benton MO Burlington LS
Sec. 4 T39N, R22W
Clinton, MO
816-855-8135

Ash Grove Aggregates
- Wheatland QRY Hickory MO Burlington LS
Sec. 2, T37N, R23W
Butler, MO
816-679-4128

LIST OF FINE AGGREGATE SOURCES

SOURCE	LOCATIONS	GEOLOGICAL UNIT
Commercial Producers	Kansas & Missouri Rivers	Natural Alluvial Sand

LIST OF COARSE SPECIAL AGGREGATE SOURCES (ABRASIVE)

SOURCE	LOCATIONS	GEOLOGICAL UNIT
Iron Mountain Trap Rock Co.,	Sec. 29, 30 & 31, T 35 N, R 4 E, St. Francois County, Iron Mountain, Missouri 63649	Felsite Porphyry
Concrete Materials Quarry	Sec. 18, T. 101 N., R. 49 W. Minnehaha County Sioux Falls, South Dakota	Sioux Quartzite
Dell Rapids Quarry L. G. Everist	Sec. 10, T 104 N, R 49 W, Minnehaha County Sioux Falls, South Dakota	Sioux Quartzite

LIST OF FINE SPECIAL AGGREGATE SOURCES (ABRASIVE)

SOURCE	LOCATIONS	GEOLOGICAL UNIT
Commercial Producers	Kaw Rivers**	Natural Alluvial Sand

** Fine special aggregate shall be 100 percent Kaw River Sand.

Sec 5, T52N, R21W

Listing of a source is not to be construed as approval of all material from the source. The right is reserved to reject materials from certain localized areas, zones, strata, or channels when such materials are unsuitable as determined by the Contracting Officer. A winter quarrying prohibition is in effect for this Contract.

Materials may be furnished from any of the above listed sources or, at the option of the Contractor, may be furnished from any other source designated by the Contractor and approved by the Contracting Officer.

-- End Of Section --

03312 MASONRY SEAL COATING AND GRAFFITI CONTROL

A. General: A masonry seal coat protection system is required for all exposed completed concrete masonry areas above roadway slabs including sidewalks, raised curbs, parapets and post areas. Masonry seal protection is also required for all exposed pier areas and for all exposed areas of mechanically stabilized earth walls.

After seal coat protection is installed, a graffiti protection system shall be applied to all areas specified above, unless otherwise specified by the engineer.

B. Seal Coat Protection Specifications: Provide a clear penetrating siloxane based sealer which is breathable and non-yellowing, with minimum 6.7% solids by volume. Subject to MHTD requirements, provide one of the following or an approved equal:

1. WeatherSeal Siloxane, ProSoCo, Inc.
2. Baracade Siloxane; Tamms Industries, Inc.
3. Klere-Seal 908-SX Siloxane, Pecora Corp.

Prior to application of sealer, including bulk purchase/delivery of products, prepare a minimum 12”x12” size application sample on each of the specified masonry products for the purpose of demonstrating final effect (visual and physical/chemical) of planned installation. Proceed with work only after the engineer’s acceptance of test application for color and chemical compatibility.

Clean substrate of substances which might interfere with penetration of adhesion of coatings. Test for moisture content, in accordance with the manufacturer’s instructions and recommendations.

Apply a heavy saturation spray coating of sealer on surfaces required for treatment using low pressure spray equipment. Comply with the manufacturer’s instructions and recommendations using an airless spraying procedure.

Apply a second saturation spray coating, repeating first application. Comply with the manufacturer’s instruction for limitations on drying time between coats and after rainstorm wetting of surfaces between coats.

C. Graffiti Control Specification: The anti-graffiti coating shall be a clear, single part, high solids protective coating formulated for application to exterior masonry surfaces, which is chemically compatible with the sealer coating to be used. Subject to compliance with MHTD requirements, provide the following:

PRO-SPEC Graffiti Control; Nova Chemical Corp.

The coating of required areas shall be applied in 2 coats of PRO-SPEC Graffiti Control – (Heavy), as manufactured by the Nova Chemical Corporation, North Kansas City, Mo.

Provide samples of anti-graffiti coating as described for sealer that will be used. Apply samples to all materials which have been treated with sealer coating.

Protect adjoining work from spillage or blow-over of coatings. Cover adjoining and nearby surfaces of where there is a possibility of coatings being deposited. Cover any live plant materials with drop cloths.

D. Application:

(a) Test panels must be applied before application.
(b) Areas must be clean and dry. Use in well ventilated areas.
(c) PRO-SPEC coating is flammable.
(d) Allow to dry at least 24 hours.
(e) Spray, brush or roller application is acceptable. Do not allow coating to run down. Apply to point of minimum absorption.
(f) Coverage can vary from 100-250 sq. ft. per gallon
(g) Temperature should be at least 50 degrees Fahrenheit before and after application.
(h) Clean all tools immediately with solvent.

E. Technical Data:

Solids: Standard	5%
Heavy	10%
Vehicle	Asphaltic Solvent
Penetration	1/8-1/4 inch
Flash Point	110 degrees F
Form	Water White
Appearance after Coating	May intensify natural color
Dry time for recoat	24 hours

F. Limitations: Do not dilute. Stir material periodically to assure proper distribution of resin to vehicle. Protect all non-masonry areas and beware of drift. Do not use sprayers with rubber hoses.

PRO-SPEC should not be applied until concrete has been allowed to dry cure for 60 days, according to the manufacturer's recommendation, or it will turn white in color.

G. Availability: Shipment available from local distribution or direct from Nova.

H. Warranty: Limited warranties are available on an individual job basis only.

I. Payment: Payment shall include full compensation for all materials, equipment, and labor and will be made under the contract unit prices for “Masonry Protection System” per lump sum and “Graffiti Protection System” per lump sum.

03330 AESTHETIC TREATMENT FOR RETAINING WALLS

A. GENERAL:

1. Related work specified elsewhere:

   (a) SECTION: PORTLAND CEMENT CONCRETE - STRUCTURES.
   (b) SECTION: FORMWORK FOR CONCRETE.
   (c) SECTION: REINFORCING STEEL.
   (d) SECTION: EPOXY COATED REINFORCING STEEL.

2. Architectural Concrete shall meet all the requirements of SECTION: PORTLAND CEMENT CONCRETE - STRUCTURES except as modified hereinafter.

3. Reference Standards:

   (a) American Society for Testing Materials (ASTM):

A 304-90	Specification for Alloy Steel Bars Subject to End-Quench Hardenability Requirements.

   (b) American Concrete Institute (ACI):

ACI 301	(1984) Structural Concrete for Buildings

   (c) U.S. ARMY CORPS OF ENGINEERS (USACE)

COE CRD-C 300	(1990) Specifications for Membrane-Forming Compounds for Curing Concrete

4. Evaluation and Acceptance: Test panels will be the basis for evaluation of the aesthetic treatment of the retaining walls.

B. MATERIALS:

1. Curing Materials: Membrane curing compound shall be clear with fugitive dye, conforming to the requirements of CRD C-300. The dye shall be clearly visible on the concrete surface for at least 4 hours after application, but shall become

inconspicuous within 7 days after application, when exposed to direct sunlight.

2. Form Ties:

(a) Steel form ties shall be snap ties with loose washers 15/16 inch in diameter made of 4 gage stainless steel meeting the requirements of ASTM A-304. Ties shall snap a minimum of 1-inch from the surface of the concrete.

(b) Fiberglass form ties shall be 0.500-inch diameter rod with a minimum ultimate tensile strength of 15,000 pounds.

3. Other form ties shall be soft monel or 18-8 stainless steel wire.

4. Form Release Agents: Form release agents shall be manufacturer's standard, nonstaining, nonpetroleum based, compatible with surface sealer finish coating.

5. Coarse aggregate, fine aggregate, cement, admixture and curing compound used in the concrete shall be from the same source (quarry, sand pit or manufacturing plant) for the entire project.

C. SPECIAL FORMING:

1. Formwork for architectural concrete shall be of the highest quality to obtain smooth, straight, non-yielding surfaces. Form system may be nonintrusive so as not to require any internal tie system or may use an internal tie system. Deflection shall not exceed 1/360th of each component span or distance between adjacent supports. Deflections and tolerance shall not be cumulative. Form lumber shall be of a resin overlay type or have a polyurethane or similar coating sufficiently heavy to prevent transfer of wood grain and to fill and cover boats (plugs) in plywood. All wood form joints shall be cleaned or release agent residue and then sealed with a 2" wide vinyl or polyester film tape to prevent leakage of mix water. A silicone sealant may be used for joint sealing. Form Liners shall be watertight. Holes in forms for snap ties shall not be larger than 9/16 inches for metal form ties and 5/8 inches for fiberglass ties. Formwork shall conform to ACI 301.

2. All vertical surfaces shall be cast to their full height between engineered horizontal joints. If possible, both external and internal vibrators should be used. Over-vibration shall be avoided. The heads of internal vibrators shall never touch the forms.

3. Surface Requirements: The surface requirements for the classes of finish required shall be as hereinafter specified. Allowable irregularities are designated "abrupt" or "gradual" for purposes of providing for surface variations. Offsets resulting from displaced, misplaced or mismatched forms, or sheathing, or by loose knots in sheathing, or other similar form defects, shall be considered "abrupt" irregularities. Irregularities resulting from warping, unplaneness or similar uniform variations from planeness, or true curvature, shall be considered "gradual" irregularities. "Gradual" irregularities shall be checked for compliance with the prescribed limits with a 5-foot template, consisting of a straightedge for plane surfaces and a shaped template for curved or warped surfaces. In measuring irregularities, the straight edge or template may be placed anywhere on the surface in any direction, with the testing edge held parallel to the intended surface.

	Irregularities	
	Abrupt, inches	Gradual, inches
Irregularities Limits	1/8	1/4

4. Curved Wall Forms: Forms for curved walls with radii of 15.0 feet or less shall be constructed as curves conforming to the face curvature shown on the drawings. For curved walls with the radii greater than 15.0 feet the forms may be constructed using cords of the wall face curvature shown on the drawings. Cord lengths permitted are shown below:

Maximum Allowable	
Radii, Feet	Cord Length, Feet
15 to 25	1
25 to 50	2
50 to 100	3
100 to 350	4
Greater than 350	8

Curved forms shall also meet the requirements of paragraph "Surface Requirements", paragraph C.3.

D. PATCHING: The material shall match the surface being patched to the satisfaction of the Engineer. The substrate shall be thoroughly moistened before patching. An acrylic concrete bonder shall be applied to the substrate and added to the patching mix. Prior to the performance of any job patching, the Contractor shall test patch the original sample panel and obtain color and texture approval from the Engineer for the patching procedure. Snap-tie holes shall not be patched. The quantity of patched areas shall be strictly limited. The combined total of patched areas shall not exceed 2 sq. ft. in each 1000 sq. ft. of the surface.

E. FINISHING: Surface shall be lightly sandblasted to remove minor form marks and colored residue resulting from water, cement, and migrating (bleeding toward the forms during concrete placement, as directed by the Contracting Officer.

G. TEST PANEL:

1. The Contractor shall construct a test panel for each form liner patterning specified with minimum dimensions of 4 feet by 8 feet by 6 inches thick. Panels shall be constructed with the 8-foot dimension in the vertical position.

2. The test panels shall be placed at a location designated by the Contracting Officer. The test panels shall be constructed and cured using the materials proposed for the project. Test panels shall not be protected from the effects of the sun while curing. The test panels will be used by the Engineer to approve compliance with the specification requirements for form material, form liner, appearance of any internal form tie system, form release agent, and final concrete mix design. When, in the opinion of the Contracting Officer, the test panels do not conform to the requirements herein, the Contractor shall construct additional test panels at no additional cost to the City until a final mix design has been developed that produces concrete conforming to requirements herein.

3. The approved test panel shall be placed on the job site near the wall construction. It shall be used for texturing quality control until the project is completed. Upon completion of the project the test panels will become the property of the Contractor.

H. PAYMENT: There shall be no separate payment for Aesthetic Treatment for Retaining Walls but shall be subsidiary to related contract bid items.

SECTION 03362 - MANHOLE CEMENTITIOUS LINER

PART 1 GENERAL

1.1 SECTION INCLUDES

A. Manhole lining

1.2 REFERENCES

A. ASTM C - 94 Specification for Ready-Mixed Concrete

B. ASTM C - 157 Test Method for Length Change of Hardened Hydraulic-Cement Mortar and Concrete

C. ASTM C - 293 Test Method for Flexural Strength of Concrete

D. ASTM C - 321 Test Method for Bond Strength of Chemical-Resistant Mortars

E. ASTM C - 495 Test Method for Compressive Strength of Lightweight Insulating Concrete

F. ASTM C - 496 Test Method for Splitting Tensile Strength of Cylindrical Concrete Specimens

G. ASTM C - 579B Test Method for Compressive Strength of Chemical-Resistant Mortars, Grouts, and Monolithic Surfacings

1.3 SYSTEM DESCRIPTION

A. Manhole lining under this specification shall govern all work, materials, and equipment required for the following:

1. Substrate rehabilitation for the purpose of eliminating infiltration, providing corrosion protection, repair of voids, and restoration of the structural integrity of the substrate as a result of the applying a monolithic fiber-reinforced structural/structurally enhanced cementitious liner to the wall and the bench surfaces of brick, concrete, or any other masonry construction material.

B. Manhole lining shall be applied by an applicator who is approved and trained by the manufacturer of the lining system materials. All aspects of the installation shall be in accordance with the manufacturers recommended and per the following specification.

C. Manhole lining as referred to on the Drawings and specified herein shall include:

1. the removal of any loose unsound materials.
2. cleaning of the area to be sprayed with high pressure water.
3. the repair and filling of voids.
4. the repair and sealing of the pipe seals, pipe invert, and benches.
5. the elimination of active infiltration prior to making the application.
6. the spray application of a cementitious mix to form a structural/structurally enhanced monolithic liner.

1.4 SUBMITTALS

A. Submit under provisions of Section 01300.

B. Work Plan: Prior to the pre-construction conference, the Contractor shall submit a work plan for review and acceptance by the Engineer. The following items shall be addressed in the work plan, as a minimum:

a. Written description of construction procedures, including bypassing of sewage flow and reconnection of service laterals.

b. The locations, dimensions, and number of equipment staging areas and working areas.

c. Product data for review by Engineer. Provide data indicating manhole lining products.

C. Manhole rehabilitation product testing reports.

D. Manhole acceptance testing reports

1.5 QUALITY ASSURANCE

A. Perform Work in accordance with manufacturer's instructions.

1.6 QUALIFICATIONS

A. Manufacturer: Company specializing in manufacturing the products specified in this Section with minimum three years documented experience.

1.7 FIELD MEASUREMENTS

A. Verify that field measurements are as indicated on shop drawings.

PART 2 PRODUCTS

2.1 MANHOLE LINING PRODUCTS: Products shall be manufactured by Strong-Seal Systems Corps., Pine Bluff, Arkansas, Permacast Products of Johnson, Iowa, Quadex of Orlando, Florida, Master Builders Technologies of Cleveland, Ohio, or approved equal. Labor, equipment, and materials, including the machinery specially designed for the application, shall be provided by the applicator.

A. PATCHING MATERIAL: A quick setting corrosion resistant cementitious material shall be a used as a patching material, and is to be mixed and applied according to manufacturer's recommendations, and shall have the following minimum requirements:

1. Compressive Strength	ASTM C579B	1,400 psi, 6 hrs.
2. Bond	ASTM C321	1,000psi, 24 hrs.
3. Applied Density		120 lbs ± 5 lbs pcf
4. Shrinkage	ASTM C157	0% at 90% R.H.

Patching material shall equal or exceed requirements for the liner material.

B. INFILTRATION CONTROL MATERIAL: A rapid setting cementitious product, specifically formulated for leak control, shall be used to stop minor water infiltration and shall be mixed and applied according to the manufacturer's recommendations and shall have the following minimum requirements:

1. Compressive Strength	ASTM C579B	600 psi, 1 hr. 1,000 psi, 24 hrs.

2. Bond ASTM C321 30 psi, 1hr.
80 psi, 24 hrs.

Strong Seal "Strong-Plug" or Engineer approved equal.

C. GROUTING MATERIAL

1. A cementitious grout shall be used for stopping very active infiltration and filling voids, and shall be mixed and applied according to manufacturer's recommendations. The cementitious grout shall be volume stable, and have a minimum twenty-eight (28) day compressive strength of 250 psi and a one (1) day compressive strength of 50 psi.

   Strong-Seal "Grout 250" or Engineer approved equal.

2. A cementitious grout shall be used for the same application as Grout 250, but is designed for special soil conditions, and shall be used per manufacturer's recommendations. The cementitious grout shall be volume stable, and have a minimum twenty-eight (28) day compressive strength of 1,000 psi.

   Strong-Seal "Grout 1000" or Engineer approved equal.

3. Chemical grouts may be used for stopping very active infiltration and shall be mixed and applied per manufacturer's recommendations.

D. LINER MATERIAL: A cementitious product shall be used to form a structural/structurally enhanced monolithic liner covering all interior substrate surfaces. The liner material shall be applied with machinery specially designed for the application, and shall have the following minimum requirements at twenty-eight (28) days:

Compressive Strength	ASTM C495	>3000 psi
Tensile Strength	ASTM C496	>300 psi
Flexural Strength	ASTM C293	>600 psi
Shrinkage @ 90% R.H.	ASTM C596	0%
Bond	ASTM C321	>130 psi
Density, when applied		105 pcf

1. Liner material shall be one of the following products:

a. Strong-Seal ® MS-2A, Permacast MS-10,000 or approved equal shall be made with Type I or Type III Portland Cement and shall be used according to manufacturer's recommendations in applications where there is no, or very mild, sulfide conditions (pH 3.0 or higher)

b. Strong-Seal ® MS-2C, Permacast CR-5,000 or approved equal shall be made with Calcium Aluminate Cement and shall be used according to manufacturer's recommendations in applications where there is evidence of severe sulfide conditions (pH 2.0 or higher).

c. Strong-Seal ® Sewpercoat ® PG, Permacast MS-10,000 or approved equal with ConShield shall be made with calcium aluminate cement and calcium aluminate aggregate and shall be used per manufacturer's recommendations in any harsh hydrogen sulfide conditions regardless of surface pH, as long as environment is in a municipal sanitary system. Refer to Sewpercoat ® PG specifications for physical properties and application procedures.

E. WATER: Water used to mix product shall be clean and potable. A laboratory shall test questionable water in accordance per ASTM C-94 procedure. Potable water need not be tested.

F. OTHER MATERIALS: No other material shall be used with the mixes described above without prior approval or recommendation of the Engineer.

PART 3 EXECUTION

3.1 MANHOLE LINING:

A. Equipment Application equipment shall be as recommended by materials manufacturer.

B. Application:

1. Preparation:

a. Place covers over invert to prevent extraneous material from entering the sewer lines.

b. All foreign material shall be removed from the manhole wall and bench using a high pressure water spray (minimum 2,500 psi). Loose and protruding brick, mortar, and concrete shall be removed using a mason's hammer and chisel and/or scraper. Fill any large voids with patching material as specified herein. The surface to be repaired must be clean and free of any loose materials with walls totally saturated with water.

c. Active leaks shall be stopped using infiltration control material according to manufacturer's recommendations. Some leaks may require weep holes to localize the infiltration during the application. After application, the weep holes shall be plugged with infiltration control material prior to the application of the final coat. When severe infiltration exists, drilling may be required in order to pressure grout using a cementitious grout or chemical grout, as specified herein for grouting material. Manufacturer's recommendations shall be followed when pressure grouting is required.

d. All manhole steps shall be removed and the wall repaired prior to lining.

2. Invert, pipe seal, and bench repair:

a. After all preparations have been completed, remove all loose material and wash wall again.

b. Any bench, invert, pipe seal and/or service line repairs shall be made at this time using patching material and shall be used per manufacturer's recommendations.

c. Invert repair shall be performed on all inverts with visible damage or where infiltration is present, or when vacuum testing is specified. After blocking through the manhole, and thoroughly cleaning invert, the patching material shall be applied to the invert in an expeditious manner. The material shall be troweled uniformly onto the damaged invert at a minimum thickness of ½ inch at the invert extending out onto the bench of the manhole sufficiently to tie into the structural/structurally enhanced monolithic liner to be applied. The finished invert surfaces shall be smooth and free of ridges. The flow may be reestablished in the manhole within thirty (30) minutes after placement of the material.

3. Mixing: Mixing shall be done in strict accordance with the material manufacturer's instructions.

4. Spraying: On all manholes, a double application of the liner mix shall be spray applied to a total thickness of ½ inch in two application.

a. The surface shall be clean and free of all foreign material and shall be damp without noticeable free water droplets or running water, but totally saturated, just prior to application. Materials shall be spray applied from the bottom of the wall to the top, to a minimum uniform thickness to insure that all cracks, crevices, and voids are filled and a relatively smooth surface remains after light troweling. The light troweling is performed to compact the material into voids and to set the bond.

b. Bench application: The wooden covers shall be removed at this time and the bench sprayed with materials mixed as specified in Part 2 and spray applied in such a manner that a gradual slope is produced from the walls to the invert with the thickness at the edge of the invert to be no less than 1 inch. The wall/bench intersection shall be rounded to a uniform radius the full circumference of the intersection.

C. Curing:

1. Care should be taken to minimize exposure of applied product to sunlight and air movement. At no time should the finished product be exposed to sunlight or air movement for longer than fifteen (15) minutes before covering or closing access. In extremely hot and arid climates, manhole should be shaded while application is in process. Contact manufacturer for curing compound recommendations.

a. The application shall have a minimum of four (4) hours cure time before being subjected to active flow.

b. For traffic areas, calcium aluminate based products shall be used. Traffic shall be deferred for a maximum of six (6) hours.

D. Weather: No application shall be made to frozen surfaces or if freezing is expected to occur within the substrate within twenty-four (24) hours after application. If ambient temperatures are in excess of 95 degrees F, precautions shall be taken to keep the mix temperature at time of application below 90 degrees F. Mix water temperature shall not exceed 85 degrees F. Chill with ice if necessary.

E. Product Testing: Four specimens shall be cast each day or from every fifty (50) bags of product used and shall be properly packaged, labeled, and returned to manufacturer for testing in accordance with the Owner's or manufacturer's directions for compression strength testing as described in ASTM C495.

F. Acceptance Testing: Contractor shall test rehabilitated manholes as follows:

1. Visually verify the absence of leaks. Visible leaks shall be corrected immediately.

2. Vacuum tests in accordance with Section 02702 - Sewer Pipe and Manhole Testing shall be conducted on all manholes.

End of Section.

SECTION 03370 - SEWER MANHOLE CONSTRUCTION

1. SCOPE. This section covers standard sewer manholes. Standard manholes shall be constructed complete with covers, fittings, and other appurtenances, in accordance with the details indicated on the Figures at the end of this section.

2. GENERAL. At the option of the Contractor, standard manholes may be constructed with cast-in-place bases or pre-cast concrete (developed) bases as indicated on the Figures at the end of this section.

3. MATERIALS.

3.01. Non-shrinking Grout. Non-shrink grout shall be in the plastic state and show no expansion after set as tested in accordance with ASTM C827 and shall develop compressive strength not less than three thousand (3,000) psi with a trowelable mix within twenty-four (24) hours per ASTM C109. The placement time shall be not less than forty-five (45) minutes based on initial set per ASTM C191. Cormix "Supreme", L&M "Crystex", Master Builders "Masterflow 713 Grout" or "Set Grout", Sauereisen Cements "F-100 Level Fill Grout", UPCO "Upcon Super Flow", or U.S. Grout "Five Star Grout".

3.02. Cast-in-Place Concrete. Materials, handling, forms, finishing, curing, and other work as specified in the concrete sections.

a) Class A concrete used for aerial crossing piers, wetwell walls, manhole walls, bases, inverts, and flat slabs shall have a 28-day strength of 4000 psi, unless otherwise specified.

b) Class B concrete used for concrete encasements and embedments, thrust blocks, pipe anchors, and pipe collars shall have a 28-day strength of 3000 psi, unless otherwise specified.

3.03. Pre-cast Concrete. Pre-cast concrete manholes shall conform to ASTM C478. Minimum wall thickness not less than one-twelve (1/12) of inside diameter, plus one inch or five (5) inches, whichever is greater.

3.04. Pre-cast Concrete Riser and Base Sections. Circular, uniform outside diameter; ASTM C478, except modified herein. Developed bases shall be used unless prior approval is obtained from the Engineer. The diameter of the base pad shall be eight (8) inches greater than outside diameter of the manhole.

3.05. Cone Sections. Eccentric, ASTM C478; wall thickness and reinforcement as specified for riser sections.

3.06. Pre-cast Concrete Adjusting Rings. Circular, ASTM C478, with shear keys. Pre-cast adjusting rings shall be 4 inches or 6 inches in thickness.
3.07. Reinforcement Steel. Welded Wire Fabric-ASTM A185. Reinforcing Bars- ASTM A615, Grade 40, or Grade 60. Fabricated Steel Bar and Rod Mats - ASTM A184, Grade 40, or Grade 60

3.08. Resilient Manhole/Pipe Connectors. Pipe openings shall contain flexible gaskets conforming to the requirements of ASTM C923. Mortar connections will be allowed only if prior approval has been given by the Engineer. Flexible gaskets shall be manufactured by the Press-Seal Gasket Corporation, A-Lok Products Inc., or approved equal. When RCP is used with A-Lok gasket, the barrel of the RCP shall be lubricated to prevent damage to the gasket during insertion. When PSX gaskets are used, the take-up screws for the gasket clamps shall be positioned a minimum of 90° apart. The specific type of gasket approved for each diameter is referenced in the table below.

Diameter (in.)	PSX	A-LOK	A-LOK: X-CEL
8	Yes	Yes	Yes
10	Yes	Yes	Yes
12	Yes	Yes	Yes
15	Yes	Yes	No
18	Yes	Yes	No
21	Yes	Yes	No
24	Yes	Yes	No
27	Yes	Yes	No
30	Yes	Yes	No
36	Yes	Yes	No
42	Yes	Yes	No
48	Yes	Yes	No

3.09. Joint Sealant. Joints shall be sealed with preformed bitumastic sealants meeting the requirements of Federal Specification SS-S-210A. The minimum bead dimension shall be an inch square. The sealants shall be placed at the elbow of the section's joint. The sealant shall be butt-joined and not lapped.

3.10. FRAME SEALING SYSTEM. Two types of sealing systems will be allowed: external or internal sealing systems.

1. External: The joint between the frame ring and chimney and between the frame ring and the adjustment ring shall be sealed with Wrapid Seals as supplied by Canusa, external manhole seals, as supplied by Cretex Specialty Products or approved equal. The material shall be able to withstand hydrogen sulfide and other corrosive gases found in sewers. The heat shrinkable wraparound sleeves are described below:

HEAT SHRINKABLE WRAPAROUND SLEEVES: The wrap system shall consist of a two-piece sleeve (backing + adhesive) with a closure system and a G-type primer. It shall consist of an irradiated cross-linked polyolefin sheeting, pre-coated with a layer of anti-corrosion adhesive. The backing shall have a minimum recovery of 22%

The wrap shall have a mastic-type adhesive, specially formulated to become fluid at temperatures achieved during installation and maintain flexibility in cold climates with installation temperatures down to -40°F. Upon cooling the adhesive shall form a tough, elastomeric protective layer. The wrap shall employ a closure seal to allow sealing of the overlap area. The overall thickness of an applied sleeve shall nominally measure 0.100" (2.5mm). The heat shrinkable wraparound sleeves shall be "Wrapid Seal" as manufactured by Canusa or approved equal.

The sleeves shall be installed according to the following procedure:

Ensure surface to be covered is free of dirt, sharp points, and preheated to remove moisture. Apply the primer over all areas to be covered and let dry. (5-15 min.)

Cut a length of sleeve twelve inches longer than the exterior circumferential distance around the manhole measured at each joint or manufacturers recommendation. The wrap shall extend six (6) inches above each joint and six (6) inches below each joint on the exterior surface of the manhole. The wrap applied to the cone section and casting shall be eighteen (18) inches wide.

Wrap the sleeve around the manhole. Position the self-adhering closure seal at the overlap. Heat the overlap area and pat down with a gloved hand to ensure bonding. Heat the sleeve until the entire sleeve has recovered. Smooth out the wrinkles. Quench with water or allow to cool prior to backfilling for the adhesive to set.

a.) For castings installed above ground contractor shall grout between the gussets to create a bevel with a 3000 psi mix of (small aggregate 3/8" max) concrete to insure the heat shrinkable wraparound sleeve in making contact to entire surface area of chimney section. The wraparound sleeve should be fitted to overlap the grouted area at least 2-inches above grouted slope. Contractor shall then install a stainless steel band around top and bottom of wraparound sleeve to insure security of sleeve. Contractor shall then paint heat shrinkable wraparound sleeve with white latex paint after installation of sleeves and bands.

b.) For castings below ground level the contractor will cut the heat shrinkable wraparound sleeves around casting gussets and secure to frame.

2. Internal Sealing System. Manholes frame-chimney joint area can be sealed with an internal flexible rubber seal, as manufactured by Cretex Specialty Products, or approved equal. The flexible rubber sleeve, extensions and wedge strips shall be extruded or molded from a high grade rubber compound conforming to the applicable requirements of ASTM C-923, with a minimum 1500 psi tensile strength, maximum 18% compression set and a hardness (durometer) of 48 + or- 5.

The sleeve shall be either double or triple pleated with a minimum unexpanded vertical height of 8" and 10" respectively, a minimum thickness of 3/16" and shall be capable of a vertical expansion when installed of not less than 2". The top and bottom section of the sleeve shall contain an integrally formed expansion band recess and multiple sealing fins.

The extension shall have a minimum thickness of 3/16". The top section of the extension shall be shaped to fit into the bottom band recess of the sleeve under the bottom chimney seal band. The bottom section of the extension shall contain an integrally formed expansion band recess and multiple sealing fins matching that of the rubber sleeve.

Any splice used to fabricate the sleeve and extension shall be hot vulcanized and have a strength such that the sleeve shall withstand a 180 degree bend with no visible separation.
The continuous wedge strip used to adapt the rubber sleeve to sloping surfaces shall have the slope differential needed to provide a vertical band recess surface, be shaped to fit into the band recess and have an integral band restraint. The length of the wedge strips shall be such that, when its ends are butted together, it will cover the entire inside circumference of that band recess needing slope adjustment.

The expansion bands used to compress the sleeve against the manhole shall be 16-gauge stainless steel conforming to ASTM A-240, Type 304, with a minimum width of 1-3/4". The expansion mechanism shall have the capacity to develop the pressures necessary to make a watertight seal and shall have a minimum adjustment range of 2 diameter inches. Studs and nuts used for this mechanism shall be stainless steel conforming to ASTM F-593 and 594, Type 304.

Elastomeric polyurethane resin-saturated oakum can be substituted for the butyl rubber elastic material. The material shall be able to withstand hydrogen sulfide and other corrosive gases. The material shall be installed in a double row circumferentially at each joint. For the resin-saturated oakum system, the outer ring shall be saturated with a urethane base foam chemical sealing material. The inner ring shall be saturated with water and shall be placed to prevent urethane foam from entering the manhole.

3.11. Mastic Fill Gaskets. Mastic filler shall be butyl rubber compatible with resilient connector material, or Rapid Seal.

3.12 Rubber. ASTM C361, Section 6.9.1, except gasket shall be synthetic, with hardness of 40 ±5 when measured by ASTM D2240, Type A Durometer.

3.13. Waterproofing. Exterior surfaces shall be coated with one of the following approved coatings:

A total dry film thickness of not less than 14.0 mils of Anchor-Tite Uni-Seal Asphalt Dampproofing Liquid Grade.

A total dry thickness of not less than 4.0 mils of Tnemec Series 66 Hi-Build Epoxiline.

3.14. Castings. ASTM A48, Class 35B or better. Kansas City, Missouri Standard, MH-RC, Type R3, latest revision.

4. MANUFACTURE. Pre-cast base sections shall be provided with circular openings, with continuous, circular, resilient connectors cast into the wall.

Resilient connectors shall be installed in accordance with the manufacturer's recommendations, except that connectors shall be positioned so that sealing or resealing operations may be accomplished from inside the manhole.

Pre-cast sections may be provided with lifting notches on the inside faces of the walls to facilitate handling. Lifting notches shall be not more than 3 inches deep; holes extending through the wall will not be acceptable.

If pre-cast concrete base sections are used, part of the concrete invert fill may be furnished with the pre-cast unit; however, a rough surface shall be provided to improve bond with the final invert fill. At least the top 2 inches of the concrete invert fill shall be installed in the field.

5. DELIVERY. Pre-cast concrete sections shall not be delivered to the job until the concrete control cylinders have attained a strength of at least 80 percent of the specified minimum.

6. HANDLING. Pre-cast concrete sections shall be handled carefully and shall not be bumped or dropped. Hooks shall not be permitted to come in contact with joint sections.

7. INSPECTION. Pre-cast concrete sections shall be inspected when delivered and all cracked or otherwise visibly defective units rejected. Owner reserves the right to inspect the production of the units at the manufacturing plant.

8. MANHOLE EXCAVATION.

8.01. Excavation. This Section and Earthwork Section shall govern excavation for manholes and special structures. It shall be achieved in a suitable and orderly manner providing a minimum disturbance to the general public.

8.02. Depth of Excavation. Depth of excavation shall be to that required for proper installation of the manhole or structure. Over-depth excavation may be required by the Engineer if the subgrade is unstable. Over-depth excavation due to unstable subgrade shall be backfilled as required by the Engineer. Over-depth excavation occurring through an oversight by the Contractor shall be backfilled as required by the Engineer at no additional cost to the Owner.

8.03. Side Clearances. Side clearance outside the manhole and/or structures shall be no greater than to allow for forming connection of piping, proper application of special coatings, if required, and to permit inspection. When concrete is to be placed directly against excavated faces, excavation shall be sufficiently outside of the manhole or structure to provide not less than three (3) inches of concrete cover over the steel reinforcement.

9. MANHOLE INSTALLATION.

9.01. Bases. If developed bases cannot be used, poured concrete bases shall be used. Cast-in-place concrete bases shall have a minimum thickness of eight (8) inches. Concrete shall be placed on undisturbed earth in accordance with requirements of the concrete section. The bottom wall section shall be embedded in the base section a minimum of four (4) inches. The bottom pre-cast wall section shall not be used for supporting or leveling the other wall sections prior to pouring the base. Concrete blocks shall be used for supporting or leveling the bottom wall section prior to pouring the base. Use of Wood blocks will not be accepted.

If pre-cast concrete (developed) bases are used, the subgrade materials shall be excavated to undisturbed earth and a uniform elevation which will permit at least 4 inches of crushed rock, as specified in the earthwork section, to be installed and compacted. The surface of the granular material shall be carefully graded and the base section accurately set so that connecting pipes will be on proper line and grade. The elevation of the granular material shall be adjusted as required until proper grade and alignment of the base section has been attained.

No wedging or blocking under pre-cast concrete bases will be permitted.

When resilient connectors are used with cast-in-place bases, the concrete fill under the connecting pipe outside the manhole shall be deleted and shall be replaced with granular embedment material to undisturbed earth.

In no case shall the invert section through a manhole be greater than that of the outgoing pipe. The shape of the invert shall conform exactly to the lower half of the pipe it connects. Side branches shall be connected with as large radius of curve as practicable. All inverts shall be troweled to a smooth, clean surface.

9.02. Riser and Cone Sections. Circular pre-cast sections shall be provided with a rubber or mastic gasket to seal joint between sections. Lifting notches in manhole walls shall be filled with non-shrinking

grout. The minimum horizontal clear distance in the barrel of the manholes shall not be less than four (4) feet unless otherwise specified on the Drawings.

9.03. Connecting Piping. The space between connecting piping and the wall of the pre-cast sections shall be completely filled with non-shrinking grout, except where resilient connectors are provided.

When resilient connectors are used, the connecting pipe shall be carefully adjusted to proper line and grade, and bedding material shall be compacted under the haunches and to the springline of the pipe for a distance of at least 6 feet from the manhole wall and to at least the minimum trench width. The pipe shall be installed in the resilient connector prior to backfilling outside the manhole and shall be resealed as required after completion of the manhole and backfill. All visible leakage shall be eliminated.

The connecting pipe for installation with resilient connectors shall be plain end, square cut spigots and shall not protrude more than one inch inside the manhole wall. A clear distance of at least one-inch from the end of each connecting pipe and around the pipe shall be provided when the concrete invert fill is installed or as recommended by the manufacturer of the resilient connector. After completion of the manhole, the boxout shall be filled with mastic filler material, completely filling the space beneath the pipe and extending to at least the springline. The filler material shall provide a smooth, uniform surface between the inside diameter of the pipe and manhole invert.

9.04. Inverts. Inverts shall structural concrete and steel-troweled (or formed if inverts are pre-cast) to produce a dense, smooth finish. The invert channel shall be "U" shaped in cross section and extend upward three-forth of the inside pipe diameter. Smooth transitions shall be formed for pipes of different sizes, elevation, and bends. The invert bench shall be constructed with a 4:1 slope to drain.

9.05. Steps. Steps shall be aligned vertically below the casting and spaced at sixteen (16) inch centers. The top step shall be not more than one (1) foot below the top of the cone. The lowest step shall be not more than two (2) feet above the invert bench. Field drilled step holes are not permitted in pre-cast concrete manholes.

9.06. Top Elevation. The finished top elevation of manhole castings shall conform to the following unless otherwise shown on the Drawings or directed by the Engineer.

a) In paved or future paved areas, the top of the casting shall conform to the slope of the pavement and be 1/8 inch below the finished pavement elevation.

b) In non-pavement areas, the top of the casting shall be not more than six (6) inches above the surrounding ground or less than the sod's upper root limit. The final elevation shall be at a point where water will not pond over the manhole cover.

9.07. Manhole Adjustment. All new manholes will be provided with adjustment ring(s) underneath the casting as shown on drawings. A maximum of one (1) 6-inch or two (2) 4-inch riser rings shall be installed on top of the cone section. The joints shall be sealed with a double bead preformed bitumastic

sealant. If the top of an existing manhole is required to be raised to an elevation which will exceed twelve (12) inches, or lowered more than the adjustment rings will allow, all vertical adjustments shall be made to the barrel of the manhole.

9.08. Castings. Casting shall be installed with the mud ring inserted inside the manhole opening and resting on a minimum of two rows of preformed bitumastic joint sealant.

10. DAMPPROOFING. Dampproofing may be applied to pre-cast units in the shop. If the shop coating is damaged during construction, a touch up coat of paint as required shall be applied and allowed to dry prior to backfilling. Surfaces to receive paint shall be dry.

11. DRAWINGS AND DATA. Drawings and data covering pre-cast concrete sections shall be submitted in accordance with the submittals section.

12. MANHOLE TESTING. The Contractor shall visually verify the absence of leaks and perform a vacuum test, on manholes that have inlet and outlet pipes of less than 42 inches in diameter, in accordance with Section 02702 - Sewer Pipe and Manhole Testing.

End of Section.

WATER SERVICES DEPARTMENT
ENGINEERING DIVISION
8750-078 (Rev. 9/96)
PROJECT Standard Manhole Detail

KCMO Water Services Department

Sheet 1 of 1
Made By WSD ENGR. Date 3/15/02
Checked WSD ENGR. Date 3/15/0
Job No
Drawing No. MH-WSD1

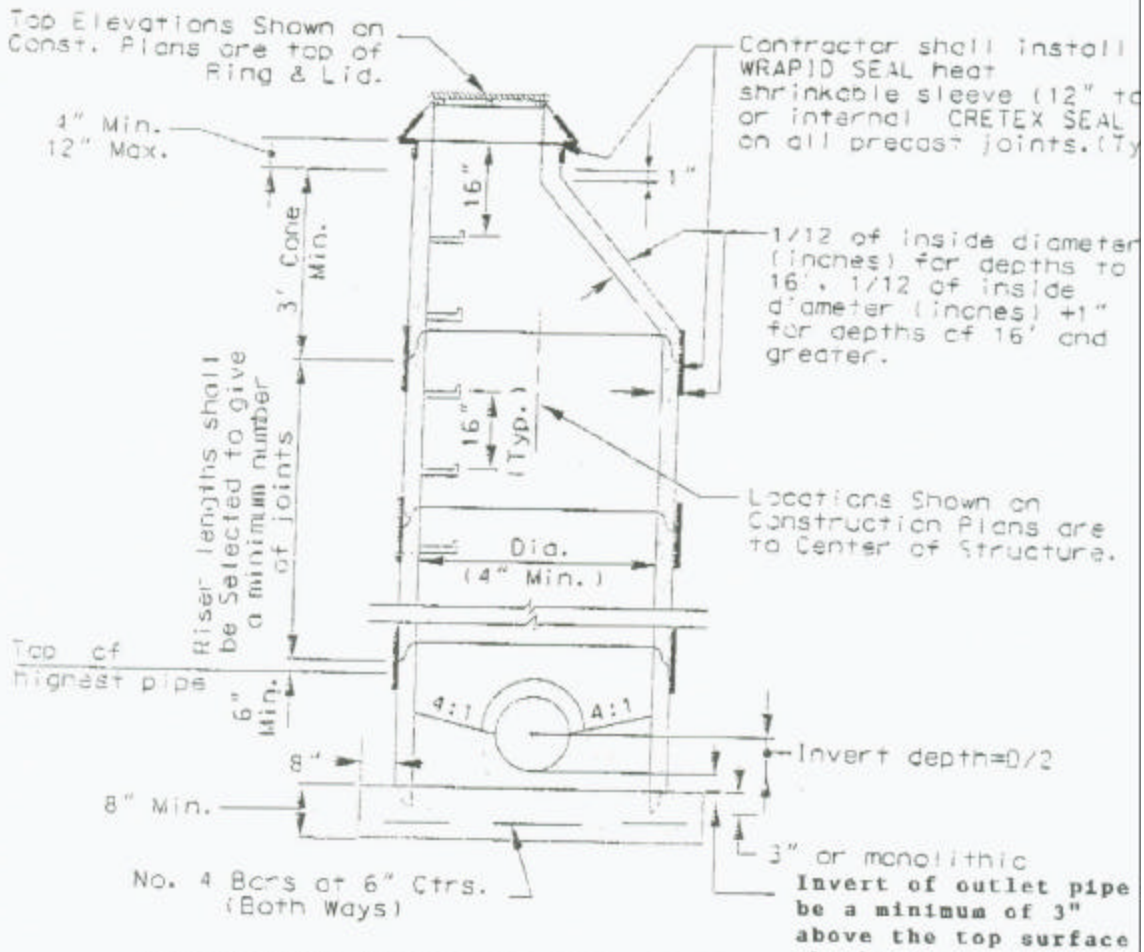

STANDARD PRECAST MANHOLE DETAIL
(ECCENTRIC CONE)

SCALE: NONE

End of this Sheet

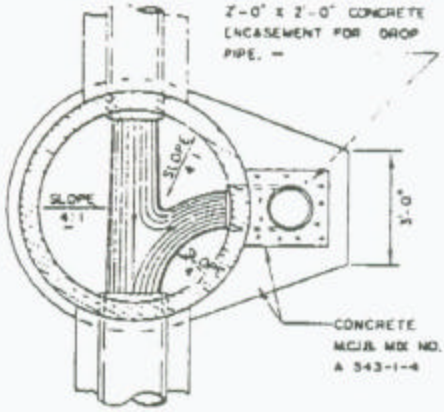

SECTION A-A

REVERSE Y WITH SPIGOT END			
SIZE	L	A	B
8" DIA. 8"	3'-0"	2'-3"	3'-3"
10" DIA. 10"	3'-0"	2'-3"	[illegible]
12" DIA. 12"	3'-0"	2'-[illegible]	[illegible]

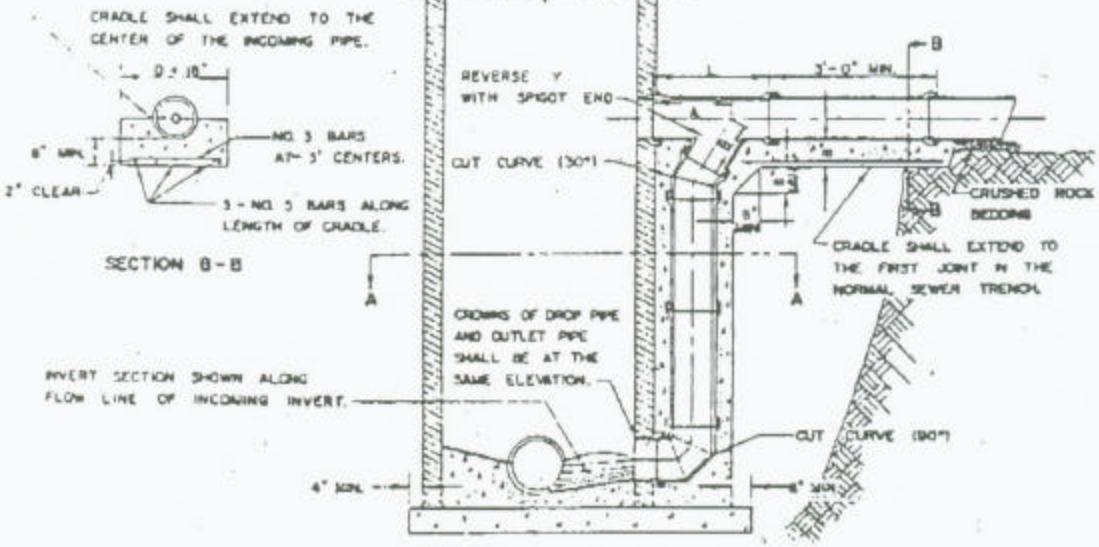

SECTION B-B

SECTION VIEW

ADOPTED

DIRECTOR OF PUBLIC WORKS DATE

ENTRY NO. 81656

KANSAS CITY, MO DEPARTMENT OF PUBLIC WORKS ENGINEERING DIVISION	APPROVED	REVISED	MANHOLE - OUTSIDE DROP USE WITH ANY STANDARD MANHOLE	STANDARD PLAN MH-OD
	CITY ENGINEER DATE	1-4-15		

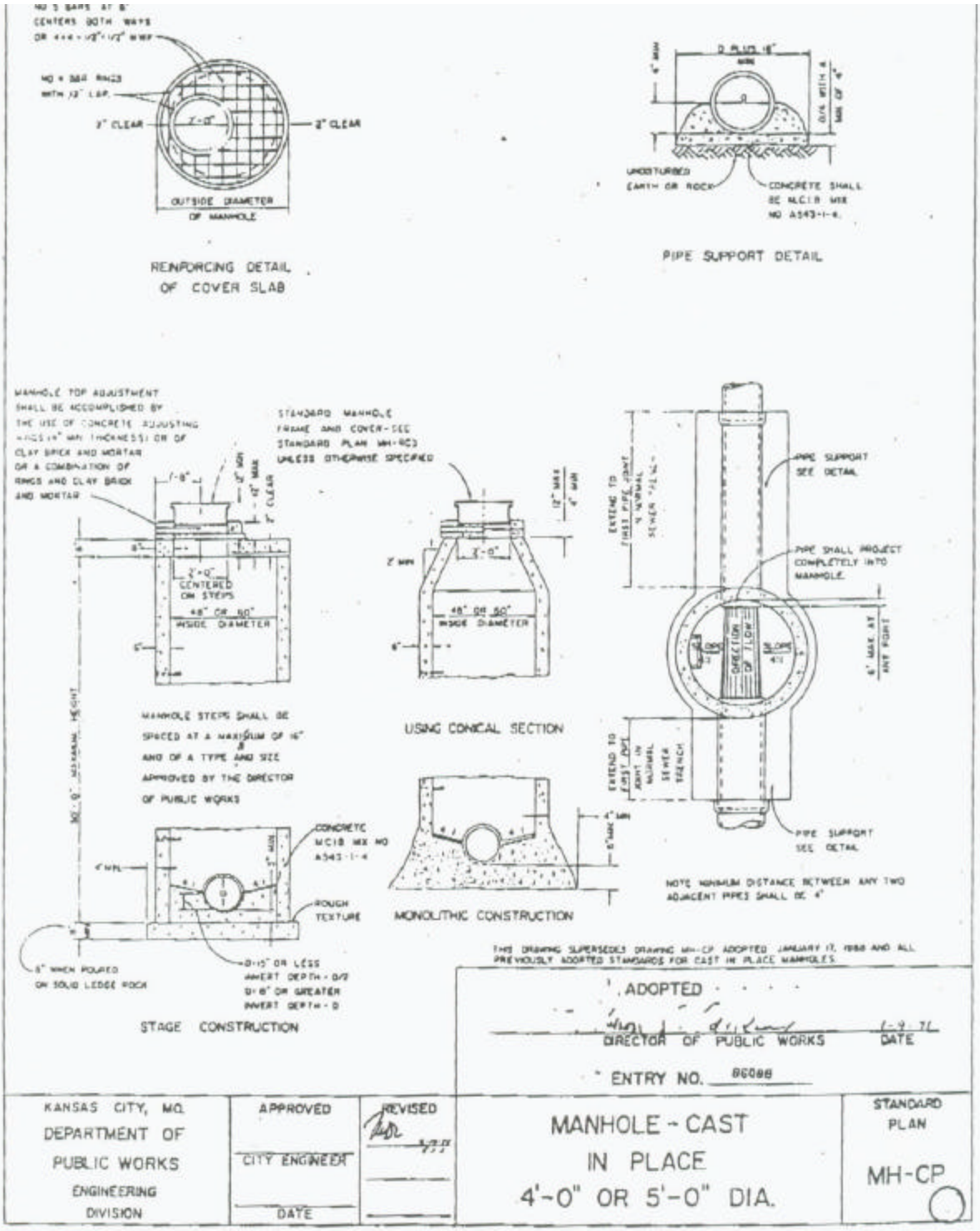
REINFORCING DETAIL OF COVER SLAB
OUTSIDE DIAMETER OF MANHOLE
PIPE SUPPORT DETAIL
UNDISTURBED EARTH OR ROCK
CONCRETE SHALL BE MCIB MIX NO A543-1-4.
MANHOLE TOP ADJUSTMENT SHALL BE ACCOMPLISHED BY THE USE OF CONCRETE ADJUSTING RINGS (4" MIN THICKNESS) OR OF CLAY BRICK AND MORTAR OR A COMBINATION OF RINGS AND CLAY BRICK AND MORTAR
STANDARD MANHOLE FRAME AND COVER - SEE STANDARD PLAN MH-RCD UNLESS OTHERWISE SPECIFIED
CENTERED ON STEPS
48" OR 60" INSIDE DIAMETER
MANHOLE STEPS SHALL BE SPACED AT A MAXIMUM OF 16" AND OF A TYPE AND SIZE APPROVED BY THE DIRECTOR OF PUBLIC WORKS
USING CONICAL SECTION
PIPE SUPPORT SEE DETAIL
PIPE SHALL PROJECT COMPLETELY INTO MANHOLE
DIRECTION OF FLOW
CONCRETE MCIB MIX NO A543-1-4
ROUGH TEXTURE
MONOLITHIC CONSTRUCTION
NOTE MINIMUM DISTANCE BETWEEN ANY TWO ADJACENT PIPES SHALL BE 4"
STAGE CONSTRUCTION
THIS DRAWING SUPERSEDES DRAWING MH-CP ADOPTED JANUARY 17, 1968 AND ALL PREVIOUSLY ADOPTED STANDARDS FOR CAST IN PLACE MANHOLES.
ADOPTED
DIRECTOR OF PUBLIC WORKS
DATE
ENTRY NO. 86088
KANSAS CITY, MO. DEPARTMENT OF PUBLIC WORKS ENGINEERING DIVISION
APPROVED
CITY ENGINEER
DATE
REVISED
MANHOLE - CAST IN PLACE 4'-0" OR 5'-0" DIA.
STANDARD PLAN
MH-CP

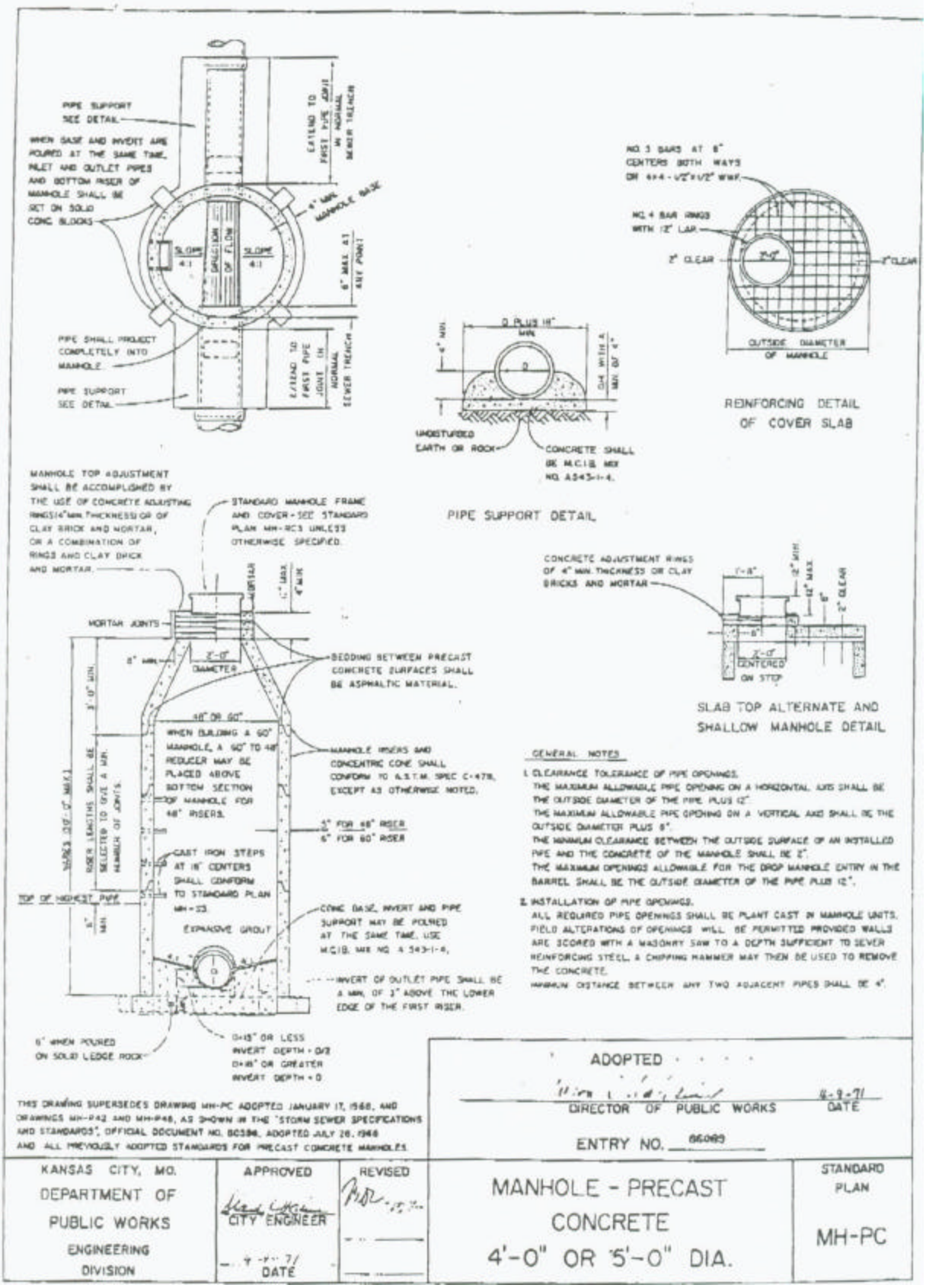
PIPE SUPPORT SEE DETAIL
WHEN BASE AND INVERT ARE POURED AT THE SAME TIME, INLET AND OUTLET PIPES AND BOTTOM RISER OF MANHOLE SHALL BE SET ON SOLID CONC. BLOCKS
EXTEND TO FIRST PIPE JOINT IN NORMAL SEWER TRENCH
6" MIN. MANHOLE BASE
SLOPE 4:1
DIRECTION OF FLOW
SLOPE 4:1
6" MAX. AT ANY POINT
PIPE SHALL PROJECT COMPLETELY INTO MANHOLE
PIPE SUPPORT SEE DETAIL
EXTEND TO FIRST PIPE JOINT IN NORMAL SEWER TRENCH
NO. 3 BARS AT 8" CENTERS BOTH WAYS OR 4x4 - 1/2"x1/2" WWF.
NO. 4 BAR RINGS WITH 12" LAP.
2" CLEAR
2" CLEAR
OUTSIDE DIAMETER OF MANHOLE
REINFORCING DETAIL OF COVER SLAB
D PLUS 18" MIN.
D
4" MIN.
D+6 WITH A MIN. OF 4"
UNDISTURBED EARTH OR ROCK
CONCRETE SHALL BE M.C.I.B. MIX NO. A543-1-4.
PIPE SUPPORT DETAIL
MANHOLE TOP ADJUSTMENT SHALL BE ACCOMPLISHED BY THE USE OF CONCRETE ADJUSTING RINGS (4" MIN. THICKNESS) OR OF CLAY BRICK AND MORTAR, OR A COMBINATION OF RINGS AND CLAY BRICK AND MORTAR.
STANDARD MANHOLE FRAME AND COVER - SEE STANDARD PLAN MH-RCS UNLESS OTHERWISE SPECIFIED.
1" MAX.
4" MIN.
MORTAR JOINTS
8" MIN.
2'-0" DIAMETER
BEDDING BETWEEN PRECAST CONCRETE SURFACES SHALL BE ASPHALTIC MATERIAL.
48" OR 60"
WHEN BUILDING A 60" MANHOLE, A 60" TO 48" REDUCER MAY BE PLACED ABOVE BOTTOM SECTION OF MANHOLE FOR 48" RISERS.
MANHOLE RISERS AND CONCENTRIC CONE SHALL CONFORM TO A.S.T.M. SPEC C-478, EXCEPT AS OTHERWISE NOTED.
3" FOR 48" RISER
6" FOR 60" RISER
3'-0" MIN.
RISER LENGTHS SHALL BE SELECTED TO GIVE A MIN. MEMBER OF JOINTS.
RISERS 3'-0" MAX.
CAST IRON STEPS AT 16" CENTERS SHALL CONFORM TO STANDARD PLAN MH-23.
TOP OF HIGHEST PIPE
8" MIN.
EXPANSIVE GROUT
CONE BASE, INVERT AND PIPE SUPPORT MAY BE POURED AT THE SAME TIME. USE M.C.I.B. MIX NO. A 543-1-4.
INVERT OF OUTLET PIPE SHALL BE A MIN. OF 3" ABOVE THE LOWER EDGE OF THE FIRST RISER.
6" WHEN POURED ON SOLID LEDGE ROCK
D=15" OR LESS INVERT DEPTH = D/2
D=18" OR GREATER INVERT DEPTH = D
CONCRETE ADJUSTMENT RINGS OF 4" MIN. THICKNESS OR CLAY BRICKS AND MORTAR
1'-8"
12" MIN.
12" MAX.
8"
2" CLEAR
8"
2'-0" CENTERED ON STEP
SLAB TOP ALTERNATE AND SHALLOW MANHOLE DETAIL
GENERAL NOTES
1. CLEARANCE TOLERANCE OF PIPE OPENINGS.
THE MAXIMUM ALLOWABLE PIPE OPENING ON A HORIZONTAL AXIS SHALL BE THE OUTSIDE DIAMETER OF THE PIPE PLUS 12".
THE MAXIMUM ALLOWABLE PIPE OPENING ON A VERTICAL AXIS SHALL BE THE OUTSIDE DIAMETER PLUS 8".
THE MINIMUM CLEARANCE BETWEEN THE OUTSIDE SURFACE OF AN INSTALLED PIPE AND THE CONCRETE OF THE MANHOLE SHALL BE 2".
THE MAXIMUM OPENINGS ALLOWABLE FOR THE DROP MANHOLE ENTRY IN THE BARREL SHALL BE THE OUTSIDE DIAMETER OF THE PIPE PLUS 12".
2. INSTALLATION OF PIPE OPENINGS.
ALL REQUIRED PIPE OPENINGS SHALL BE PLANT CAST IN MANHOLE UNITS. FIELD ALTERATIONS OF OPENINGS WILL BE PERMITTED PROVIDED WALLS ARE SCORED WITH A MASONRY SAW TO A DEPTH SUFFICIENT TO SEVER REINFORCING STEEL. A CHIPPING HAMMER MAY THEN BE USED TO REMOVE THE CONCRETE.
MINIMUM DISTANCE BETWEEN ANY TWO ADJACENT PIPES SHALL BE 4".
THIS DRAWING SUPERSEDES DRAWING MH-PC ADOPTED JANUARY 17, 1968, AND DRAWINGS MH-P42 AND MH-P48, AS SHOWN IN THE "STORM SEWER SPECIFICATIONS AND STANDARDS", OFFICIAL DOCUMENT NO. 80386, ADOPTED JULY 26, 1968 AND ALL PREVIOUSLY ADOPTED STANDARDS FOR PRECAST CONCRETE MANHOLES.
ADOPTED
DIRECTOR OF PUBLIC WORKS
8-9-71
DATE
ENTRY NO. 86089
KANSAS CITY, MO.
DEPARTMENT OF PUBLIC WORKS
ENGINEERING DIVISION
APPROVED
CITY ENGINEER
DATE
REVISED
MANHOLE - PRECAST CONCRETE 4'-0" OR 5'-0" DIA.
STANDARD PLAN
MH-PC

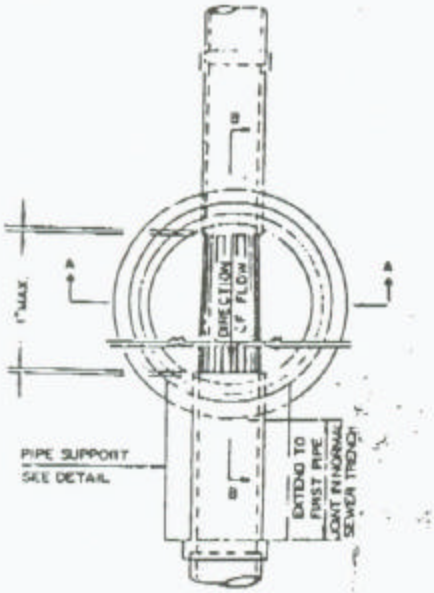

PLAN

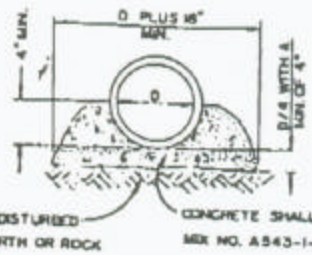

PIPE SUPPORT DETAIL
(NON GASKETED ONLY)

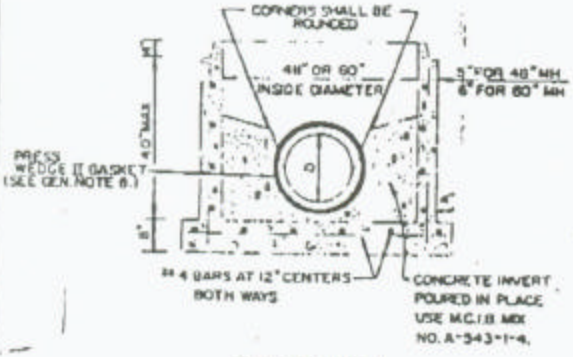

SECTION A-A

GENERAL NOTES

1. CLEARANCE TOLERANCE OF PIPE OPENINGS. (NON GASKETED ONLY)
   THE MAXIMUM ALLOWABLE PIPE OPENING ON A HORIZONTAL AXIS SHALL BE THE OUTSIDE DIAMETER OF THE PIPE PLUS 12."
   THE MAXIMUM ALLOWABLE PIPE OPENING ON A VERTICAL AXIS SHALL BE THE OUTSIDE DIAMETER PLUS 8".
   THE MINIMUM CLEARANCE BETWEEN THE OUTSIDE SURFACE OF AN INSTALLED PIPE AND THE CONCRETE OF THE MANHOLE SHALL BE 2".
   THE MAXIMUM OPENINGS ALLOWABLE FOR THE DROP MANHOLE ENTRY IN THE BARREL SHALL BE THE OUTSIDE DIAMETER OF THE PIPE PLUS 12".
2. INSTALLATION OF PIPE OPENINGS.
   ALL REQUIRED PIPE OPENINGS SHALL BE PRECAST IN MANHOLE UNITS. FIELD ALTERATIONS OF OPENINGS WILL BE PERMITTED PROVIDED WALLS ARE SCORED WITH A MASONRY SAW TO A DEPTH SUFFICIENT TO SEVER REINFORCING STEEL. A CHIPPING HAMMER MAY THEN BE USED TO REMOVE THE CONCRETE. MINIMUM DISTANCE BETWEEN ANY TWO ADJACENT PIPES SHALL BE 4".
3. THE PRECAST DEVELOPED BASE MANHOLE SHALL CONFORM TO A.S.T.M. C-478 SPECIFICATIONS.
4. NO PIPE SUPPORT (P.C.C.) REQUIRED IF MANHOLE IS GASKETED.
5. THERE SHALL BE AT LEAST 1/2" OF FLEXIBLE MATERIAL BETWEEN PIPE AND THE INVERT ON GASKETED INSTALLATION.
6. PIPE OPENINGS SHALL BE WITHIN THE FOLLOWING TOLERANCES OF PLAN LOCATIONS: 1" VERTICAL - 3" HORIZONTAL.
7. IF CRUSHED ROCK IS USED UNDER MANHOLE, IT SHALL BE LEVELED OVER ENTIRE EXCAVATED SECTION.
8. PRESS WEDGE II PIPE TO MANHOLE GASKET, OR APPROVED EQUAL SHALL BE CAST INTO DEVELOPED BASE. (GASKETED ONLY)
9. THE MAXIMUM PIPE SIZE ACCEPTABLE FOR A 4 FOOT DIAMETER MH IS 24" AND FOR A 5 FOOT DIAMETER MH IS 30".

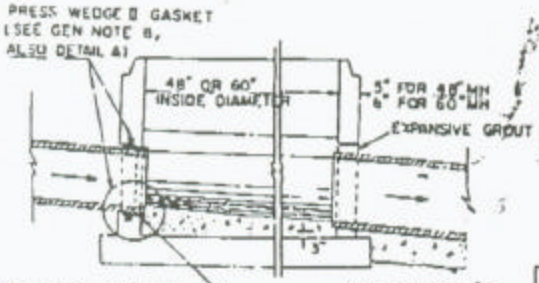

PART SECTION B-B
WITH PRESS WEDGE II GASKET

PART SECTION B-B
WITH PIPE SUPPORT

DETAIL "A"

ADOPTED
DIRECTOR OF PUBLIC WORKS
7-30-81
DATE
ENTRY NO. 810376

KANSAS CITY, MO. DEPARTMENT OF PUBLIC WORKS ENGINEERING DIVISION	APPROVED July 30, 1981 CITY ENGINEER	REVISED Aug 12 1982	DEVELOPED BASE MANHOLE PRECAST CONCRETE 4'0" OR 5'0" DIA.	STANDARD PLAN MH-DB

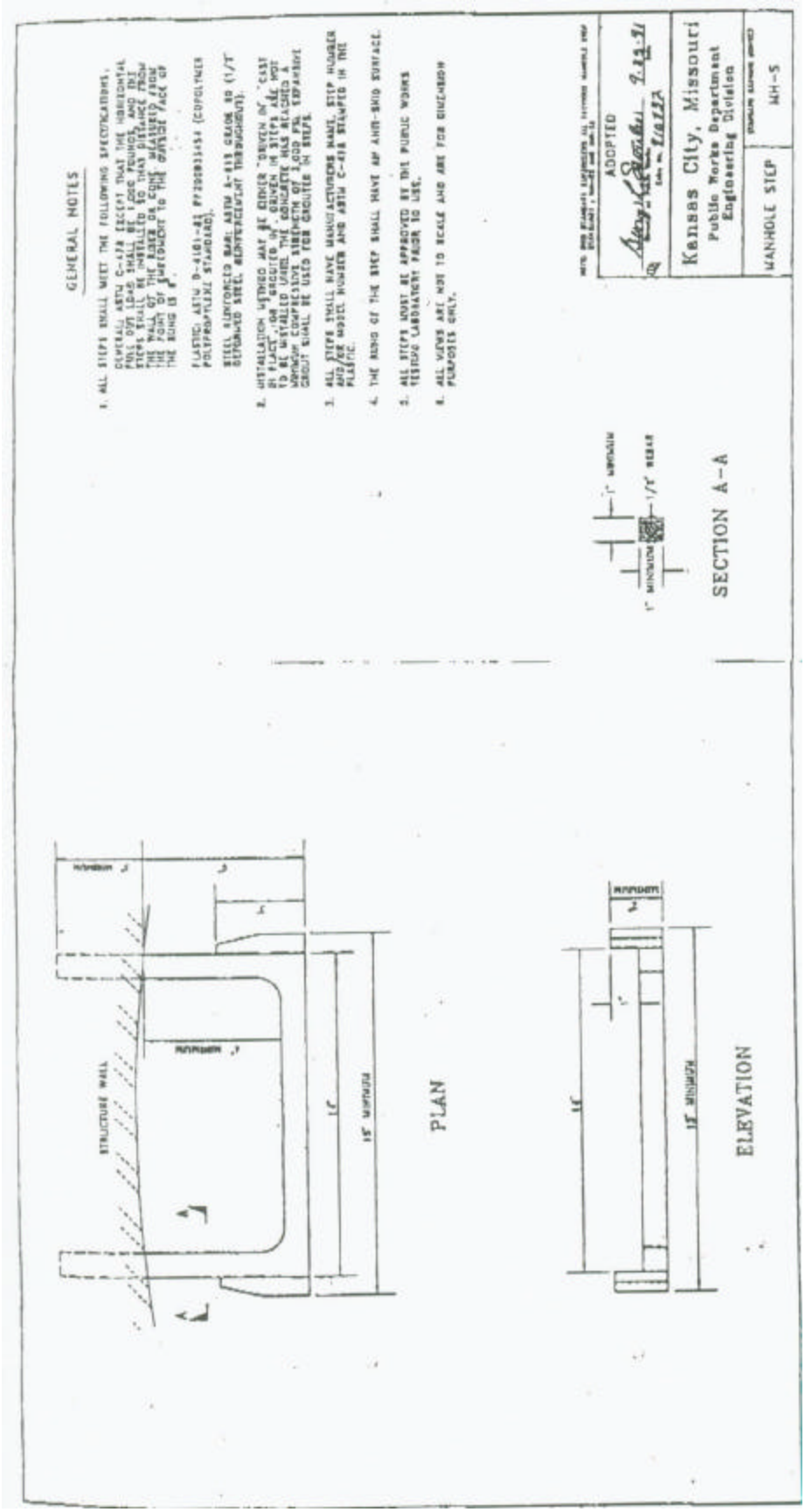
GENERAL NOTES
1. ALL STEPS SHALL MEET THE FOLLOWING SPECIFICATIONS.
GENERAL: ASTM C-478 (EXCEPT THAT THE HORIZONTAL PULL OUT LOADS SHALL BE 1,200 POUNDS, AND THE STEPS SHALL BE INSTALLED SO THAT DISTANCE FROM THE FACE OF THE WALL TO THE CENTER LINE OF THE STEP IS 4 1/2" ± 1/2" AND THE DISTANCE FROM THE FACE OF THE FOUNDATION TO THE FRONT FACE OF THE RING IS 3".
PLASTIC: ASTM D-4101-82 PP20883H54 (COPOLYMER POLYPROPYLENE STANDARD).
STEEL REINFORCED BAR: ASTM A-615 GRADE 60 (1/2" DEFORMED STEEL REINFORCEMENT THROUGHOUT).
2. INSTALLATION METHOD MAY BE EITHER "DRYPACK" OR "CAST IN PLACE". ON "CAST IN PLACE" GROUTED IN STEPS MUST NOT TO BE INSTALLED UNTIL THE CONCRETE HAS REACHED A MINIMUM COMPRESSIVE STRENGTH OF 3,000 PSI. EXPANSION GROUT SHALL BE USED FOR GROUTED IN STEPS.
3. ALL STEPS SHALL HAVE MANUFACTURERS NAME, STEP NUMBER AND/OR MODEL NUMBER AND ASTM C-478 STAMPED IN THE PLASTIC.
4. THE RUNG OF THE STEP SHALL HAVE AN ANTI-SKID SURFACE.
5. ALL STEPS MUST BE APPROVED BY THE PUBLIC WORKS TESTING LABORATORY PRIOR TO USE.
6. ALL VIEWS ARE NOT TO SCALE AND ARE FOR DIMENSION PURPOSES ONLY.
ADOPTED
Kansas City, Missouri
Public Works Department
Engineering Division
MANHOLE STEP
MH-5
SECTION A-A
1" MINIMUM
1/2" REBAR
1" MINIMUM
STRUCTURE WALL
PLAN
ELEVATION
15" MINIMUM
15" MINIMUM

03400 PAVED SLOPE PROTECTION

A. Related Work Specified Elsewhere:

1. Section: 03311 Portland Cement Concrete

B. Scope: The section covers placing flagstones in the indicated concrete slope protection.

C. Flagstone treatment shall meet all the requirements of the above referenced sections except as modified hereinafter.

D. References: The publications listed below form a part of this specification to the extent referenced. The publications are referred to in the text by basic designation only.

American Society for Testing and Materials (ASTM):

Designation: C 568-89	Standard Specification for Limestone Building Stone

E. Submittals: Include, but not limited to, the following:

1. Samples: Three sets of samples not less than 4" x 4" in size. Include in each set the full range of exposed color and texture to be expected in the completed work.

2. Shop Drawings: Drawings showing range of sizes, dimensions, sections and profiles of stonework units, the arrangement and provisions for jointing, reinforcement and other necessary details.

F. Material: Limestone material shall comply with requirements of ASTM C568, Category III (high density). The material shall be produced from a limestone quarry with consistent color range and texture. Material shall be buff and grey blend, color range similar to Heritage Blend, supplied by Sturgis Materials, Kansas City, Kansas.

Stones shall have a minimum face size of 4" x 4" with a minimum thickness of 2" and a maximum thickness of 4".

G. Construction Requirements:

1. The flagstone shall be placed and positioned after the concrete slab has been placed and struck off and before any set has taken place. Stones shall be placed in random pattern and pressed into the concrete a minimum of 1/2 the stone thickness. Stones shall not be buried in concrete.

2. In order to permit access for placement of the stones, the adjacent sections of the concrete slab shall not be placed at the same time.

3. Care shall be taken not to dislodge stones that have been set. If stones become dislodged and cannot be reset due to initial set of the concrete, the stones shall be reset with mortar.

4. After all stones have been placed, excess concrete or mortar shall be cleaned from the exposed surfaces to the satisfaction of the Contracting Officer.

H. Payment and Coverage: Payment for this work including flagstone concrete and reinforcement shall be made at the unit contract price bid per square yard as listed in the itemized proposal.

The following coverage shall be in Table 2:

Basic Contract Paved Slope Protection	Optional Contract Paved Slope Protection
Left Side, -0+60 to 0+20, Drop Structure	Left Side, 0+20 to 1+40
Left Side, 2+20 to 3+60, Dam 1	Left Side, 1+20 to 2+10
Left Side, 5+30 to 7+60, Dam 2	Left Side, 10+00 to 11+20
Left Side, 8+30 to 10+00, Bridge	Left Side, 13+00 to 14+10
Left Side, 11+20 to 11+80, Dam 3	Left Side, 14+10 to 17+00
Left Side, 12+70 to 13+00, Dam 3	Left Side, 18+20 to 19+00
Left Side, 16+00 to 19+00, Dam 4	Left Side end, 30+60 to 30+90
Left Side, 22+00 to 25+00, Dam 5	Right Side, 0+20 to 1+40
Left Side, 27+50 to 30+00, Dam 6	Right Side, 3+90 to 5+20
Right Side, -0+60 to 0+20, Drop structure	Right Side, 5+10 to 8+35
Right Side, 1+40 to 3+90, Dam 1	Right Side, 9+90 to 11+50
Right Side, 8+30 to 9+90, Bridge	Right Side end, 30+40 to 31+20
Right Side, 11+50 to 12+80 Dam 3	
Right Side, 16+00 to 19+50, Dam 4	
Right Side, 21+80 to 23+50, Dam 5	
Right Side, 27+80 to 29+80, Dam 6	

DIVISION 4 - MASONRY

(NOT USED)

DIVISION 5 – METALS

Section No.	Title
05018	Elastomeric Bearing Devices
05100	Steel Structures
05300	Intake Drainage System
05500	Miscellaneous Metals
05540	Steel H-Piles

SECTION 05018

ELASTOMERIC BEARING DEVICES

PART 1 GENERAL

1.1 REFERENCES

The publications listed below form a part of this specification to the extent referenced. The publications are referred to in the text by basic designation only.

AMERICAN SOCIETY FOR TESTING AND MATERIALS (ASTM)

ASTM A36	(1991) Structural Steel
ASTM A588	(1993) Standard Specification for High-Strength Low-Alloy Structural Steel With 50 ksi Minimum Yield Point to 4" Thick
ASTM A194	(1993) Standard Specifications for Carbon and Alloy Steel Nuts for Bolts for High Pressure and High Temperature Service
ASTM A563	(1993) Standard Specification for Carbon and Alloy Steel Nuts
ASTM D4014	(1989) Standard Specification for Plain and Steel Laminated Elastomeric Bearings for Bridges
ASTM D2240	(1991) Standard Test Method for Rubber Property-Durometer Hardness
ASTM D412	(1992) Standard Test Method for Vulcanized Rubber and Thermoplastic Rubbers and Thermoplastic Elastomers-Tension
ASTM D573	(1988) Standard Test Method for Rubber Deterioration in an Air Oven
ASTM D395	(1989) Standard Test Method for Rubber Property -Compression Set
ASTM D1149	(1991) Standard Test Method for Rubber Deterioration Surface Ozone Cracking in a Chamber
ASTM D746	(1979) Standard Test Method for Brittleness Temperature of Plastics and Elastomers by Impact
ASTM D1043	(1992) Standard Test Method for Stiffness Properties of Plastics as a Function of Temperature by Means of a Tension Test

1.2 SUBMITTALS

SD-13 Certificates

Materials and Test Reports; GA-ED

Certified copies of materials for anchor bolts, nuts, sole plates, elastomeric pads, adhesives and testing.

1.3 GENERAL

This work shall consist of furnishing and installing elastomeric bridge bearings. Included as components of bearings are sole plates, anchor bolts, and adhesives. Bearings shall be constructed in accordance with the details shown on the plans and specified. When complete details are not provided, bearings shall be furnished that conform to the limited details shown on the plans and shall provide the design capacities for loads and movements shown or specified and the performance characteristics specified. Bearings shall be furnished with the dimensions, material properties, elastomer grade and type of laminates required by the plans. All bearings shall be Grade 3, 60-durometer elastomer, and shall be subjected to the load testing requirements corresponding to Method A design, specified by AASHTO, using the design load shown on the plans.

1.3.1 Packaging, Handling and Storage

Prior to shipment from the point of manufacture, bearings shall be packaged in such a manner to ensure that during shipment and storage the bearings will be protected against damage from handling, weather, or any normal hazard. Each completed bearing shall have its components clearly identified, be securely bolted, strapped or otherwise fastened to prevent any relative movement, and marked on its top as to location and orientation in each structure in the project in conformity with the plans. Dismantling at the site shall not be done unless absolutely necessary for inspection or installation. All bearing devices and components shall be stored at the work site in an area that provides protection from environmental and physical damage. When installed, bearings shall be clean and free of all foreign substances.

1.4 MANUFACTURE OR FABRICATION

1.4.1 Bearing Components

Bearing devices or assemblies shall consist of components meeting the material specifications of this Section. Unless otherwise specified, the surface finish of bearing components that come into contact with each other or with concrete, but are not embedded in concrete, shall conform to the requirements of SECTION 05100, paragraph titled "Facing of Bearing Surfaces."

1.4.2 Bearing Assemblies

Bearing assemblies shall be preassembled in the shop by the supplier and checked for proper completeness and geometry before shipping to the site. Unless otherwise specified, steel, other than stainless steel, bearing components, including anchor bolts, shall be galvanized.

1.5 CONSTRUCTION AND INSTALLATION

1.5.1 Bearing Components

Bearings shall be installed by qualified personnel to the positions shown on the plans. Bearings shall be set at time of installation to the dimensions shown on the plans and adjusted as necessary to take into account the temperature and future movements of the bridge. Bridge bearings shall be set level, in exact position, and must have full and even bearing on all bearing planes. Bearing surfaces located at improper elevations or set not level and true to plane shall require either grinding of the surface, grout pack bearing seats or modification of the bearing such that intended bearing placement is as originally designed with the least amount of bearing modification. Elastomeric bearing pads shall be set directly on properly prepared concrete surfaces without bedding material. Bearings seated directly on steel work require the supporting surface to be machined so as to provide a level and planar surface upon which the bearing is placed.

PART 2 PRODUCTS

2.1 MATERIALS

2.1.1 Properties of the Elastomer

The raw elastomer shall be virgin Neoprene (polychloroprene). The elastomer compound shall be classified as being of low temperature grade 3. The grades are defined by the testing requirements in Table 1. A higher grade of elastomer may be substituted for a lower one. The elastomer compound shall meet the minimum requirements of Table 1. Test requirements may be interpolated for intermediate hardness. The measured shear modulus shall lie within 15 percent of the specified value of 120 psi at 73 degrees F. When test specimens are cut from the finished product, the physical properties shall be permitted to vary from those specified in Table 1 by 10 percent. All material tests shall be carried out at 73 Degrees F +- 4 Degrees F unless other wise noted. Shear modulus tests shall be carried out using the apparatus and procedure described in annex A of ASTM D4014.

2.1.2 Steel Laminates

Steel laminates used for reinforcement shall be made from rolled mild steel conforming to ASTM A36. The laminates shall have a minimum nominal thickness of 1/8". Holes in plates for manufacturing purposes will not be permitted.

2.1.3 Bond

Steel laminated bearings shall develop a minimum peel strength of 40 lb/in. Peel strength tests shall be performed by ASTM D429 Method B.

2.1.4 Fabrication

External load plates (sole plates) shall be protected from rusting by the manufacturer, and preferably shall be hot bonded to the bearing during vulcanization. Bearings that are designed to act as a single unit with a

given shape factor must be manufactured as a single unit.

TABLE 1: NEOPRENE QUALITY CONTROL TESTS

Note in the table that ASTM D1043 refers to modulus of rigidity," while ASTM D4014 refers to "shear modulus stiffness." The word "stiffness" is used here to cover both terms.

PHYSICAL PROPERTIES

ASTM D2240	Hardness (Shore A Durometer)	50 +/- 5	60 +/- 5	70 +/- 5
ASTM D412	Tensile Strength, Minimum psi	2250	2250	2250
	Ultimate Elongation, minimum %	400	350	300

HEAT RESISTANCE

ASTM D573	Change in Durometer Hardness, 70 Hours Maximum points at 212 deg F	15	15	15
	Change in Tensile Strength, Maximum %	- 15	- 15	- 15
	Change in Ultimate Elongation, Maximum %	-40	-40	-40

COMPRESSION SET

ASTM D395 Method B	22 Hours @ 212 deg F, Maximum %	35	35	35

OZONE

ASTM D1149	100 pphm ozone in air by volume, 20% strain 100 Degrees F +/- 2 Degrees F 100 hrs mounting procedure D518, Procedure A	No Cracks	"	"

LOW TEMPERATURE BRITTLENESS

ASTM D746	Grades 0 & 2-No Test Required			
Procedure B				
	Grade 3 Brittleness at - 40 Degrees F	No Failure	No Failure	No Failure
	Grade 4 Brittleness at - 55 Degrees F	No Failure	No Failure	No Failure
	Grade 5 Brittleness at - 70 Degrees F	No Failure	No Failure	No Failure

INSTANTANEOUS THERMAL STIFFENING

ASTM D1043	Grades 0 & 2-Tested @-25 Degrees F	Stiffness at test temperature shall not exceed 4

times the stiffness measured at 73 Degrees F

Grade 3--Tested @- 40 Degrees F

Grade 4--Tested @- 50 Degrees F

Grade 5--Tested @- 65 Degrees F

LOW TEMPERATURE CRYSTALLIZATION

Quad Shear Test as described

Grade O--No Test Required

Grade 2-7 days @ 0 degrees F

Grade 3-14 days @-15 degrees F

Grade 4-21 days @-35 degrees F

Grade 5-28 days @ -35 degrees F

Stiffness at test time and temperature shall not exceed 4 times the stiffness measured at 73 Degrees F with no time delay. The stiffness shall be measured with a quad test rig in an enclosed freezer unit. The test specimens shall be taken from a randomly selected bearing. A +-25% strain cycle shall be used, and a complete cycle of strain shall be applied with a period of 100 seconds. The first 3/4 cycle of strain shall be discarded and the stiffness shall be determined by the slope of the force deflection curve for the next 1/2 cycle of loading.

2.1.5 Fabrication Tolerances

Laminated bearings shall be built to the specified dimension within the following tolerances:

1. Overall Height
   Design Thickness
   1 1/4 in. or less - 0, + 1/8 in.
   Design Thickness over 11/4 in. - 0, + 1/4 in.

2. Overall Horizontal
   Dimensions
   36 in. or less - 0, + 1/4 in.
   Over 36 in. - 0,

		+ 1/2 in.
3.	Thickness of Individual Lavers of Elastomer (Laminated Bearings Only) At any point within the bearings	+-20% of design value but no more than +- 1/8 in.
4.	Parallelism with Opposite Face	
	Top and bottom	0.005 radians
	Sides	0.02 radians
5.	Position of Exposed Connection Members	
	Holes, slots or inserts	+-1/8 in.
6.	Edge Cover	
	Embedded laminates or connection members	- 0, + 1/8 in.
7.	Thickness	- 0, the smaller of
	Top and bottom cover layer (if required)	+ 1/16 in. and + 20% of the nominal cover layer thickness
8.	Size	
	Holes, slots, or inserts	+- 1/8 in.

2.1.6 Marking and Certification

The manufacturer shall certify that each bearing satisfies the requirements of the plans and these specifications, and shall supply a certified copy of material test results. Each reinforced bearing shall be marked in indelible ink or flexible paint. The marking shall consist of the orientation, the order number, lot number, bearing identification number, and elastomer type and grade number. Unless otherwise specified in the contract documents, the marking shall be on the face that is visible after erection of the bridge.

PART 3 EXECUTION

3.1 TESTING

3.1.1 Scope

Materials for elastomeric bearings and the finished bearings themselves shall be subjected to the tests described in this section. Material tests shall be in accordance with Table 1.

3.1.2 Frequency of Testing

The ambient temperature tests on the elastomer described in paragraph titled, "Ambient Temperature Tests on the Elastomer" shall be conducted

for the materials used in each lot of bearings. In lieu of performing a shear modulus test for each batch of material, the manufacturer may provide certificates from tests performed on identical formulations within the preceding year. Test certificates from the supplier shall be provided for each lot of reinforcement. The three low temperature tests on the elastomer described in the paragraph titled "Low temperature Tests on the Elastomer" shall be conducted on the material used in each lot of bearings for grades 3, 4, and 5 material and the instantaneous thermal stiffening test shall be conducted on material of grades 0 and 2. For grade 3 material, in lieu of the low temperature crystallization test, the manufacturer may choose to provide certificates from low-temperature crystallization tests performed on identical material within the last year. Low temperature brittleness and crystallization tests are not required for grades 0 and 2 materials, unless especially requested by the Engineer. Every finished bearing shall be visually inspected in accordance with the paragraph titled "Visual Inspection of the Finished Bearing".

3.1.3 Ambient Temperature Tests on the Elastomer

The elastomer used shall at least satisfy the limits prescribed in the Table 1 for durometer hardness, tensile strength, ultimate elongation, heat resistance, compression set, and ozone resistance. The bond to the reinforcement shall also satisfy paragraph titled "Bond". The shear modulus of the material shall be tested at 73 Degrees F using the apparatus and procedure described in annex A of ASTM D4014. It shall fall within 15 percent of the specified value of 120 psi.

3.1.4 Low Temperature Tests on the Elastomer

Grades 3, 4 and 5 elastomers shall be subjected to low temperature brittleness tests (ASTM D746), instantaneous low temperature stiffness tests (ASTM D1043), and low temperature crystallization tests (ASTM D4014). Grades 0 and 2 elastomers shall be subjected to instantaneous low temperature stiffness tests (ASTM D1043). The tests shall be performed in accordance with the requirements of Table 1 and the compound shall satisfy all limits for its grade.

3.1.5 Visual Inspection of the Finished Bearing

Every finished bearing shall be inspected for compliance with dimensional tolerances and for overall quality of manufacture. The edges of steel reinforced bearings shall be protected everywhere from corrosion.

3.1.6 Short-Duration Compression Tests on Bearings

The bearing shall be loaded in compression to 1.5 times its maximum design load shown on the drawings. The load shall be held constant for 5 min, removed, and reapplied for another 5 min. The bearing shall be examined visually while under the second loading. If the bulging pattern suggests laminate parallelism or a layer thickness that is outside the specified tolerances, or poor laminate bond, the bearing shall be rejected. If there are three or more separate surface cracks that are greater than 0.08 in. wide and 0.08 in. deep, the bearing shall be rejected.

3.1.7 Long-Duration Compression Tests on Bearings

The bearing shall be loaded in compression to 1.5 times its maximum design load for a minimum period of 15 hours. If, during the test, the load falls below 1.3 times the maximum design load, the test duration shall be increased by the period of time for which the load is below this limit. The bearing shall be examined visually at the end of the test while it is still under load. If the bulging pattern suggests laminate parallelism or a layer thickness that is outside the specified tolerances, or poor laminate bond, the bearing shall be rejected. If there are three or more separate surface cracks that are greater than 0.08 in. wide and 0.08 in. deep, the bearing shall be rejected.

3.1.8 Shear Modulus Tests on Material from Bearings

The shear modulus of the material in the finished bearing shall be evaluated by testing a specimen cut from it using the apparatus and procedure described in annex A of ASTM D4014, or a comparable nondestructive stiffness test may be conducted on a pair of finished bearings. The shear modulus shall fall within 15 percent of the specified value of 120 psi. If the test is conducted on finished bearings, the material shear modulus shall be computed from the measured shear stiffness of the bearings, taking due account of the influence on shear stiffness of bearing geometry and compressive load.

3.2 INSTALLATION

Bearings shall he placed on surfaces that are plane to within 1/16 in. and, unless the bearings are placed in opposing pairs, horizontal to within 0.01 radians. Any lack of parallelism between the top of the bearing and the underside of the girder that exceeds 0.01 radians shall be corrected by grouting or as otherwise directed by the Engineer. Exterior plates of the bearing shall not be welded unless at least 1 1/2 in. of steel exists between the weld and the elastomer. In no case shall the elastomer or the bond be subjected to temperatures higher than 400 Degrees F.

3.3 ANCHOR BOLTS

3.3.1 Materials

Anchor bolts shall be meet the requirements of ASTM A588.
Nuts shall meet the requirements of ASTM A194 or ASTM A563

3.3.2 Fabrication

Anchor bolts shall be wedged to secure a satisfactory grip upon the material used to embed them in the holes.

3.3.3 Installation

The Contractor shall install anchor bolts in anchor bolt wells and fill wells with portland cement grout conforming to ASTM C 1107 Grade A. Location of anchor bolts shall take into account any variation from mean temperature of the superstructure at time of setting and anticipated lengthening of
bottom chord or bottom flange due to dead load after setting, the intention being that, as near as practicable, at mean temperature and

under dead load, the anchor bolts at expansion bearings will center their slots. Care shall be taken that full and free movement of the superstructure at moveable bearings is not restricted by anchor bolts or nuts.

-- End of Section --

SECTION 05100

STEEL STRUCTURES

PART 1 GENERAL

1.1 REFERENCES

The publications listed below form a part of this specification to the extent referenced. The publications are referred to in the text by basic designation only.

AMERICAN SOCIETY FOR TESTING AND MATERIALS (ASTM)

ASTM A 108	(1990a) Steel Bars, Carbon, Cold Finished, Standard Quality
ASTM A 109	(1990) Steel, Strip, Carbon, Cold-Rolled
ASTM A 123	(1989a) Zinc (Hot-Dip Galvanized) Coatings on Iron and Steel Products
ASTM A 194	(1991) Carbon and Alloy Steel Nuts for Bolts for High-Pressure and High-Temperature Service
ASTM A 325	(1991) Structural Bolts, Steel, Heat Treated, 120/105 ksi Minimum Tensile Strength
ASTM A 370	(1992) Mechanical Testing of Steel Products
ASTM A 490	(1991a) Heat-Treated Steel Structural Bolts, 150 ksi Minimum Tensile Strength
ASTM A 563	(1991c) Carbon and Alloy Steel Nuts
ASTM A 709	(1991) Structural Steel for Bridges
ASTM F 436	(1991) Hardened Steel Washers
ASTM F 959	(1990) Compressible-Washer-Type Direct Tension Indicator for Use with Structural Fasteners

AMERICAN WELDING SOCIETY (AWS)

AWS D1.5	(1988) Bridge Welding Code

1.2 GENERAL

This work shall consist of furnishing, fabricating, and erecting steel structures and structural steel portions of other structures in accordance with these Specifications, the Special Provisions and the

details shown on the plans. The structural steel fabricating plant shall be certified under the AISC Quality Certification Program, Category 1. The fabrication of fracture critical members shall be Category 111. Painting shall conform to the provisions of Section 09901 PAINTING of these specifications. Falsework used in the erection of structural steel shall conform to the provisions of Section 03151 TEMPORARY WORKS of these specifications. Welding and weld qualification tests shall conform to the provisions of the ANSII/AASHTO/AWS D1.5 Bridge Welding Code.

1.3 SUBMITTALS

The Contractor shall expressly understand that the Contracting Officer's approval of the working drawings submitted by the Contractor covers the requirements for "strength and detail," and that the Contracting Officer assumes no responsibility for errors in dimensions. Working drawings must be approved by the Contracting Officer prior to performance of the work involved and such approval shall not relieve the Contractor of any responsibility under the contract for the successful completion of the work. Government approval is required for submittals with a "GA" designation; submittals having an "FIO" designation are for information only. The following shall be submitted in accordance with Section 01300 SUBMITTAL DESCRIPTIONS:

SD-09 Reports

Certified Mill Test Reports; GA-RE

The Contractor shall submit to the Contracting Officer a copy of all mill orders and certified mill test reports. Mill test reports shall show the chemical analysis and physical test results for each heat of steel used in the work.

SD-13 Certificates

Certificates of Compliance; GA-RE

With the approval of the Contracting Officer, certificates of compliance shall be furnished in lieu of mill test reports for material that normally is not supplied with mill test reports, and for items such as fills, minor gusset plates and similar material when quantities are small and the material is taken from stock.

Welded Stud Shear Connectors; GA-ED

SD-09 Reports

Charpy V-notch Impact Tests; GA-ED

Certified mill test reports for steels with specified impact values shall include, in addition to other test results, the results of Charpy V-notch impact tests. When fine grain practice is specified, the test report shall confirm that the material was so produced. Copies of mill orders shall be furnished at the time orders are placed with the manufacturer. Certified mill test reports and Certificates of Compliance shall be furnished prior to the start of fabrication of material covered by these reports. The Certificate of Compliance shall be signed by the

manufacturer and shall certify that the material is in conformance with the specifications to which it has been manufactured.

SD-04 Drawings

Shop Drawings; GA-ED

The Contractor shall submit copies of the detailed shop drawings to the Contracting Officer for approval. Working drawings shall be submitted sufficiently in advance of the start of the affected work to allow time for review by the Contracting Officer and corrections by the Contractor without delaying the work. Working drawings for steel structures shall give full detailed dimensions and sizes of component parts of the structure and details of all miscellaneous parts, such as pins, nuts, bolts, drains, etc. Where specific orientation of plates is required, the direction of rolling of plates shall be shown. Working drawings shall specifically identify each piece that is to be made of steel which is to be other than grade 36 steel.

Erection Drawings; GA-ED

The Contractor shall submit drawings illustrating fully his or her proposed method of erection. The drawings shall show details of all falsework bents, bracing, guys, dead-men, lifting devices, and attachments to the bridge members: sequence of erection, location of cranes and barges, crane capacities, location of lifting points on the bridge members, and weights of the members. The plan and drawings shall be complete in detail for all anticipated phases and conditions during erection. Calculations may be required to demonstrate that allowable stresses are not exceeded and that member capacities and final geometry will be correct.

PART 2 PRODUCTS

2.1 STRUCTURAL STEEL

Steel shall be furnished according to the following specifications. The grade or grades of steel to be furnished shall be as shown on the plans or specified. If not so shown or specified, structural carbon steel shall be furnished. All steel for use in main load-carrying member components subject to tensile stress shall conform to the applicable Charpy V-Notch Impact Test requirements of ASTM A 709.

2.1.1 Carbon Steel

Unless otherwise specified, structural carbon steel for bolted or welded construction shall conform to Structural Steel for Bridges, ASTM A 709, Grade 36.

2.2 HIGH-STRENGTH FASTENERS

High-strength bolts for structural steel joints including suitable nuts and plain hardened washers shall conform to ASTM A 325 Class B. The supplier shall provide a lot number appearing on the shipping package and a certification noting when and where all testing was done, including rotational capacity tests, and zinc thickness when galvanized bolts and nuts are used.

2.2.1 Maximum Hardness

The maximum hardness for ASTM A 325 bolts 1" or less in diameter shall be 33 HRC. The maximum tensile strength shall be 150 ksi for bolts 1 inch or less in diameter and 120 ksi for larger bolts.

2.2.1.1 Nuts

Nuts for ASTM A 325 bolts shall conform to ASTM A 563 or ASTM A 194.

2.2.2 Identifying Marks

ASTM A 325 for bolts and the specifications referenced therein for nuts require that bolts and nuts manufactured to the specification be identified by specific markings on the top of the bolt head and on one face of the nut. Head markings must identify the strength grade by the symbol "A325," the manufacturer and the type. Nut markings must identify the strength grade, the manufacturer.

2.2.3 Washers

Washers shall be hardened steel washers conforming to the requirements of ASTM F 436 and paragraph Requirement for Washers.

2.2.4 Load Indicator Devices

Load indicating devices may be used in conjunction with bolts, nuts and washers specified in Paragraph HIGH STRENGTH FASTENERS. Load indicating devices shall conform to the requirements of ASTM Specification for Compressible-Washer Type Direct Tension Indicators For Use with Structural Fasteners, ASTM F 959, except as provided in the following paragraph.

2.2.5 Alternate Design Direct Tension

Subject to the approval of the Contracting Officer, alternate design direct tension indicating devices may be used provided they satisfy the requirements of other requirements detailed in supplemental specifications provided by the manufacturer and subject to the approval of the Contracting Officer.

2.3 WELDED STUD SHEAR CONNECTORS

Shear connector studs shall conform to the requirements of Cold Finished-Carbon Steel Bars and Shafting, ASTM A 108, cold drawn bars, grades 1015, 1018, or 1020, either semi-or fully-killed. If flux retaining caps are used, the steel for the caps shall be of a low carbon grade suitable for welding and shall comply with Cold-Rolled Carbon Steel Strip, ASTM A 109. Tensile properties as determined by tests of bar stock after drawing or of finished studs shall conform to the following requirements:

Tensile Strength	60,000 psi (min.)
Yield Strength*	50,000 psi (min.)
Elongation	20% in 2 inches (min.)
Reduction of area	50% (min.)

* As determined by a 0.2% offset method.

2.3.1 Test Methods

Tensile properties shall be determined in accordance with the applicable sections of ASTM A 370, Mechanical Testing of Steel Products. Tensile tests of finished studs shall be made on studs welded to test plates using a test fixture similar to that shown in Figure 7.2 of ANSII /AASHTO/AWS Bridge Welding Code D1.5. If fracture occurs outside of the middle half of the gage length, the test shall be repeated.

2.3.2 Finish

Finished studs shall be of uniform quality and condition, free from injurious laps, fins, seams, cracks, twists, bends, or other injurious defects. Finish shall be as produced by cold drawing, cold rolling, or machining.

2.3.3 Certification

The manufacturer shall certify that the studs as delivered are in accordance with the material requirements of this section. Certified copies of in-plant quality control test reports shall be furnished to the Contracting Officer upon request.

2.4 GALVANIZING

When galvanizing is shown on the plans or specified in the special provisions, ferrous metal products, other than fasteners, shall be galvanized in accordance with the Specifications for Zinc (Hot-Galvanized) Coatings on Products Fabricated from Rolled, Pressed, and Forged Steel Shape Plates, Bars, and Strip, ASTM A 123.

PART 3 EXECUTION

3.1 STORAGE OF MATERIALS

Structural material, either plain or fabricated, shall be stored above the ground on platforms, skids, or other supports. It shall be kept free from dirt, grease, and other foreign matter, and shall be protected as far as practicable from corrosion.

3.2 PLATES

3.2.1 Direction of Rolling

Unless otherwise shown on the plans, steel plates for main members and splice plates for flanges and main tension members, not secondary members, shall be cut and fabricated so that the primary direction of rolling is parallel to the direction of the main tensile and/or compressive stresses.

3.2.2 Plate Cut Edges

3.2.2.1 Edge Planing

Sheared edges of plate more than 5/8 inch in thickness and carrying calculated stress shall be planed, milled, ground, or thermal cut to a depth of 1/4 inch.

3.2.2.2 Oxygen Cutting

Oxygen cutting of structural steel shall conform to the requirements of the current edition of the ANSII/AASHTO/AWS Bridge Welding Code D1.5.

3.2.2.3 Visual Inspection and Repair of Plate Cut Edges

Visual inspection and repair of plate cut edges shall be in accordance with the ANSII/AASHTO/AWS Bridge Welding Code D1.5.

3.2.3 Bent Plates

3.2.3.1 General

Unwelded, load-carrying, rolled-steel plates to be bent shall conform to the following: They shall be so taken from the stock plates that the bend line will be at right angles to the direction of rolling, except that cold-bent ribs for orthotropic-deck bridges may be bent with bend lines in the direction of rolling if permitted by the Contracting Officer. Before bending, the corners of the plates shall be rounded to a radius of 1/16 inch throughout the portion of the plate at which the bending is to occur.

3.2.3.2 Cold Bending

Cold bending shall be such that no cracking of the plate occurs. Minimum bend radii, measured to the concave face of the metal, are given in the following table:

Thickness in Inches	Up to	Over 1/2	Over 1 to	Over 1-1/2	Over 2-1/2
(a)	1/2	to 1	1-1/2	to 2-1/2	to 4
Bend radii for all grades of structural steel in this specification	2t	2-1/2t	3t	3-1/2t	4t

Allowance for springback of Grades 100 and 100W steels should be about three times that for Grade 36 steel. For break press forming, the lower die span should be at least 16 times the plate thickness. Multiple hits are advisable.

3.2.3.3 Hot Bending

If a radius shorter than the minimum specified for cold bending is essential, the plates shall be bent hot at a temperature not greater than 1200 F, except for Grades 100 and 100W if Grades 100 and 100W steel plates to be bent are heated to a temperature greater than 1125 F, they must be requenched and tempered in accordance with the producing mill's practice.

3.3 FIT OF STIFFENERS

End bearing stiffeners for girders and stiffeners intended as supports for concentrated loads shall have full bearing (either milled, ground or, on weldable steel in compression areas of flanges, welded as shown on the plans or specified) on the flanges to which they transmit load or from which they receive load. Intermediate stiffeners not intended to support concentrated loads, unless shown or specified otherwise, shall have a tight fit against the compression flange.

3.4 ABUTTING JOINTS

Abutting joints in compression members of trusses and columns shall be milled or saw-cut to give a square joint and uniform bearing. At other joints, not required to be faced, the opening shall not exceed 3/8 inch.

3.5 FACING OF BEARING SURFACES

The surface finish of bearing and base plates and other bearing surfaces that are to come in contact with each other or with concrete shall meet the ANSI surface roughness requirements as defined in ANSI B46.1, Surface Roughness, Waviness and Lay, Part 1:

Steel slabs.....	ANSI	2,000
Heavy plates in contact in shoes to be welded.....	ANSI	1,000
Milled ends of compression members, milled or ground ends of stiffeners and fillers.....	ANSI	500
Bridge roilers and rockers.....	ANSI	250
Pins and pin holes.....	ANSI	125
Sliding bearings.....	ANSI	125

3.6 STRAIGHTENING MATERIAL

The straightening of plates, angles, other shapes, and built-up members, when permitted by the Contracting Officer, shall be done by methods that will not produce fracture or other injury to the metal. Distorted members shall be straightened by mechanical means or, if approved by the Contracting Officer, by carefully planned procedures and supervised application of a limited amount of localized heat, except that heat straightening of Grades 70W, 100 and 100W steel members shall be done only under rigidly controlled procedures, each application subject to the approval of the Contracting Officer. In no case shall the maximum temperature exceed values in the following table:

Grade 70W>6" from weld	1075 F
Grade 70W<6" from weld	900 F
Grade 100 or 100W>6"from weld	1125 F
Grade 100 or 100W<6" from weld	950 F

In all other steels, the temperature of the heated area shall not exceed 1200 F as controlled by temperature indicating crayons, liquids, or bimetal thermometers. Parts to be heat straightened shall be substantially free of stress and from external forces, except stresses resulting from mechanical means used in conjunction with the application

of heat. Evidence of fracture following straightening of a bend or buckle will be cause for rejection of the damaged piece.

3.7 BOLT HOLES

3.7.1 Holes for High-Strength Bolts and Unfinished Bolts

All holes for bolts shall be either punched or drilled. Material forming parts of a member composed of not more than five thicknesses of metal may be punched 1/16 inch larger than the nominal diameter of the bolts whenever the thickness of the material is not greater than 3/4 inch for structural steel, 5/8 inch for high-strength steel or 1/2 inch for quenched and tempered alloy steel, unless subpunching and reaming are required under Paragraph Preparation of Field Connections. When there are more than five thicknesses or when any of the main material is thicker than 3/4 inch for structural steel, 5/8 inch for high-strength steel, or 1/2 inch for quenched and tempered alloy steel, all holes shall either be subdrilled and reamed or drilled full size. When required, all holes shall be either subpunched or subdrilled (subdrilled if thickness limitation governs) 3/16 inch smaller and, after assembling, reamed 1/16 inch larger or drilled full size to I/ 16 inch larger than the nominal diameter of the bolts. When shown on the plans, enlarged or slotted holes are allowed with high-strength bolts.

3.7.1.1 Punched Holes

The diameter of the die shall not exceed the diameter of the punch by more than 1/16 inch. If any holes must be enlarged to admit the bolts, such holes shall be reamed. Holes must be clean cut without torn or ragged edges.

3.7.1.2 Reamed or Drilled Holes

Reamed or drilled holes shall be cylindrical, perpendicular to the member, and shall comply with the requirements of Paragraph HOLES FOR HIGH-STRENGTH BOLTS AND UNFINISHED BOLTS as to size. Where practical, reamers shall be directed by mechanical means. Burrs on the outside surfaces shall be removed. Reaming and drilling shall be done with twist drills, twist reamers or rotobroach cutters. Connecting parts requiring reamed or drilled holes shall be assembled and securely held while being reamed or drilled and shall be match marked before disassembling.

3.7.1.3 Accuracy of Holes

Holes not more than 1/32 inch larger in diameter than the true decimal equivalent of the nominal diameter that may result from a drill or reamer of the nominal diameter are considered acceptable, the slightly conical hole that naturally results from punching operations is considered acceptable. The width of slotted holes which are produced by flame cutting or a combination of drilling or punching and flame cutting shall generally be not more than 1/32 inch greater than the nominal width. The flame cut surface shall be ground smooth.

3.7.2 Accuracy of Hole Group

3.7.2.1 Accuracy Before Reaming

All holes punched full size, subpunched, or subdrilled shall be so accurately punched that after assembling (before any reaming is done) a cylindrical pin 1/8 inch smaller in diameter than the nominal size of the punched hole may be entered perpendicular to the face of the member, without drifting, in at least 75 percent of the contiguous holes in the same plane. If the requirement is not fulfilled, the badly punched pieces will be rejected. If any hole will not pass a pin 3/16 inch smaller in diameter than the nominal size of the punched hole, this will be cause for rejection.

3.7.2.2 Accuracy After Reaming

When holes are reamed or drilled, 85 percent of the holes in any contiguous group shall, after reaming or drilling, show no offset greater than 1/32 inch between adjacent thicknesses of metal. All steel templates shall have hardened steel bushings in holes accurately dimensioned from the centerlines of the connection as inscribed on the template. The centerlines shall be used in locating accurately the template from the milled or scribed ends of the members.

3.7.3 Numerically-Controlled Drilled Field Connections

In lieu of subsized holes and reaming while assembled, or drilling holes full-size while assembled, the Contractor shall have the option to drill or punch bolt holes full-size in unassembled pieces and/or connections including templates for use with matching subsized and reamed holes by means of suitable numerically controlled (N/C) drilling or punching equipment. Full-size punched holes shall meet the requirements of Paragraph HOLES FOR HIGH-STRENGTH BOLTS AND UNFINISHED BOLTS. If N/C drilling or punching equipment is used, the Contractor, by means of check assemblies, will be required to demonstrate the accuracy of this drilling or punching procedure in accordance with the provisions of Paragraph CHECK ASSEMBLY-NUMERICALLY CONTROLLED DRILLING. Holes drilled or punched by N/C equipment shall be drilled or punched to appropriate size either through individual pieces, or drilled through any combination of pieces held tightly together.

3.7.4 Holes for Ribbed Bolts, Turned Bolts, or Other Approved Bearing Type Bolts

All holes for ribbed bolts, turned bolts, or other approved bearing-type bolts shall be subpunched or sub-drilled 3/16 inch smaller than the

nominal diameter of the bolt and reamed when assembled, or drilled to a steel template or, after assembling, drilled from the solid at the option of the Fabricator. In any case the finished holes shall provide a driving fit as specified on the plans or in the special provisions.

3.7.5 Preparation of Field Connections

Holes in all field connections and field splices of main members of trusses, arches, continuous beam spans, bents, towers (each face), plate girders, and rigid frames shall be subpunched or subdrilled and subsequently reamed while assembled or drilled full size to a steel template. Holes for field splices of rolled beam stringers continuous over floor beams or cross frames may be drilled full size unassembled to a steel template. All holes for floor beams or cross frames may be drilled full size unassembled to a steel template. All holes for floor beam and stringer field end connections shall be sub-punched and reamed while assembled or drilled full size to a steel template. Reaming or drilling full size of field connection holes through a steel template shall be done after the template has been located with utmost care as to position and angle and firmly bolted in place. Templates used for reaming matching members, or the opposite faces of a single member, shall be exact duplicates. Templates used for connections on like parts or members shall be so accurately located that the parts or members are duplicates and require no match-marking. For any connection, in lieu of subpunching and reaming or subdrilling and reaming, the fabricator may, at his option, drill holes full size with all thicknesses or material assembled in proper position.

3.8 CAMBER

Girders shall be cambered as shown on the camber diagram on the contract drawings. For plate girders, the web shall be cut to the prescribed camber with suitable allowance for shrinkage due to cutting, welding, and heat curving. However, subject to the approval of the Contracting Officer, moderate deviations from specified camber may be corrected by a carefully supervised application of heat.

3.8.1 Measurement of Curvature and Camber

Horizontal curvature and vertical camber shall be measured for final acceptance after all welding and heating operations are completed and the flanges have cooled to a uniform temperature. Horizontal curvature shall be checked with the girder in the vertical position.

3.9 MARKING AND SHIPPING

Each member shall be painted or marked with an erection mark for identification and an erection diagram showing these marks shall be furnished to the Contracting Officer. The Contractor shall furnish to the Contracting Officer as many copies of material orders, shipping statements, and erection diagrams as the Contracting Officer may direct. The weights of the individual members shall be shown on the statements. Members weighing more than 3 tons shall have the weights marked thereon. Structural members shall be loaded on trucks or cars in such a manner that they may be transported and unloaded at their destination without being excessively stressed, deformed, or other- wise damaged. Bolts of one length and diameter and loose nuts or washers of each size shall be

packed separately Pins, small parts and packages of bolts, washers, and nuts shall be shipped in boxes, crates, kegs, or barrels, but the gross weight of any package shall not exceed 300 pounds. A list and description of the contained material shall be plainly marked on the outside of each shipping container.

3.10 ASSEMBLY

3.10.1 Bolting

Surfaces of metal in contact shall be cleaned before assembling. The parts of a member shall be assembled, well pinned, and firmly drawn together before drilling, reaming, or bolting is commenced. Assembled pieces shall be taken apart, if necessary, for the removal of burrs and shavings produced by the operation. The member shall be free from twists, bends, and other deformation. The drifting done during assembling shall be only such as to bring the parts into position and not sufficient to enlarge the holes or distort the metal.

3.10.2 Welded Connections

Surfaces and edges to be welded shall be smooth, uniform, clean and free of defects which would adversely affect the quality of the weld. Edge preparation shall be done in accordance with ANSII/AASHTO/AWS Bridge Welding Code D1.5.

3.10.3 Preassembly of Field Connections

3.10.3.1 General

Field connections of main members of trusses, arches, continuous beams, plate girders, bents, towers and rigid frames shall be preassembled prior to erection as necessary to verify the geometry of the completed structure or unit and to verify or prepare field splices. Attaining accurate geometry is the responsibility of the Contractor and he shall propose an appropriate method of preassembly for approval by the Contracting Officer. The method and details of preassembly shall be consistent with the erection procedure shown on the erection plans and camber diagrams prepared by the Contractor and approved by the Contracting Officer. As a minimum, the preassembly procedure shall consist of assembling three contiguous panels accurately adjusted for line and camber. Successive assemblies shall consist of at least one section or panel of the previous assembly (repositioned if necessary and adequately pinned to assure accurate alignment) plus two or more sections or panels added at the advancing end. In the case of structures longer than 150 feet, each assembly shall be not less than 150 feet long regardless of the length of individual continuous panels or sections. At the option of the fabricator, sequence of assembly may start from any location in the structure and proceed in one or both directions so long as the preceding requirements are satisfied.

3.10.3.2 Bolted Connections

For bolted connections holes shall be prepared as outlined in Paragraph BOLT HOLES. Where applicable, major components shall be assembled with milled ends of compression members in full bearing and then shall have their subsized holes reamed to the specified size while the connections

are assembled.

3.10.3.3 Check Assembly-Numerically Controlled Drilling

When the contractor elects to use numerically controlled drilling, a check assembly shall be required for each major structural type of each project, unless otherwise designated on the plans or in the special provisions, and shall consist of at least three contiguous shop sections or, in a truss, all members in at least three contiguous panels but not less than the number of panels associated with three contiguous chord lengths (i.e., length between field splices). Check assemblies should be based on the proposed order of erection, joints in bearings, special complex points, and similar considerations. Special points could be the portals of skewed trusses, for example. The check assemblies shall preferably be the first sections of each major structural type to be fabricated. Shop assemblies other than the check assemblies will not be required. If the check assembly fails in some specific manner to demonstrate that the required accuracy is being obtained, further check assemblies may be required by the Contracting Officer for which there shall be no additional cost to the Government. Each assembly, including camber, alignment, accuracy of holes, and fit of milled joints, shall be approved by the Contracting Officer before reaming is commenced or before an N/C drilled check assembly is dismantled.

3.10.3.4 Field Welded Connections

For field welded connections the fit of members including the proper space between abutting flanges shall be prepared or verified with the segment preassembled in accordance with Paragraph PREASSEMBLY OF FIELD CONNECTIONS.

3.10.3.5 Match Marking

Connecting parts preassembled in the shop to assure proper fit in the field shall be match-marked, and a diagram showing such marks shall be furnished to the Contracting Officer.

3.10.3.6 Connections Using High Strength Bolts

3.10.3.6.1 General

This article covers the assembly of structural joints using ASTM A 325 or ASTM A 490 high-strength bolts, or equivalent fasteners, tightened to a high tension. The bolts are used in holes conforming to the requirements of Paragraph BOLT HOLES.

3.10.3.6.2 Bolted Parts

All material within the grip of the bolt shall be steel, there shall be no compressible material such as gaskets or insulation within the grip. Bolted steel parts shall fit solidly together after the bolts are tightened, and may be coated or uncoated. The slope of the surfaces of parts in contact with the bolt head or nut shall not exceed 1:20 with respect to a plane normal to the bolt axis.

3.10.3.6.3 Surface Conditions

At the time of assembly, all joint surfaces, including surfaces adjacent to the bolt head and nut, shall be free of scale, except tight mill scale, and all be free of dirt or other foreign material. Burrs that would prevent solid seating of the connected parts in the snug tight condition shall be removed. In slip-critical connections, joints shall be blast cleaned and coated with a paint which has been qualified as Class B in accordance with AASHTO. Coated joints shall not be assembled before the coating has cured.

3.10.3.6.4 Installation

Fasteners of appropriately assigned lot numbers shall be assembled together when installed. Such fasteners shall be protected from dirt and moisture at the job site. Only as many fasteners as are anticipated to be installed and tightened during a work shift shall be taken from protected storage. Fasteners not used shall be returned to protected storage at the end of the shift. Fasteners shall not be cleaned of lubricant that is required to be present in as-delivered condition. Fasteners for slip-critical connections which accumulate rust or dirt resulting from job site conditions shall be cleaned and relubricated prior to installation. A tension measuring device (a Skidmore-Wilhelm calibrator or other acceptable bolt tension indicating device) shall be at all job sites where high-strength fasteners are being installed and tightened. The tension measuring device shall be used to perform the rotational-capacity test and to confirm (1) the suitability to satisfy the requirements of Table 3.12A of the complete fastener assembly, including lubrication if required to be used in the work, (2) calibration of the wrenches, if applicable, and (3) the understanding and proper use by the bolting crew of the method of tightening to be used. For short grip bolts, direct tension indicators (DTI) with solid plates may be used to perform this test. The DTI shall be first checked with a longer grip bolt in the Skidmore- Wilhelm calibrator. The frequency of confirmation testing, the number of tests to be performed and the test procedure shall be as specified in Paragraphs TURN-OF-NUT TIGHTENING through DIRECT TENSION INDICATOR TIGHTENING, as applicable. The accuracy of the tension measuring device shall be confirmed by an approved testing agency at least annually. Fasteners together with washers of size and quality specified, located as required below, shall be installed in properly aligned holes and tightened by any of the methods described in Paragraphs TURN-OF-NUT TIGHTENING through DIRECT TENSION INDICATOR TIGHTENING to at least the minimum tension specified in Table 3.12A when all the fasteners are tight. Tightening may be done by turning the bolt while the nut is prevented from rotating when it is impractical to turn the nut. Impact wrenches, if used, shall be of adequate capacity and sufficiently supplied with air to perform the required tightening of each bolt in approximately 10 seconds. ASTM A 490 fasteners and galvanized ASTM A 325 fasteners shall not be reused. Other ASTM A 325 bolts may be reused if approved by the Contracting Officer. Touching up or retightening previously tightened bolts which may have been loosened by the tightening of adjacent bolts shall not be considered as reuse provided the snugging up continues from the initial position and does not require greater rotation, including the tolerance, than that required by Table 3.12B.

3.10.3.6.5 Rotational-Capacity Tests

High-strength fasteners, black and galvanized, shall be subjected to job-site rotational-capacity tests performed and shall meet the following requirements:

a. After tightening to a snug tight condition, as defined in Paragraph TURN-OF-NUT TIGHTENING, the fastener shall be tightened two times the required number of turns indicated in Table 3.12B, in a Skidmore-Wilhelm Calibrator, or equivalent tension measuring device, without stripping or failure.

b. During this test, the maximum recorded tension shall be equal to or greater than the turn test tension which is 1.15 times the required fastener tension indicated in Table 3.12A.

c. The measured torque at a tension "P," after exceeding the turn test tension required above in b., shall not exceed the value obtained by the following equation:

$$\text{Torque} = 0.25\ PD$$

where

Torque = Measured torque (ft-lbs)
p = Measured bolt tension (lbs)
D = Nominal diameter (ft)

For rotational-capacity tests, the use of washers is required even though their use may not be required in the actual installation.

3.11 REQUIREMENT FOR WASHERS

Where the outer face of the bolted parts has a slope greater than 1:20 with respect to a plane normal to the bolt axis, a hardened bevelled washer shall be used to compensate for the lack of parallelism. Hardened beveled washers for American Standard Beams and Channels shall be required and shall be square or rectangular, shall conform to the requirements of ASTM F 436, and shall taper in thickness. Where necessary, washers may be clipped on one side to a point not closer than 7/8 inch of the bolt diameter from the center of the washer. Hardened washers are not required for connections using ASTM A 325 and ASTM A 490 bolts except as follows:

a. Hardened washers shall be used under the element turned in tightening when the tightening is to be performed by calibrated wrench method.

b. Irrespective of the tightening method, hardened washers shall be used under both the head and the nut when ASTM A 490 bolts are to be installed in material having a specified yield point less than 40 ksi.

c. Where ASTM A 325 bolts of any diameter or ASTM A 490 bolts equal to or less than I inch in diameter are to be installed in oversize or short-slotted holes in an outer ply, a hardened washer conforming to ASTM F 436 shall be used.

d. When ASTM A 490 bolts over 1 inch in diameter are to be installed in an oversize or short-slotted hole in an outer ply, hardened washers conforming to ASTM F 436 except with 5/16-inch minimum thickness shall be used under both the head and the nut in lieu of standard thickness hardened washers. Multiple hardened washers with combined thickness equal to or greater than 5/16-inch do not satisfy this requirement.

e. Where ASTM A 325 bolts of any diameter or ASTM A 490 bolts equal to or less than I inch in diameter are to be installed in a long slotted hole in an outer ply, a plate washer or continuous bar of at least 5/16-inch thickness with standard holes shall be provided. These washers or bars shall have a size sufficient to completely cover the slot after installation and shall be of structural grade material, but need not be hardened except as follows. When ASTM A 490 bolts over 1 inch in diameter are to be used in long slotted holes in external plies, a single hardened washer conforming to ASTM F 436 but with 5/16-inch minimum thickness shall be used in lieu of washers or bars of structural grade material. Multiple hardened washers with combined thickness equal to or greater than 5/16-inch do not satisfy this requirement.

f. Alternate design fasteners with a geometry which provides a bearing circle on the head or nut with a diameter equal to or greater then the diameter of hardened washers meeting the requirements of ASTM F 436 satisfy the requirements for washers specified herein and may be used without washers.

3.11.1 Turn-of-Nut Tightening

When turn-of-nut tightening is used, hardened washers are not required except as may be specified in Paragraph REQUIREMENT FOR WASHERS. A representative sample of not less than three bolt and nut assemblies of each diameter, length and grade to be used in the work shall be checked at the start of work in a device capable of indicating bolt tension. The test shall demonstrate that the method for estimating the snug tight condition and controlling the turns from snug tight to be used by the bolting crew develops a tension not less than five percent greater than the tension required by Table 3.12A. Periodic retesting shall be performed when ordered by the Contracting Officer. and brought to a snug tight condition. Snug tight is defined as the tightness that exists when the plies of the joint are in firm contact. This may be attained by a few impacts of an impact wrench or the full effort of a man using an ordinary spud wrench. most rigid part of the connection to the free edges, and then the bolts of the connection shall be retightened in a similar systematic manner as necessary until all bolts are simultaneously snug tight and the connection is fully compacted. Following this initial operation all bolts in the connection shall be tightened further by the applicable amount of rotation specified in Table 11.5B. During the tightening operation there shall be no rotation of the part not turned by the wrench. Tightening shall progress systematically from the most rigid part of the joint to its free edges.

3.11.2 Calibrated Wrench Tightening

Calibrated wrench tightening may be used only when installation procedures are calibrated on a daily basis and when a hardened washer is used under the element turned in tightening. Standard torques determined

from tables or from formulas which are assumed to relate torque to tension are not acceptable. When calibrated wrenches are used for installation, they shall be set to provide a tension not less than 5 percent in excess of the minimum tension specified in Table 3.12A. The installation procedures shall be calibrated at least once each working day for each bolt diameter, length and grade using fastener assemblies that are being installed in the work. Calibration shall be accomplished in a device capable of indicating actual bolt tension by tightening three typical bolts of each diameter. length and grade from the bolts being installed and with a hardened washer from the washers being used in the work under the element turned in tightening. Wrenches shall be recalibrated when significant difference is noted in the surface condition of the bolts, threads, nuts or washers. It shall be verified during actual installation in the assembled steel work that the wrench adjustment selected by the calibration does not produce a nut or bolt head rotation from snug tight greater than that permitted in Table 3.12B. If manual torque wrenches are used, nuts shall be turned in the tightening direction when torque is measured. When calibrated wrenches are used to install and tension bolts in a connection, bolts shall be installed with hardened washers under the element turned in tightening bolts in all holes of the connection and brought to a snug tight condition. Following this initial tightening operation, the connection shall be tightened using the calibrated wrench. Tightening shall progress systematically from the most rigid part of the joint to its free edges. The wrench shall be returned to "touch up" previously tightened bolts which may have been relaxed as a result of the subsequent tightening of adjacent bolts until all bolts are tightened to the prescribed amount.

3.11.3 Direct Tension Indicator Tightening

When tightening of bolts using direct tension indicator devices is used, a representative sample of not less than three devices for each diameter and grade of fastener to be used in the work shall be assembled in a calibration device capable of indicating bolt tension. The test assembly shall include flat-hardened washers, if required in the actual connection, arranged as those in the actual connections to be tensioned. The calibration test shall demonstrate that the device indicates a tension not less than 5 percent greater than that required by Table 3.12A. Manufacturer's installation procedure shall be followed for installation of bolts in the calibration device and in all connections. Special attention shall be given to proper installation of flat-hardened washers when direct tension indicator devices are used with bolts installed in oversize or slotted holes and when the load indicating devices are used under the turned element. When bolts are installed using direct tension indicators meeting the requirements of ASTM F 959, bolts shall be installed in all holes of the connection and brought to snug tight conditions. Snug tight is indicated by partial compression of the direct tension indicator protrusions. All fasteners shall then be tightened, progressing systematically from the most rigid part of the connection to the free edges in a manner that will minimize relaxation of previously tightened fasteners.

TABLE 3.12A
Required Fastener Tension
Minimum Bolt Tension in Pounds*

Bolt Size inches	ASTM A 325	ASTM A 490
1/2	12000	15000
5/8	19000	24000
3/4	28000	35000
7/8	39000	49000
1	51000	64000
1-1/8	56000	80000
1-1/4	71000	102000
1-3/8	85000	121000
1-1/2	103000	148000

*Equal to 70% of specified minimum tensile strength of bolts (as specified in ASTM Specifications for tests of full-size A325 and A 490 bolts with UNC threads loaded in axial tension) rounded to the nearest kip.

TABLE 3.12B

Nut Rotation from the Snug-Tight Condition a,b
Geometry of Outer Faces of Bolted Parts

Bolt length measured from underside of head to end of bolt.	Both faces normal to bolt axis.	One face normal to bolt axis and other face sloped not more than 1:20. Bevel washer not used.	Both faces sloped not more than 1:20 from normal to bolt axis. Bevel washers not used.
Up to and including 4 diameters	1/3 turn	1/2 turn	2/3 turn
Over 4 diameters but not exceeding 8 diameters	1/2 turn	2/3 turn	5/6 turn
Over 8 diameters but not exceeding 12 diametersc	2/3 turn	5/6 turn	1 turn

a Nut rotation is relative to bolt, regardless of the element (a) being turned. For bolts installed by 1/2 turn and less, the tolerance should be plus or minus 30 degrees; for bolts installed by 2/3 turn and more, the tolerance should be plus or minus 45 degrees.

b Applicable only to connections in which all material within grip of the bolt is steel.

c No research work has been performed by the Research Council Riveted and Bolted Structural Joints to establish the turn-of-nut procedure when bolt lengths exceed 12 diameters.
Therefore, the required rotation must be determined by actual tests in a suitable tension device simulating the actual conditions.

In some cases, proper tensioning o f the bolts may require more than a single cycle of systematic partial tightening prior to final tightening to deform the protrusion to the specified gap.

3.11.4 Inspection

Either the Contracting Officer or the Contractor, in the presence of the Contracting Officer at the Contracting Officer's option, shall inspect the tightened bolts using an inspection torque wrench. Three bolts of the same grade, size, and condition as those under inspection shall be placed individually in a device calibrated to measure bolt tension. This calibration operation shall be done at least once each inspection day. There shall be a washer under the part turned in tightening each bolt if washers are used on the structure. If washers are not used on the structure, the material used in the tension measuring device which abuts the part turned shall be of the same specification as that used on the structure. In the calibrated device, each bolt shall be tightened by any convenient means to the specified tension. The inspecting wrench shall then be applied to the tightened bolt to determine the torque required to turn the nut or head 5 degrees (approximately 1 inch at a 12-inch radius) in the tightening direction. The average of the torque required for all three bolts shall be taken as the job-inspection torque. Ten percent (at least two) of the tightened bolts on the structure represented by the test bolts shall be selected at random in each connection. The job-inspection torque shall then be applied to each with the inspecting wrench turned in the tightening direction. If this torque turns no bolt head or nut, the bolts in the connection will be considered to be properly tightened. But if the torque turns one or more bolt heads or nuts, the job-inspection torque shall then be applied to all bolts in the connection. Any bolt whose head or nut turns at this stage shall be tightened and reinspected. The Contractor may, however, retighten all the bolts in the connection and resubmit it for inspection.

3.12 WELDING

Welding, welder qualifications, prequalification of weld details and inspection of welds shall conform to the requirements of the ANSII/AASHTO/AWS Bridge Welding Code D1.5. Brackets, clips, shipping devices or other material not required by the plans or special provisions shall not be welded or tacked to any member unless shown on the shop drawings and approved by the Contracting Officer.

3.13 ERECTION

3.13.1 General

The Contractor shall provide all tools, machinery and equipment necessary to erect the structure. Falsework and forms shall be in accordance with the requirements of Section 03151 TEMPORARY WORKS.

3.13.1.1 Handling and Storing Materials

Material to be stored at the job site shall be placed on skids above the ground. It shall be kept clean and properly drained. Girders and beams shall be placed upright and shored. Long members, such as columns and chords, shall be supported on skids placed near enough together to prevent injury from deflection. If the contract is for erection only, the Contractor shall check the material turned over to him or her against the shipping lists and report promptly in writing any shortage or injury discovered. The Contractor shall be responsible for the loss of any material while in his or her care, or for any damage caused to it after being received by the Contractor.

3.13.1.2 Bearings and Anchorages

Bridge bearings shall be furnished and installed in conformance with Section 05018, "Bearing Devices," of these Specifications.

3.13.1.3 Erection Procedure

3.13.1.3.1 Conformance to Drawings

The erection procedure shall conform to the erection drawings submitted in accordance with Paragraph SUBMITTALS. Any modifications to or deviations from this erection procedure will require revised drawings and verification of stresses and geometry.

3.13.1.3.2 Erection Stresses

Any erection stresses that are induced in the structure as a result of the use of a method of erection or equipment which differs from that shown on the plans or specified, and which will remain in the finished structure as locked-in stresses shall be accounted for by the Contractor. He or she may provide additional material at his or her expense to keep both temporary and final stresses within the allowable limits used in design. The Contractor will be responsible for providing temporary bracing or stiffening devices to accommodate handling stresses in individual members or segments of the structure during erection.

3.13.1.3.3 Maintaining Alignment and Camber

During erection the Contractor will be responsible for supporting segments of the structure in a manner that will produce the proper alignment and camber in the completed structure. Cross frames and diagonal bracing shall be installed as necessary during the erection process to provide stability and assure correct geometry. Temporary bracing, if necessary at any stage of erection, shall be provided by the Contractor.

3.13.1.4 Field Assembly

The parts shall be accurately assembled as shown on the plans or erection drawings, and any match-marks shall be followed. The material shall be carefully handled so that no parts will be bent, broken, or otherwise damaged. Hammering which will injure or distort the members shall not be done. Bearing surfaces and surfaces to be in permanent contact shall be

cleaned before the members are assembled. Splices and field connections shall have one-half of the holes filled with bolts and cylindrical erection pins (half bolts and half pins) before installing and tightening the balance of high-strength bolts. Splices and connections carrying traffic during erection shall have three-fourths of the holes so filled. Fitting-up bolts may be the same high-strength bolts used in the installation. If other fitting-up bolts are used they shall be of the same nominal diameter as the high- strength bolts, and cylindrical erection pins shall be 1/32 inch larger.

3.13.1.5 Misfits

The correction of minor misfits involving minor amounts of reaming, cutting, and chipping will be considered a legitimate part of the erection. However, any error in the shop fabrication or deformation resulting from handling and transporting will be cause for rejection. The Contractor shall be responsible for all misfits, errors, and damage and shall make the necessary corrections and replacements.

-- End of Section --

05300 INTAKE DRAINAGE SYSTEM

A. REFERENCES: The publications listed below form a part of this specification to the extent referenced. The publications are referred to in the text by basic designation only.

AMERICAN SOCIETY FOR TESTING AND MATERIALS (ASTM)

ASTM A 126 (1995; R 2001) Standard Specification for Gray Iron Castings for Valves, Flanges, and Pipe Fittings

ASTM A 193 (1989) Alloy-Steel and Stainless Steel Bolting Materials for High-Temperature Service

ASTM A 276 (2000a) Standard Specification for Stainless Steel Bars and Shapes

AMERICAN SOCIETY OF MECHANICAL ENGINEERS (ASME)

ASME B16.21 (1978) Nonmetallic Flat Gaskets for Pipe Flanges

AMERICAN WELDING SOCIETY (AWS)

AWS D1.1 (1998) Structural Welding Code - Steel

B. GENERAL REQUIREMENTS:

1. Definitions. The Dam Intake Drainage System shall be defined as the system/structure which provides for dissipation of the confined waters behind each dam structure. The basics of the system are indicated on the plans and consist of an intake, conduit, control valve, trash/intake protection structure, and valve access. The preceding is not, nor is it intended to be, a comprehensive definition and this specification pertains only to the valve and its control for the drainage system around the dam structure.

2. Standard Products. Materials and equipment shall be the standard products of a manufacturer regularly engaged in the manufacture of the products specified. Items of equipment shall essentially duplicate equipment that has been in satisfactory use at least 2 years prior to bid opening.

3. Verification of Dimensions. The Contractor shall become familiar with details of the work, verify dimensions in the field, and advise the Contracting Officer of any discrepancy before performing any work.

4. Welding. Materials shall be welded in accordance with qualified procedures using performance-qualified welders and welding operators. Procedures and welders shall be qualified in accordance with AWS D1.1. Structural members shall be welded in accordance with **Specification Section: MISCELLANEOUS METAL**.

C. SUBMITTALS:

1. Welding. The following shall be submitted for Government review/approval:

A copy of qualified procedures and a list of names and identification symbols of qualified welders and welding operators.

(a) Drawings: Dam Intake Drainage System; Submit for Government approval.

Detail drawings consisting of illustrations, schedules, performance charts, instructions, brochures, diagrams, and other information to illustrate the requirements and operations of each product or item. Detail drawings for the complete dam intake drain system shall including piping/drainage layouts and locations of connections; dimensions for roughing-in, foundation, and support points; and schematic diagrams. Detail drawings shall indicate clearances required for maintenance and operation. Where piping and equipment are to be supported other than as indicated, details shall include loadings and proposed support methods.

(b) Instructions: Dam Intake Drainage System; Submit for Government review.

Diagrams, instructions, and other sheets proposed for posting.

(c) Certificates: Materials and Equipment; Submit for Government review.

Where materials or equipment are specified to comply with requirements of ASME or other standards, proof of such compliance shall be submitted. The label or listing of the specified agency will be acceptable evidence. In lieu of the label or listing, a written certificate may be submitted from an approved, nationally recognized testing organization equipped to perform such services, stating that the items have been

tested and conform to the requirements and testing methods of the specified agency. Where equipment if specified to conform to requirements of the ASME Boiler and Pressure Vessel Code, the design, fabrication, and installation shall conform to the code.

2. Bolts. The following shall be submitted for Government review:

Written certification that the bolts furnished comply with the requirements of this specification, provided by the bolt manufacturer. The certification shall include illustrations of product-required markings, the date of manufacture, and the number of each type of bolt to be furnished based on this certification.

3. Operation and Maintenance Manuals: Dam Intake Drainage System. The following shall be submitted for Government review:

Six copies of the operation manual outlining the step-by-step procedures required for drainage system startup, operation and shutdown. The manual shall include the manufacturer's name, model number, service manual, parts list, and brief description of all equipment and their basic operating features. Six copies of the maintenance manual listing routine maintenance procedures, possible breakdowns and repairs. The manual shall include piping and equipment layout of the system as installed.

D. MATERIALS: Materials for various services shall be in accordance with this specification in addition to other referenced specifications. All fittings shall be compatible with the applicable materials specified.

1. Gate. Gate shall be provided and installed on the dam intake structure drainage location where indicated. Gate shall be self-contained with yoke, operator and rising stem extensions.

(a) Gate Frame. The gate frame shall be a rigid, welded unit, composed of guide rails, head bar and headrails with sufficient clear opening. The frame and cover shall be cast iron with machined seating faces. The frame shall be flatback or spigotback mounting. Grooves shall be cast on the vertical sides of the cover to match the guide angles. The cover shall be of domed design to withstand a maximum seating head of 20 feet and an unseating head of 10 feet. The guide rails and head rails shall be a minimum of 1/4 inch thick stainless steel, designed and built to withstand

the total thrust of the gate slide due to water pressure and wedge action. There shall be one adjustable cast iron wedge per side, located on the horizontal centerline of the gate. A heavy cast iron arch shall be provided and bolted to the gate. The ends of the arch shall contain integrally cast wedges, which shall wedge in beneath the other half of the wedge system and attached to the guide rails. The wedges shall have smooth bearing surfaces and shall be adjustable to insure effective contact between gate seating surfaces.

(b) Stem. The gate stem shall be as required for the intended service, of suitable length and ample strength for the conditions involved. The stem diameter shall be capable of withstanding twice the rated output of the operator at 40 pound pull, and shall be supported such that the L/r (length/radius) for the unsupported part of the stem shall not exceed 200. When rising stem extension is used, the stem extension shall be supported with clamp type stem guides such that a rigid installation shall be provided. Bronze collars shall be attached to the stem to reduce clearance between ID and stem, and shall be so spaced so that L/r ratio of stem does not exceed 200.

(c) Operator. The manually operated lifting mechanism shall be as indicated. Handwheel type lift shall be without gear reduction. The lift nut shall be flanged and supported on non-metallic thrust washers or bearings to take the thrust developed during opening and closing of the gate. The operating wheel shall be capable of removal by simple means to prevent vandalism of the gate/drainage structure and/or theft of the wheel. An arrow shall be cast on the handwheel to indicate the direction of rotation to open the gate. A maximum effort of 40 pounds shall be required to operate the gate after it is unseated, based on the maximum specified operating head (20 feet).

(d) Materials and Painting. Frames and cover (slide/gate) shall be fabricated from cast iron ASTM A126, Class B. Rails and yoke shall be fabricated from ASTM A276, A304 or A316 type stainless steel. Fasteners and anchor bolts shall be ASTM A276, A304 or A316 type stainless steel. Operating stem shall be ASTM A276, A304 or A316 type stainless steel. All materials, with the exception of stainless steel and rubber, shall be painted with an immersion approved coating consisting of a coal tar epoxy or a two-part epoxy and white metal blast surface preparation. All components shall be shop painted. No painting will be permitted in the field other than touch-up. Galvanizing is not acceptable.

E. INSTALLATION:

1. All products shall be installed as indicated and in accordance with this specification and the manufacturer's requirements. Products shall be stored in protected areas free from corrosive and damaging conditions (i.e. atmosphere, weather, humidity, construction traffic, etc.) until ready for installation. Care shall be taken during installation to prevent any and all damage to the paint coatings, seal surfaces, valve operation, stems, etc.

2. Piping/Conduit Structure. All piping to construct the drainage portion of the intake structure shall be standard Reinforced Concrete Pipe unless indicated otherwise on contract drawings. Reinforced Concrete Pipe shall be in accordance with SECTION 02630 STORM-DRAINAGE SYSTEM.

3. Operational Test. Upon completion of and prior to acceptance of the installation, the Contractor shall subject the system to operating tests to demonstrate satisfactory functional performance and operational efficiency. Such operating tests shall cover a period of not less than 2 hours and shall include the following information in a report with conclusion as to the adequacy of the system:

(a) Time, date, and duration of test.
(b) Water height at the intake structure.
(c) Operation of gate through full cycle.
(d) Discharge characteristics at 1/4, 1/2, 3/4 and full open.
(e) Complete operation of each system.

F. PAYMENT: Payment for this work shall be made at the contract price bid per lump sum of "Dam Intake Drain Structure" as listed in the Itemized Proposal. The RCP associated with the Dam Intake Structure shall be considered part of the lump sum.

05500 MISCELLANEOUS METAL

A. REFERENCES: The publications listed below form a part of this specification to the extent referenced. The publications are referred to in the text by basic designation only.

AMERICAN SOCIETY FOR TESTING AND MATERIALS (ASTM)

ASTM A 6	(1993b) General Requirements for Rolled Steel Plates, Shapes, Sheet Piling, and Bars for Structural Use
ASTM A 36	(1993a) Structural Steel
ASTM A 47	(1989) Ferritic Malleable Iron Castings
ASTM A 48	(1990) Gray Iron Castings
ASTM A 123	(1989a) Zinc (Hot-Dip Galvanized) Coatings on Iron and Steel Products
ASTM A 193	(1990) Alloy-Steel and Stainless Steel Bolting Materials for High-Temperature Service.
ASTM A 240	(1990) Heat-Resisting Chromium and Chromium-Nickel Stainless Steel Plate, Sheet, and Strip for Pressure Vessels
ASTM A 276	(1990) Stainless and Heat-Resisting Steel Bars and Shapes
ASTM A 283	(1993) Low and Intermediate Tensile Strength Carbon Steel Plates
ASTM A 307	(1993a) Carbon Steel Bolts and Studs, 60000 PSI Tensile Strength
ASTM A 325	(1993) Structural Bolts, Steel, Treated,

	120/105 ksi Minimum Tensile Strength
ASTM A 446	(1993) Steel Sheet, Zinc-Coated (Galvanized) by the Hot-Dip Process, Structural (Physical) Quality
ASTM A 475	(1989) Zinc-Coated Steel Wire Strand
ASTM A 490	(1993) Heat-Treated Steel Structural Bolts, 150 ksi Minimum Tensile Strength
ASTM A 525	(1993) General Requirements for Steel Sheet, Zinc-Coated (Galvanized) by the Hot-Dip Process
ASTM A 514	(1993a; Errata) High-Yield-Strength, Quenched and Tempered Alloy Steel Plate, Suitable for Welding
ASTM A 563	(1993) Carbon and Alloy Steel Nuts
ASTM F 436	(1993) Hardened Steel Washers
ASTM F 594	(1990) Stainless Steel Nuts
ASTM F 844	(1990) Washers, Steel, Plain (Flat), Unhardened for General Use

AMERICAN SOCIETY OF MECHANICAL ENGINEERS (ASME)

ASME B18.2.2	(1987) Square and Hex Nuts (Inch Series)
ASME B18.21.1	(1990) Lock Washers (Inch Series)
ASME B46.1	(1985) Surface Texture (Surface Roughness, Waviness and Lay)

AMERICAN WELDING SOCIETY (AWS)

AWS A2.4	(1993) Standard Symbols for Welding, Brazing and Nondestructive Examination
AWS D1.1	(1994) Structural Welding Code - Steel

FEDERAL SPECIFICATIONS (FS)

FS RR-C-271	(Rev D) Chains and Attachments, Welded and Weldless
FS RR-G-1602	(Rev C) Grating, Metal, Other Than Bar Type (Floor, Except for Naval Vessels)

NATIONAL ASSOCIATION OF ARCHITECTURAL METAL MANUFACTURERS (NAAMM)

NAAMM-01	(1988) Metal Finishes Manual for Architectural and Metal Products

B. SUBMITTALS:

1. Drawings. The following shall be submitted for Government approval.

(a) Miscellaneous Metal Items.

Detail drawings indicating material thickness, type, grade, and class; dimensions; and construction details. Drawings shall include catalog cuts, erection details, manufacturer's descriptive data and installation instructions, and templates. Detail drawings for all items covered by this specification.

2. List of Materials. The following shall be submitted to the Government for information only:

(a) Miscellaneous Metal Items.

The Contractor shall furnish copies of all purchase and mill orders, shop

orders and work orders. The Contractor shall furnish a list designating the material to be used for each item at the time of submittal of shop drawings.

C. REQUIREMENTS:

1. General. The Contractor shall verify all measurements and shall take all field measurements necessary before fabrication. Welding to or on structural steel shall be in accordance with AWS D1.1. Items specified to be galvanized, when practicable and not indicated otherwise, shall be hot-dip galvanized after fabrication. Galvanizing shall be in accordance with ASTM A 123, ASTM A 446, or ASTM A 525, as applicable. Exposed fastenings shall be compatible materials, shall generally match in color and finish, and shall harmonize with the material to which fastenings are applied. Materials and parts necessary to complete each item, even though such work is not definitely shown or specified, shall be included. Poor matching of holes for fasteners shall be cause for rejection. Fastenings shall be concealed where practicable. Thickness of metal and details of assembly and supports shall provide strength and stiffness. Joints exposed to the weather shall be formed to exclude water.

2. Dissimilar Materials. Where dissimilar metals are in contact, or where aluminum is in contact with concrete, mortar, masonry, wet or pressure-treated wood, or absorptive materials subject to wetting, the surfaces shall be protected with a coat of bituminous paint or asphalt varnish.

3. Workmanship. Miscellaneous metalwork shall be well formed to shape and size, with sharp lines and angles and true curves. Drilling and punching shall produce clean true lines and surfaces. Welding shall be continuous along the entire area of contact except where tack welding is permitted. Exposed connections of work in place shall not be tack welded. Exposed welds shall be ground smooth. Exposed surfaces of work in place shall have a smooth finish, and unless otherwise approved, exposed riveting shall be flush. Where tight fits are required, joints shall be milled. Corner joints shall be coped or mitered, well formed, and in true alignment. Work shall be accurately set to established lines and elevations and securely fastened in place. Installation shall be in accordance with manufacturer's installation instructions and approved drawings, cuts, and details.

4. Anchorage. Anchorage shall be provided where necessary for fastening miscellaneous metal items securely in place. Anchorage not otherwise specified or indicated shall include slotted inserts made to engage with the anchors, expansion shields, and power-driven fasteners when approved for concrete; toggle bolts and

through bolts for masonry; machine and carriage bolts for steel; and lag bolts and screws for wood.

5. Welding. This section specifies the welding procedures for miscellaneous structural steel using pre-qualified welds. The requirements of this section do not replace the welding requirements prescribed in other sections of the specification and on contract drawings. Welding of steel shall conform to the provisions of AWS D1.1, Sections 1 through 8, 10 and 11 unless otherwise specified. Welders and welding operators for steel shall pass the qualifications tests prescribed by AWS D1.1, Section 5. The welders and welding operators so qualified shall be certified by name. The date qualified and the code under which qualified shall be on the certificate. Prior qualification will be acceptable only when the Contractor certifies that the welder has performed satisfactory work using the process in all positions for which qualified within the preceding three months. The Contractor shall require welders and welding operators to repeat the qualifying tests when in the opinion of the Contracting Officer their work indicates a reasonable doubt of proficiency. Those passing the requalifying tests shall be recertified. Those not passing shall be disqualified until passing. All expenses in connection with qualification and requalification shall be borne by the Contractor.

D. MATERIALS:

1. Structural Steel. Carbon grade steel shall conform to ASTM A 36.

2. Carbon Steel Bolts. Carbon steel bolts shall conform to ASTM A 307, Grade A with carbon steel nuts conforming to ASTM A 563, Grade A.

3. Nuts Dimensional Style. Carbon steel nuts shall be Heavy Hex Style when used with ASTM A 307 bolts.

4. Washers. Plain washers shall conform to ASTM F 844. Other types, when required, shall conform to ASME B18.21.1.

5. Expansion Anchors. Anchor bolts shall be externally threaded wedge expansion bolt anchors, stainless steel, Hilti Kwik Bolt II or approved equal. Anchor bolt studs shall be stainless steel and conform to ASTM A 276 with chemical composition of either Type 304 or 316 stainless steel. Anchor bolt wedge shall be manufactured from either Type 304 or 316 stainless steel to conform with stud material. Nut shall be stainless steel conforming to ASTM F 594 with chemical composition of either Type 304 or 316 stainless steel and meeting dimensional requirements of ASME

B18.2.2 to conform with stud material. Washer shall be Type 304 or 316 stainless steel conforming to ASTM A 240 to conform with stud material.

6. Shop Painting. Surfaces of ferrous metal except galvanized surfaces, shall be cleaned and shop coated with the manufacturer's standard protective coating unless otherwise specified. Surfaces of items to be embedded in concrete shall not be painted. Items to be finish painted shall be prepared according to manufacturer's recommendations or as specified.

7. Manhole Cast Iron Frames and Covers. Cast Iron Frames and Covers shall meet the requirements of ASTM A 47 and ASTM A 48.

8. Pumpwell Pit and Channel Grate and Frame. Pumpwell pit and channel grate and grate frame shall be castings conforming to ASTM A 48, Class 35B, Gray Iron, NEENAH R-4999-HX with cover grate type A or an approved equal. The grate shall be bolted to the frame. The frame shall be securely attached to the concrete.

9. Grating and Frame above Intake Gate. Steel grating shall be designed in accordance with NAAMM-01 for bar type floor gratings to support minimum concentrated load of 5000 pounds at grate mid span. Edges shall be banded with bars 1/4 inch less in height than bearing bars for grating sizes above 3/4 inch. Banding bars shall be flush with the top of bearing grating. Frames shall be of welded steel construction finished to match the grating. Floor grating and frame shall be galvanized after fabrication. Grating shall be securely fastened using anchorage devices to grating frame. The frame shall be securely attached to the concrete.

10. Miscellaneous. Miscellaneous plates and shapes for items that do not form a part of the structural steel framework, such as lintels, sill angles, miscellaneous mountings, and frames, shall be provided to complete the work.

E. EXECUTION:

1. General. All items shall be installed at the locations shown and according to the manufacturer's recommendations. Products shall be stored in protected areas free from corrosive and damaging conditions (i.e. atmosphere, weather, humidity, construction traffic, etc.) until ready for installation. All items to be installed shall be thoroughly cleaned. Packing compounds, rust, dirt, grit, and other foreign matter shall be removed. Items listed below require additional procedures as specified.

2. Trashracks for Intake. The trashracks shall be as shown on the contract drawings and shall be furnished and installed complete with all fittings, fasteners, anchors, and other appurtenances as shown and as required for proper installation. The Contractor shall become familiar with details of the work, verify dimensions in the field, and advise the contracting officer of any discrepancy before performing any work.

(a) Materials. The structural steel members used to construct the trashracks shall be as specified in section C.1. The anchor bolts used to fasten the trashrack to the channel paving and the head wall of the intake structure shall be as specified in section C.5. Welding filler material shall be as specified on the contract drawings or in accordance with AWS D1.1.

(b) Fabrication. The intake structure trashracks shall be fabricated of welding quality structural shapes and plates in accordance with the details shown in the contract drawings. Suitable welding jigs shall be used in fabrication to rigidly hold the various members in proper relationship with each other until sufficient welding has been done to assure that, when completed, the trashracks will meet the dimensional requirements shown on the drawings. Materials shall be welded in accordance with qualified procedures using performance-qualified welders and welding operators. Procedures and welders shall be qualified welders and welding operators. Procedures and welders shall be qualified in accordance with AWS D1.1. Structural members shall be welded in accordance with AWS D1.1. Trashrack shall be hot-dip galvanized after fabrication.

(c) Installation. The trashrack shall be installed as specified and shown on the drawings. The trashrack structure shall be rigidly secured to concrete with expansion anchors. Care shall be taken during installation to prevent damage to the concrete surfaces, etc.

3. Manhole Frames and Covers for Intake Drainage Structure. The frames and covers shall be as indicated in the drawings and shall be furnished and installed with all flanges, fittings, fasteners, etc. and other appurtenances as shown and as required for proper installation. The Contractor shall become familiar with details of the work, verify dimensions in the field, and advise the contracting officer of any discrepancy before performing any work.

(a) Materials. The frame and cover shall meet the specifications for grey

iron castings, ASTM A 48, class 35B as a minimum requirement. The cover shall be a bolt down cover with a minimum of four stainless steel bolts. Bolts shall be a high strength or intermediate strength with material conforming to ASTM A 193.

(b) Fabrication. Manhole frame and cover castings for the intake shall be for heavy-duty loading. Manhole frames and covers shall be uniform quality, free from blowholes, shrinkage, distortion or other defects and they shall be smooth and well cleaned by shotblasting. The castings shall be manufactured true to pattern; component parts shall fit together in a satisfactory manner. Round frames and covers shall have continuously machined bearing surfaces to prevent rocking and rattling. Cast dimensions may vary one-half the maximum shrinkage possessed by the metal or +/- 1/16 inch per foot.

(c) Installation. The manhole frame and cover shall be installed as specified and shown on the drawings. The manhole frame and cover shall be rigidly secured to the concrete. Care shall be taken during installation to prevent damage to the concrete surfaces etc.

F. PAYMENT:

No additional payment shall be made for Miscellaneous Metals. Payment for this work shall be considered incidental to contract bid item "Intake and Drain" as listed in the itemized proposal.

SECTION 05540

STEEL H-PILES

PART 1 - GENERAL

1.1 DESCRIPTION

This section includes furnishing and installing steel HP 12 X 53 piles at the locations and as indicated on the drawings. The requirements herein are minimum. Strict compliance with these minimum requirements will not relieve the Contractor of the responsibility for adopting whatever additional provisions may be necessary to insure the successful completion of the work.

1.2 APPLICABLE PUBLICATIONS

The following publications of the issues listed below, but referred to thereafter by basic designation only, form a part of this specification to the extent indicated by the reference thereto:

American Society for Testing and Materials (ASTM) Publications:

A572-99	High-Strength Low-Alloy Structural Steel

American Welding Society (AWS) Publication:

ANSI/AWS D1.1-92	Structural Welding Steel

1.3 SUBMITTALS

Government approval is required for submittals with a "GA" designation; submittals having a "FIO" designation are for information only. The following shall be submitted in accordance with SECTION 01300.

SD-01 Data

Equipment, par. 2.3; GA-EC

Descriptions of all pile driving equipment to be employed in the work, shall be submitted to the Contracting Officer for approval prior to commencement of pile installation. This shall include details of pile hammer, power plant, leads, cushion material, and helmet.

SD-04 Drawings

Fabricated Additions; GA-EC

Detail drawings of required fabricated additions to plain pile, prior to commencing work or ordering materials.

SD-13 Certificates

Materials, par.2.2; GA-RE

Certified copies of mill test reports for structural steel shall be submitted prior to the commencement of pile installations.

Pile Capacity, par. 3.2.12; GA-EC

SD-18 Records

Pile Driving; FIO-RE

A complete and accurate record of each driven pile, within 3 days of completion of driving. The record shall indicate the pile location (as driven), size, driven length, embedded length, final elevations of tip and top, pile weight, number of splices and locations, blows required for each foot of penetration throughout the entire length of the pile and the total driving time. The record shall also include the type and size of the hammer used, the rate of operation, and the type and dimensions of driving helmet and cushion block used. Any unusual conditions encountered during pile installation shall be recorded and immediately reported to the Contracting Officer.

1.4 EXPERIENCE

The work shall be performed by a Contractor or a specialty subcontractor specialized in the specified foundation system and having experience installing the specified foundation system under similar subsurface conditions.

1.5 QUALITY ASSURANCE

Fabricator Qualifications: Fabricator shall have a minimum of five (5) years of successful experience in the fabrication of all sizes of steel H-piles.

1.6 DELIVERY, STORAGE AND HANDLING

Piles shall be delivered to the Project site in such quantities and at such times to ensure continuity of pile driving and testing operations and adherence to Project schedule.

1.7 SUBSURFACE DATA

Subsurface soil data logs are shown on the drawings. The subsurface investigation report is available upon request by contacting the Kansas City District Corps of Engineers, ATTN:CEMRK-EC-GD.

PART 2 - PRODUCTS

2.1 MATERIAL

2.1.1 Steel

Hot-rolled, carbon steel structural shapes and plates, conforming to the requirements of ASTM A572, Grade 50. HP 12 X 53 Piles shall be ordered to the length shown on the drawings.

2.1.2 Welding

Welders, welding processes, and procedures shall be qualified in accordance with the American Welding Society (AWS) D1.1-92 "Structural Welding Code - Steel."

2.1.3 Non-shrink Grout

Non-shrink grout for H-piles in pre-drilled holes shall be in accordance with requirements of Section: CAST-IN-PLACE STRUCTURAL CONCRETE FOR CIVIL WORKS.

2.1.4 Flowable Backfill

Flowable Backfill for H-piles in pre-drilled holes shall be in accordance with requirements of Section: CAST-IN-PLACE STRUCTURAL CONCRETE FOR CIVIL WORKS

2.2 CERTIFICATION
(SD13-GA)

Submit steel producer's certificates of mill analysis, test reports and mill test results, and submit certification that all materials used for fabrication of steel pipe piles meet the requirements of the specifications.

2.3 PILE DRIVING EQUIPMENT
(SD01-GA)

2.3.1 Hammer

Pile driving hammers of sufficient capacity, size, and type to be able to deliver consistently effective dynamic energy, suitable to piles to be driven and to subsurface material into which they are to be driven, when operating at not more than 80 percent efficiency of rated driving energy. Minimum rated hammer energy shall be 19,500 foot-pounds with a minimum ram weight of 5,000 pounds.

2.3.2 Driving Helmets and Pile Cushions

A driving helmet or cap including a pile cushion shall be used between the top of the pile and the ram to prevent impact damage to the pile. The driving helmet or cap and pile cushion combination shall be capable of protecting the head of the pile, minimizing energy absorption dissipation, and transmitting hammer energy uniformly over the top of the pile. The driving helmet or cap shall fit loosely around the top of the pile so that the pile is not restrained by the driving cap if the pile tends to rotate during driving. A new pile cushion shall be used at the start of driving for each pile and the cushion shall be replaced whenever it has become highly compressed, charred, burned, or deteriorated in any manner during driving. The pile cushion may be make of solid wood or laminated construction using plywood, softwood, or hardwood boards or other cushion material as approved by the Contracting Officer. The pile cushion shall completely cover the top surface of the pile and shall be retained by the driving helmet. The minimum thickness of the pile cushion shall be 3 inches.

PART 3 - EXECUTION

3.1 PRELIMINARY WORK

3.1.1 Pile Tip Reinforcement

Pile tip reinforcements shall be used to protect the pile tips during driving.

3.1.2 Pile Length Markings

The Contractor shall mark each pile length with horizontal line at 1-foot intervals, and the number of feet from pile tip at 5-foot intervals.

3.2 INSTALLATION

3.2.1 South Abutment

Excavation shall be stopped 1 foot above foundation grade before piles are driven. When pile driving is completed, excavation shall be completed to the lines and grades shown. Piles shall be driven as accurately and carefully as practicable, true to line both laterally and longitudinally, and to or below the "calculated" tip elevation as shown on the drawings but until refusal is reached. Refusal is defined as 100 blows per inch. Continuously drive piles at locations indicated on the drawings. Leads and pile shall be plumb before driving. Care shall be taken during driving to prevent, and to correct, any tendency of piles to twist or rotate. Diesel-powered hammers shall be operated at the rate recommend by the manufacturer throughout the entire drive period. Sufficient pressure shall be maintained at the steam hammer so that there is full upward stroke for a single-acting hammer. A new pile cushion shall be used at the start of driving for each pile and the cushion shall be replaced whenever it has become highly compressed, charred, burned, or deteriorated in any manner during driving. Each pile shall be driven continuously and without interruption until the required depth of penetration and penetration rate per blow have been attained. If a pile fails to reach the "calculated" tip elevation without reaching the required refusal or reaching a tip depth of at least 20 feet, the Contractor shall notify the Contracting Officer and perform corrective measures as directed by him.

3.2.2 North Abutment

3.2.2.1 Pre-drilled Installation

Pre-drilling is necessary for the installation of piles at the north abutment. Drilling, including augering and coring, shall be advanced to the elevation shown on the drawings. Upon reaching the elevation shown on the drawings, the Contracting Officer shall verify the foundation in the bottom of the hole is suitable prior to placement of the pile in to the hole. The pre-drilled boring diameter shall be 18-inches or as approved in writing by the Contracting Officer. Temporary steel casing placed through the abutment fill material is allowable. If temporary steel casing is used, it shall be used in accordance with Section: DRILLED FOUNDATION CAISSONS (PIERS). Pre-drilled holes shall be advanced and maintained vertical and plumb.

3.2.2.2 Steel H-Pile Placement in Pre-drilled Hole

Piles shall be lowered to the bottom of the hole in a controlled manner. Dropping piles into the hole is prohibited. Piles shall be placed using adequate centalizers to maintain the pile centered in the hole vertical and plumb until the grout has reached an initial set.

3.2.2.3 Grout Backfill

After placement of the pile in the pre-drilled hole, backfill the annulus of the hole with non-shrink grout by tremie method or pump placement from the bottom of the hole to the elevation shown on the drawings. The discharge shall be kept a minimum of 3 feet below the fresh non-shrink grout surface during placement. After a minimum of 24 hours after the non-shrink grout was mixed, backfill from the top of the non-shrink grout to the elevation of the bottom of the pile cap by tremie method or pump placement with flowable backfill as shown on the drawings. The discharge shall be kept a minimum of 3 feet below the fresh flowable backfill surface during placement.

3.2.3 Jetting of Piles

Jetting of piles will not be permitted.

3.2.4 Splices

Field splices should be avoided for lengths under 60 feet. If it is determined during driving operations that a pile length will not be sufficient to attain final driving resistance and/or to meet final cut-off elevation, the steel H-pile shall be spliced by welding, as shown on the plans. Clean surfaces to be welded of rust, scale, oil, paint, and foreign material. Use only pile members with identical cross-sections for splicing. Splices shall be 100 percent full penetration groove weld, producing straight pile alignment through splice and developing full strength of pile in both bearing and bending.

3.2.5 Driving Tolerances

Piles shall be driven within the following maximum tolerances:

3.2.5.1 Location: 2 inches from location indicated for center of gravity of each single pile or pile groups.

3.2.5.2 Plumbness: A variation in batter, as measured on the driven pile, of not more than 1/8 inch per foot of longitudinal axis will be permitted.

3.2.5.3 Unless stated otherwise, top of pile elevation shall not vary by more than 3 inches above or below the correct cut-off elevation.

3.2.6 Damaged or Misdriven Piles

Damaged piles and piles driven outside required driving tolerances will not be accepted. Manipulation of the pile to force them into proper position, considered by the Contracting Officer to be excessive, will not be permitted. Any pile damaged by improver driving or driven out of its proper location shall be remedied, as approved by the Contracting Officer, at the Contractor's expense. Piles rejected after driving shall be abandoned and replaced with new piles at a location directed by the Contracting Officer. Abandoned piles shall be cut-off or retrieved. Rejection and replacement of the pile shall be at no additional cost to the Government.

3.2.7 Steel Build Up

In the event that the top of any steel pile is below the specified pile cut-off elevation after the pile has reached the specified resistance, the pile shall be

built up to the required cut-off elevation with a welded splice as specified herein.

3.2.8 Cutting-Off

Where piles are required to be cut off, torch cutting, or any other method approved by the Contracting Officer may be used. All costs associated with this item shall be considered incidental to the cost of Drive Piles.

3.2.9 Welding

Shop and field welding, qualification of welding procedures, welders, and welder operators shall be in accordance with AWS D1.1.

3.2.10 Disposal of Excess Pile Material

Rejected and withdrawn piles and excess pile material resulting from cutoffs or other reasons, shall be removed by the Contractor from the project site and disposed of properly.

3.3. Payment for this work item is included in the bid item : New Prospect Bridge.

* * * * * *

DIVISION 6 - WOOD AND PLASTICS

(NOT USED)

DIVISION 7 - THERMAL & MOISTURE PROTECTION

Section No.	Title
07900	Joint Sealants

07900 JOINT SEALANTS

A. GENERAL:

1. Description: The Contractor shall furnish and install all joint sealants and caulking as specified herein and as shown on the drawings.

2. References: The following publications form a part of these specifications to the extent indicated by references thereto. Only the most recent revisions of these publications shall be used.

Federal Specifications:

(a) TT-S-00227E Sealing Compound: Elastomeric Type, MultiComponent (For Caulking, Sealing and Glazing in Buildings and Other Structures)

(b) TT-S-00230E Sealing Compound: Elastomeric Type, SingleComponent (For Caulking, Sealing and Glazing in Buildings and Other Structures)

American Society for Testing and Materials (ASTM)

(a) C 920 Specification for Elastomeric Joint Sealants

3. Scope of Work: Joints to be caulked include the following:

(a) Vertical expansion and control joints. Use sealant type 2 colored to match the adjacent panels.

(b) Horizontal joints. Use sealant type 1.

4. Submittals: The Contractor shall submit for approval the following items

required by this Division:

(a) Manufacturer's data on sealant, SD01-GA-RE.
(b) Color samples, SD14-GA-RE.

B. MATERIALS:

1. Sealants:

(a) Sealant type 1 shall be a urethane sealant meeting federal specification TT-S-00227E and ASTM C920.

(b) Sealant type 2 shall be a self leveling polyurethane sealant meeting federal specification TT-S-00227E.

2. Miscellaneous Materials:

(a) Joint cleaner shall be as recommended by the sealant manufacturer for the joint surfaces to be cleaned.

(b) Joint primer/sealer shall be as recommended by the sealant manufacturer for the joint surfaces to be primed or sealed.

(c) Bond breaker shall be polyethylene tape or other plastic tape as recommended by the sealant manufacturer.

(d) Backer rod shall be closed cell polyethylene foam.

C. EXECUTION:

1. Preparation

(a) Clean joint surfaces immediately before application of sealant or caulking compound.

(b) Remove dirt, oil, grease, insecure coatings, moisture, corrosion, loose aggregate and other substances which would interfere with bonding.

(c) Sealants shall not be applied to concrete or masonry joints where a water repellent or masonry preservative has been applied prior to caulking. Waterproofing treatments should be applied after caulking, when called for.

(d) Do not proceed with the installation of sealants under adverse weather conditions when joint to be sealed is damp, wet or frozen, or when temperatures are below or above the manufacturer's recommended limitations for installation. Consult the manufacturer for specific instructions before proceeding.

2. Application

(a) Conform to manufacturer's printed instructions.

(b) Joint Primer shall be used when recommended by the sealant manufacturer.

(c) After joints have been completely filled they shall be neatly tooled to eliminate air pockets Or voids and to provide a smooth neat appearing finish. After tooling, the surface of sealant shall be free of ridges, wrinkles, sags, air pockets and embedded impurities.

(d) Immediately clean adjacent materials which have been soiled; leave work in a neat, clean condition.

D. PAYMENT: No additional payment shall be made for Joint Sealants. It shall be considered incidental to other contract bid items.

DIVISION 8 - DOORS & WINDOWS

(NOT USED)

DIVISION 9 - FINISHES

Section No.	Title
09901	Painting

SECTION 09901

PAINTING

PART 1 GENERAL

1.1 REFERENCES

The publications listed below form a part of this specification to the extent referenced. The publications are referred to in the text by basic designation only.

MILITARY SPECIFICATIONS

MIL-P-21035	(1991) Paint, High Zinc Dust Content, Galvanizing Repair

STEEL STRUCTURES PAINTING COUNCIL

SSPC-22	(1991) Paint Specification No. 22 Epoxy-Polyamide Paints (Primer, Intermediate, and Topcoat)
SSPC-PS Guide 17	(1991) Painting System Guide No. 17, "Guide for Selecting
SSPC-PA Guide 3	(1991) Paint Application Guide No. 3, "Guide to Safety in Paint Application"
SSPC-SP1	(1982) Surface Preparation Specification No. 1, Solvent Cleaning
SSPC-PA2	(1991) Paint Application Specification No. 2. Measurement of Dry Paint Thickness with Magnetic Gages

1.2 DESCRIPTION

This specification applies only to Prospect Bridge. This work shall consist of the painting of surfaces shown on the plans or otherwise specified to be painted. The work includes, but is not limited to, the preparation of surfaces to be painted, application and curing of the paint, protection of the work, protection of existing facilities, vehicles and the public from damage due to this work, and the furnishing of all labor, equipment and materials needed to perform the work.

1.3 SUBMITTALS

Government approval is required for submittals with a "GA" designation; submittals having an "FIO" designation are for information only. The

following shall be submitted in accordance with Section 01300 SUBMITTAL DESCRIPTIONS:

SD-01 Data

Paint; GA-RE.

The names, quantity represented, and intended use for the proprietary brands of materials proposed to be substituted for the specified materials when the required quantity of a particular batch is 50 gallons or less.

SD-06 Instructions

Mixing and Thinning; GA-RE.
Application; GA-RE.

Manufacturer's current printed product description, material safety data sheets (MSDS) and technical data sheets for each coating system. MSDS submittals shall meet the requirements of FED-STD 313. Detailed mixing, thinning and application instructions, minimum and maximum application temperature, and curing and drying times between coats for epoxy, moisture-curing polyurethane, and liquid glaze coatings. Detailed application instructions for textured coatings shall be provided.

SD-09 Reports

Paint; GA-RE.

A statement as to the quantity represented and the intended use, plus the following test report for batches in excess of 50 gallons:

a. A test report showing that the proposed batch to be used meets all specification requirements, or:

b. A test report showing that a previous batch of the same formulation as the batch to be used met all specification requirements, plus, on the proposed batch to be used, a report of test results for properties of weight per liter, (gallon,) viscosity, fineness of grind, drying time, color, and gloss.

SD-13 Certificates

Lead; FIO-RE.
Mildewcide and Insecticide; FIO-RE.
Volatile Organic Compound (VOC) Content; FIO-RE.

Certificate stating that paints for interior use contain no mercurial mildewcide or insecticide. Certificate stating that paints proposed for use contain not more than 0.06 percent lead. Certificate stating that paints proposed for use meet the VOC regulations of the local Air Pollution Control Districts having jurisdiction over the geographical area in which the project is located.

1.4 PROTECTION OF PUBLIC AND PROPERTY

1.4.1 Compliance

The Contractor shall comply with all applicable environmental protection and occupational safety and health standards, rules, regulations, and orders. Failure to comply with these standards, rules, regulations, and orders will be sufficient cause for suspension or disqualification.

1.4.2 Disposal

All reasonable precautions shall be taken to contain waste materials (used blasting material and old paint) classified as hazardous. Disposal of hazardous waste material shall be performed in accordance with all applicable Federal, state, and local laws.

1.4.3 Protective Devices

The Contractor shall provide protective devices such as tarps, screens or covers as necessary to prevent damage to the work and to other property or persons from all cleaning and painting operations.

1.4.4 Paint or Paint Stains

Paint or paint stains that result in an unsightly appearance on surfaces not designated to be painted shall be removed or obliterated by the Contractor at his or her expense. If traffic causes an objectionable amount of dust, the Contractor, when directed by the Contracting Officer, shall sprinkle the adjacent roadbed and shoulders with water or dust palliative for a sufficient distance on each side of the location where painting is being done. Upon completion of all painting operations and of any other work that would cause dust, grease, or other foreign materials to be deposited on the painted surfaces, the painted surfaces shall be thoroughly cleaned. At the time of opening structures to public traffic, the painting shall be completed, and the surfaces shall be undamaged and clean.

1.5 WEATHER CONDITIONS

Paint shall be applied only on thoroughly dry surfaces. Painting will not be permitted when the atmospheric temperature, paint, or the surface to be painted is at or below 40oF or above 100 degrees F, or when metal surfaces are less than 5 degrees F above the dew point, or when the humidity exceeds 85 percent at the site of the work, or when freshly painted surfaces may become damaged by rain, fog, or dust, or when it can be anticipated that the atmospheric temperature will drop below 40 degrees F during the drying period, except as provided herein for painting in enclosures. Metal surfaces which are hot enough to cause the paint to blister, to produce a porous paint film, or to cause the vehicle to separate from the pigment shall not be painted.

PART 2 PRODUCTS

2.1 COLOR

The color of the top or finish coat of paint shall be submitted to the Contracting Officer for approval.

2.2 PAINTING METAL STRUCTURES

2.3 Coating Systems and Paints

The coating system and paints to be applied shall consist of the system in Table 1 which is specified for use or modified by the special provisions.

TABLE 1

Primer	Organic Zinc-3 mils. (min.)
Intermediate Coat	Epoxy 2 mils (min.)
Top Coat	Epoxy 2 mils.(min.)
Total System	7 mils (min).

2.3.1 Organic Zinc Paint

Organic zinc paint shall meet the requirements of Military Specification MIL-P-21035.

2.3.4 Epoxy Paint

Epoxy paint shall meet the requirements of the Steel Structures Painting Council, SSPC-22.

2.4 Handling Practices

Paints are hazardous because of their flammability and potential toxicity. Safehandling practices are required and should include, but not be limited to, the provisions of SSPC-PA Guide 3, "A Guide to Safety in Paint Application."

PART 3 EXECUTION

3.1 PAINTING DURING INCLEMENT WEATHER

Subject to approval of the Contracting Officer, the Contractor may provide a suitable enclosure to permit painting during inclement weather. Provisions shall be made to artificially control atmospheric conditions inside the enclosure within limits suitable for painting throughout the painting operation. Surfaces painted under cover in damp or cold weather shall remain under cover until the paint dries or weather conditions permit open exposure. Full compensation for providing and maintaining such enclosures shall be considered as included in the prices paid for the various contract items of work involving painting and no additional compensation will be allowed therefore.

3.2 PAINTING DURING DAYLIGHT HOURS

All blast cleaning, except that performed within closed buildings, and all painting shall be performed during daylight hours unless otherwise provided by the contract documents.

3.3 PROTECTION OF THE WORK

All painted surfaces that are marred or damaged as a result of operations of the Contractor shall be repaired by the Contractor, at his or her expense, with materials and to a condition equal to that of the coating specified herein.

3.4 SURFACE PREPARATION

All exposed surfaces of structural steel, except galvanized or metalized surfaces, shall be cleaned and painted.

3.4.1 Surfaces of New Structural Steel

All surfaces of new structural steel shall be cleaned by the blast-cleaning method unless otherwise specified in the special provisions, or approved in writing by the Contracting Officer.

3.4.2 Repainting Existing Steel Structures

In repainting existing steel structures the method of cleaning shall be as specified in the special provisions. Any damage to sound paint, on areas not designated for treatment, resulting from the Contractor's operations shall be repaired by the contractor at his or her expense to the satisfaction of the Contracting Officer.

3.5 CLEANING OF METAL SURFACES

The methods used in the cleaning of metal surfaces shall conform to the following.

3.5.1 Blast Cleaning

Abrasives used for blast cleaning shall be either clean dry sand, mineral grit, steel shot, or steel grit, at the option of the Contractor, and shall have a suitable grading to produce satisfactory results. The use of other abrasives will not be permitted unless approved in writing by the Contracting Officer.

3.5.1.1 Unwashed Beach Sand

Unwashed beach sand containing salt or excessive amounts of silt will not be allowed.

3.5.1.2 Foreign Material

All dirt, mill scale, rust, paint, and other foreign material shall be removed from exposed steel surfaces in accordance with the requirements of SP-10 and SSPC-SP1. Blast cleaning shall leave all surfaces with a dense and uniform anchor pattern of not less than one nor more than three mils. as measured with an approved surface profile comparator.

3.5.1.3 Blast Cleaning Near Machinery

When blast cleaning is being performed near machinery, all journals, bearings, motors, and moving parts shall be sealed against entry of

abrasive dust before blast cleaning begins.

3.5.1.4 Blast Cleaned Surfaces

Blast cleaned surfaces shall be primed or treated the same day blast cleaning is done, unless otherwise authorized by the Contracting Officer. If cleaned surfaces rust or are contaminated with foreign material before painting is accomplished, they shall be reblast cleaned by the Contractor at his or her expense.

3.6 STEAM CLEANING

All dirt, grease, loose chalky paint, or other foreign material which has accumulated on the previously painted or galvanized surfaces shall be removed with a steam cleaning apparatus which shall precede all other phases of cleaning. It is not intended that sound paint be removed by this process. Any paint which becomes loose, curled, lifted, or loses its bond with the preceding coat or coats after steam cleaning shall be removed as directed by the Contracting Officer to sound paint or metal surface by the Contractor at his or her expense.

3.6.1 Biodegradable Detergent

A biodegradable detergent shall be added to the feed water of the steam generator or applied to the surface to be cleaned. The detergent shall be of such composition and shall be added or applied in such quantity that the cleaning as described in the above paragraph is accomplished.

3.6.2 Residue

Any residue, detergent, or other foreign material which may accumulate on cleaned surfaces shall be removed by flushing with fresh water.

3.6.3 Cleaning

Steam cleaning shall not be performed more than two weeks prior to painting or other phases of cleaning. Subsequent painting shall not be performed until the cleaned surfaces are thoroughly dry and in no case in less than 24 hours after cleaning, and flushing.

3.7 SOLVENT CLEANING

Unless otherwise prohibited by the special provisions, solvents shall be used to remove oil, grease, and other soluble contaminants in accordance with the requirements of SSPC-SPI, Solvent Cleaning. Solvent cleaning shall be performed prior to blast cleaning. If contamination remains after blasting, the area shall be recleaned with solvent.

3.8 HAND CLEANING

Wire brushes, either hand or powered, hand scraping tools, power grinders, or sandpaper shall be used to remove all dirt, loose rust and mill scale, or paint which is not firmly bonded to the metal surfaces.

3.8.1 Pneumatic Chipping Hammers

Pneumatic chipping hammers shall not be used unless authorized in writing

by the Contracting Officer.

3.9 APPLICATION OF PAINTS

3.9.1 Notification

The Contractor shall notify the Contracting Officer, in writing, at least one week in advance of the date that cleaning and painting operations are to begin.

3.9.2 Painting

Painting shall be done in a neat and workmanlike manner. Unless otherwise specified, paint shall be applied by brush, spray, or roller, or any combination thereof peculiar to the paint being applied.

3.9.3 Curing of Paint

Each application of paint shall be thoroughly cured and any skips, holidays, thin areas, or other deficiencies corrected before the succeeding application. The surface of the paint being covered shall be free from moisture, dust, grease, or any other deleterious materials that would prevent the bond of the succeeding applications.

3.9.4 Spot Painting

In spot painting, old paint which lifts after the first application shall be removed by scraping and the area repainted before the next application.

3.9.5 Thinning

Paints specified are formulated ready for application and no thinning will be allowed unless otherwise provided in the applicable materials specification for the paint being used.

3.9.6 Brushes

Brushes, when used, shall have sufficient body and length of bristle to spread the paint in a uniform film. Round, oval shaped brushes, or flat brushes not wider than 4-1/2 inches shall be used. Paint shall be evenly spread and thoroughly brushed out.

3.9.7 Inaccessible Surfaces

On all surfaces that are inaccessible for painting by regular means, the paint shall be applied by sheepskin daubers, bottle brushes, or by any other means approved by the Contracting Officer.

3.9.8 Rollers

Rollers, when used, shall be of a type that do not leave a stippled texture in the paint film. Rollers shall be used only on flat, even surfaces to produce a paint film of even thickness with no skips, runs, sags, or thin areas.

3.9.9 Spray Equipment

Paint may be applied with airless or conventional spray equipment.

3.9.9.1 Suitable Traps

Suitable traps or separators acceptable to the Contracting Officer shall be furnished and installed in the airline to each spray pot to exclude oil and water from the air.

3.9.9.2 Spray Method

Any spray method which produces excessive paint build-up, runs, sags, or thin areas in the paint film, or skips and holidays, will be considered unsatisfactory and the Contracting Officer may require modification of the spray method or prohibit its use and require brushing instead.

3.9.10 Mechanical Mixers

Mechanical mixers shall be used to mix paint. Prior to application, paint shall be mixed a sufficient length of time to thoroughly mix the pigment and vehicle together, and shall be kept thoroughly mixed during its application.

3.9.11 Dry Film Thickness

The dry film thickness of the paint will be measured in place with a calibrated magnetic film thickness gage according to Steel Structures Painting Council SSPC-PA2.

3.9.12 Thickness of Each Application

The thickness of each application shall be limited to that which will result in uniform drying throughout the paint film.

3.9.13 Succeeding Applications

Succeeding applications of paint shall be of such shade as to contrast with the paint being covered. Structures shall be blast cleaned and painted with the total thickness of undercoats before erection. After erection and before applying subsequent paint, all areas where paint has been damaged or has deteriorated and all exposed unpainted surfaces shall be thoroughly cleaned and spot painted with the specified undercoats to the specified thickness. Surfaces exposed to the atmosphere and which would be inaccessible for painting after erection shall be painted the full number of applications prior to erection. Vinyl wash primer, if required, shall not be applied more than 12 hours before application of the succeeding coat of paint. The vinyl wash primer shall be applied by spraying to produce a uniform wet film on the surface. The dry film thickness shall be between 0.3 and 0.5 mils. The painting of areas under joint connection and splice plates shall conform to SECTION 05100, paragraph titled SURFACE CONDITIONS.

3.9.13.1 Application of Zinc-Rich Primers

Zinc-rich primers, which include organic and inorganic zinc primers, shall be applied by spray methods. On areas inaccessible to spray application, the paint may be applied by brush or daubers. Mechanical

mixers shall be used in mixing the primer. After mixing, zinc-rich primers shall be strained through a metal 30-60 mesh screen or a double layer of cheesecloth immediately prior to or during pouring into the spray pot. An agitating spray pot shall be used in all spray application of zinc-rich primers. The agitator or stirring rod shall reach to within 2 inches of the bottom of the spray pot and shall be in motion at all times during primer application. Such motion shall be sufficient to keep the primer well mixed. Spray equipment shall provide the proper pot pressure and atomization pressure to produce a coating the composition of which shall comply in all respects to the specifications for zinc paint. The hose from pot to nozzle shall not be more than 75 feet long, nor be used more than 15 feet above or below the pot. Cured, zinc-rich primer shall be free from dust, dirt, salt. or other deleterious deposits and thoroughly dry before applying vinyl wash primer. In addition, the application of inorganic zinc paints shall conform to the following paragraphs. Succeeding applications of inorganic zinc paints shall be applied within 24 hours, but not less than 30 minutes after prior application of such paint. In areas where mud-cracking occurs in the inorganic zinc paint, it shall be blast cleaned back to soundly bonded paint, and recoated to the same thickness by the same methods specified for the original coat. Paint shall be cured for 48 hours at a relative humidity of at least 45 percent before the application of vinyl wash primer. The cured inorganic zinc paint shall be hosed down with water and be in a surface dry condition before the application of vinyl wash primer if the vinyl wash primer is not applied within three weeks after the inorganic zinc paint is applied, or when there is evidence of dust, dirt, salt, or other deleterious deposits on the inorganic zinc paint.

3.10 PAINTING GALVANIZED SURFACES

All galvanized surfaces that are to be painted shall first be cleaned by washing with mineral spirit solvent sufficient to remove any oil, grease, or other materials foreign to the galvanized coating. After cleaning, vinyl wash primer shall be applied to such surfaces. The vinyl wash primer shall be applied by spraying to produce a uniform wet film on the surface. The dry film thickness shall be between 0.3 and 0.5 mils. Finish paint to be applied to primed galvanized surfaces shall be as shown on the plans or otherwise specified. If not shown or otherwise specified, the finish paint shall be the same as that used on adjacent metal work or shall be as directed by the Contracting Officer. No separate payment will be made for preparing and painting galvanized surfaces and full compensation for furnishing all labor, materials, tools, equipment, and incidentals, and for doing all the work involved in preparing and painting galvanized surfaces as shown on the plans, and as specified in these specifications and the special provisions, and as directed by the Contracting Officer will be considered as included in the prices paid for the various contract items of work involving the galvanized surfaces.

3.11 PAYMENT: There shall be no separate payment for Painting, but shall be subsidiary to related contract bid items.

****

DIVISION 10 - SPECIALTIES

(NOT USED)

DIVISION 11 - EQUIPMENT

Section No.	Title
11310	Re-circulation Pump

11310 RECIRCULATION PUMP

A. General:

1. References. The publications listed below form a part of this specification to the extent referenced. The publications are referred to in the text by the basic designation only.

AMERICAN SOCIETY FOR TESTING AND MATERIALS (ASTM)

ASTM A 153 (1982; R 1987) Zinc Coating (Hot-Dip) on Iron and Steel Hardware

AMERICAN SOCIETY OF MECHANICAL ENGINEERS (ASME)

ASME B40.1 (1991) Gauges - Pressure Indicating Dial Type - Elastic Element

ANTI-FRICTION BEARING MANUFACTURERS ASSOCIATION (AFBMA)

AFBMA 9 (1990) Load Ratings and Fatigue Life for Ball Bearings

AFBMA 11 (1990) Load Ratings and Fatigue Life for Roller Bearings

NATIONAL ELECTRICAL MANUFACTURERS ASSOCIATION (NEMA)

NEMA ICS 1 (1988; Rev 1, 2 & 3) Industrial Controls and Systems

NEMA MG 1 (1987; Rev 1) Motors and Generators

NATIONAL FIRE PROTECTION ASSOCIATION (NFPA)

NFPA 70 (1993) National Electrical Code

B. Requirements.

1. Delivery and Storage. All equipment delivered and placed in storage shall be stored with protection from the weather, excessive humidity and excessive temperature variation; and dirt, dust, or other contaminants.

2. Field Measurements. The Contractor shall become familiar with all details of the work, verify all dimensions in the field, and shall advise the Engineer of any discrepancy before performing the work.

C. Submittals.

The following shall be submitted for Government review/approval:

1. Recirculation System, SD01GA-EC; SD06GA-EC; The following shall be submitted for Government approval:

Pump characteristic curves showing capacity in gpm, net positive suction head (NPSH), head, efficiency, and pumping horsepower from 0 gpm to 110 percent (100 percent for positive displacement pumps) of design capacity. A complete list of equipment and material, including manufacturer's descriptive data and technical literature, performance charts and curves, catalog cuts, and installation instructions.

2. Spare Parts, SD01-GA-RE; The following shall be submitted for Government review:

Spare parts data for each different item of material and equipment specified, after approval of the related submittals, and not later than one month prior to the projected date of acceptance. The data shall include a complete list of parts and

supplies, with current unit prices and source of supply.

3. Recirculation System, SD04-GA-EC; The following shall be submitted for Government approval:

Drawings containing complete wiring and schematic diagrams and any other details required to demonstrate that the system has been coordinated and will properly function as a unit. Drawings shall show proposed layout and anchorage of equipment and appurtenances, and equipment relationship to other parts of the work including clearances for maintenance and operation.

4. Recirculation System, SD06-FIO-EC; The following shall be submitted for Government review:

Diagrams, instructions, and other sheets proposed for posting.

5. Field Testing and Adjusting Equipment, SD06-GA-EC; The following shall be submitted for Government review:

Performance test reports in booklet form showing all field tests performed to adjust each component and all field tests performed to prove compliance with the specified performance criteria, upon completion and testing of the installed system. Each test report shall indicate the final position of controls.

6. Recirculation System; The following shall be submitted for Government approval:

Six copies of operation and six copies of maintenance manuals for the equipment furnished. One complete set prior to performance testing and the remainder upon acceptance. Operation manuals shall detail the step-by-step procedures required for system startup, operation, and shutdown. Operation manuals shall include the manufacturer's name, model number, parts list, and brief description of all equipment and their basic operating features. Maintenance manuals shall list routine maintenance procedures, possible breakdowns and repairs, and troubleshooting guides. Maintenance manuals shall include piping and equipment layout and

simplified wiring and control diagrams of the system as installed. Manuals shall be approved prior to the field training course.

D. MATERIAL AND EQUIPMENT REQUIREMENTS:

1. General. Materials and equipment shall be the standard products of a manufacturer regularly engaged in the manufacture of such products and shall essentially duplicate items that have been in satisfactory use for at least 2 years prior to bid opening. Equipment shall be supported by a service organization that is, in the opinion of the Engineer reasonably convenient to the site.

(a) Nameplates. Each major item of equipment shall have the manufacturer's name, address, type or style, model or serial number, and catalog number on a plate secured to the item of equipment.

(b) Equipment Guards. Belts, pulleys, chains, gears, projecting setscrews, keys, and other rotating parts so located that any person may come in close proximity thereto shall be enclosed or guarded.

(c) Special Tools. One set of special tools, calibration devices, and instruments required for operation, calibration, and maintenance of the equipment shall be provided.

(d) Electric Motors. Motors shall conform to NEMA MG 1.

(e) Motor Controls. Controls shall conform to NEMA ICS 1.

(f) Bolts, Nuts, Anchors, and Washers. Bolts, nuts, anchors, and washers shall be steel; galvanized in accordance with ASTM A 153.

(g) Pressure Gauges. Compound gauges shall be provided on the suction side of pumps and standard pressure gauges on the discharge side of pumps. Gauges shall comply with ASME B40.1. Gauge ranges shall be as appropriate for the particular

installation.

2. Submersible Centrifugal Pumps. Submersible centrifugal pumps shall be centrifugal type pumps designed to pump solids up to 6 inches in diameter and shall be capable of withstanding submergence as required for the particular installation.

(a) Pump Characteristics. Recirculation pump shall have the following operating characteristics:

(1) Pump Service: creek/river/lake/rain water and raw sewage.

(2) Design Operating Point: 5000 gpm flow, 48 feet head, 78 percent efficiency minimum.

(3) Maximum Head Requirements: 58 feet head, 3800 gpm, 75 percent efficiency.

(4) Impeller Type: balanced, enclosed, two-vane, non-clogging.

(5) Operating Speed: 1150 rpm.

(6) Depth of Submergence: as indicated on drawings.

(7) Motor Type: NEMA B with Class F insulation.
a) Electrical Characteristics: 75hp, 480 volts ac, 3 phase, 60 Hz.
b) Size: Within rated load driving pump at specified rpm.

(8) Pump Control: Mercury level and H-O-A switch.

(b) Pump Casing. The casing shall be of the end suction volute type having sufficient strength to withstand operating pressures 50 percent greater than the maximum operating pressures and all stress and strain involved in the type of service used. The volute shall have smooth passages which provide unobstructed flow

through the pump. The casing shall be of the centerline discharge type equipped with an automatic pipe coupling arrangement for ease of installation and piping alignment. The design shall be such that the pump will automatically connect to the discharge piping when lowered into position with the guide rails. The casing shall be accurately bored for register fits with the suction and casing covers.

(c) Mating Surfaces. Mating surfaces where watertight seal is required, including seal between discharge connection elbow and pump, shall be machined and fitted with nitrile rubber O-rings. Fitting shall be such that sealing is accomplished by metal-to-metal contact between mating surfaces, resulting in proper compression of the O-rings without the requirement of specific torque limits.

(d) Coatings. Exterior surfaces of the casing shall be protected by a sewage resistant epoxy coating. All exposed nuts and bolts shall be stainless steel.

(e) Impeller. The impeller shall be of the double shrouded non-clogging design to minimize clogging of solids, fibrous materials, heavy sludge, or other materials found in sewage. The impeller shall be statically, dynamically, and hydraulically balanced within the operating range and to the first critical speed at 150 percent of the maximum operating speed to a tolerance of 0.02 in-oz/lb of impeller weight. The impeller shall be securely attached to the shaft with a locking arrangement whereby the impeller cannot be loosened by torque from either forward or reverse direction. Straight end shafts for attachment of the impeller shall not be acceptable.

(f) Wearing Rings. Volute casing wearing rings shall be provided to minimize impeller wear and shall be renewable type. They shall be provided on the impeller and casing and shall have wearing surfaces normal to the axis of rotation. Material for wear rings shall be standard of pump manufacturer. The wear rings shall be ASTM B43, Alloy 230 brass and held in place by 300 series stainless steel fasteners. Wearing rings shall be designed for ease of maintenance and shall be adequately secured to prevent rotation.

(g) Pump Shaft. The pump shaft shall be made from a solid of ASTM A303

stainless steel and shall be of adequate size and strength to transmit the full driver horsepower with a liberal safety factor.

(h) Seals. A tandem mechanical shaft seal system running in an oil bath shall be provided. Seals shall be of carbon on the rotating faces and ceramic on the stationary faces. The lower seal shall be replaceable without disassembly of the seal chamber. Conventional mechanical seals which require a constant pressure differential to effect sealing will not be allowed.

(i) Bearings. Pump bearings shall be ball or roller type designed to handle all thrust loads in either direction. Pumps depending only on hydraulic balance end thrust will not be acceptable. Bearings shall have an AFBMA L-10 life of 50,000 hours minimum, as specified in AFBMA 9 or AFBMA 11. Bearings which require lubrication according to a prescribed schedule shall not be acceptable.

(j) Motor. The pump motor shall have Class F insulation, NEMA B design, in accordance with NEMA MG 1, and shall be watertight. The motor shall be either oil filled, air filled with a water jacket, or air filled with cooling fins which encircles the stator housing. The pump and motor shall be designed so that they may be operated partially dry or completely submerged. The pump shall not require cooling jackets or other means for cooling purposes. Pump shall be equipped with two heat sensors which shall mount directly to the stator and be sized to open at 120°-130°C and automatically reset at 30°-35° differential. The sensor shall be connected in series with the motor starter coil so that the starter is tripped if the heat sensor opens.

(k) Power Cable. The power cable shall comply with NFPA 70, Type SO, and shall be of standard construction for submersible pump applications. The power cable shall enter the pump through a heavy duty entry assembly provided with an internal grommet assembly to prevent leakage. The cable entry junction chamber and motor shall be separated by a stator lead sealing gland or terminal board which shall isolate the motor interior from foreign material gaining access through the pump top. Cable run from the pump to the controller shall be one continuous length

without splices.

(l) Installation Systems.

(a) Rail Mounted Systems. Rail mounted installation systems shall consist of guide rails, a sliding bracket, and a discharge connection elbow. Guide rails shall be of the size and type standard with the manufacturer and shall not support any portion of the weight of the pump. The sliding guide bracket shall be an integral part of the pump unit. The discharge connection elbow shall be permanently installed in the wet well along with the discharge piping. The pump shall be automatically connected to the discharge connection elbow when lowered into place and shall be easily removed for inspection and service without entering the pump well.

(b) Bolt Down Systems. The pump mount system shall include a base designed to support the weight of the pump. The base shall be capable of withstanding all stresses imposed upon it by vibration, shock, and direct and eccentric loads.

(c) Lifting Chain. Lifting chain to raise and lower the pump through the limits indicated shall be provided. The chain shall be galvanized and shall be capable of supporting the pump.

(d) Recirculation Pump Sequence of Operation: There shall be three water level and thereby three floats associated with the pump operation. The first water level shall be bottom of the channel level (referred to as the middle water level). The pump shall operate with the HOA switch in the auto position and the water is at the channel level to produce the desired water flow in the channel. The second water level shall be the high water level. This level is approximately 6”-8” above the bottom of the channel level (referred to as the highest water level). Upon reaching this level and on activation of the float switch the controls shall stop pump operation. The pump controls shall remain in the off position and would require a manual restart to operate. This high water level

represents a rain situation in which the water flow in the channel occurs as a result of rain and therefore pump operation is not required. The third and final water level is approximately 18" below the bottom of the channel level (referred to as the lowest water level). Upon reaching this level and on activation of the float switch the controls shall stop pump operation to prevent cavitation. The pump shall resume operation when the desired water level is reached. Refer to paragraph 3 (a1) for mercury float switches to be used in this sequence of operation.

(e) In other words to clarify the above control requirements, three mercury switches will **automatically** start and stop (cycle)the pump except for the high water level switch which would require a manual reset to start the operation. With HOA switch in auto mode (cycling mode). Water level below the lowest level mercury switch will stop the pump to prevent cavitation. Water level above the highest level mercury switch, will stop the pump and the pump will remain in stopped position (will not cycle) and would require a **manual restart/reset.** If the highest level is not reached the pump will cycle between the set points of the mercury switches when on auto mode.

3. Electrical Work. Electrical motor driven equipment specified shall be provided complete with motors, motor starters, and controls. Electric equipment and wiring shall be in accordance with the electrical specifications. Electrical characteristics shall be as specified or indicated. Motor starters shall be provided complete with thermal overload protection and other appurtenances necessary for the motor control specified. Manual or automatic control and protective or signal devices required for the operation specified, and any control wiring required for controls and devices but not shown, shall be provided.

(a) Controls. Contractor shall provide all labor, materials, equipment, etc. required for a simplex motor control panel and float switches as specified. The motor control panel shall be shop assembled and tested meeting UL Standard 508 for industrial controls. The motor and control panel shall be provided by the pump manufacturer to insure single source responsibility for the equipment and to provide a cohesive installation.

(1) Mercury Float Switches: controls shall be provided for pump unit operation. Sealed steel tube mercury float switches shall be provided for turn off level and turn on control. The switches shall be protected by a solid polyurethane float that is leakproof, shockproof and corrosion resistant to sewage. All support brackets, electrical contacts, etc. shall be provided for a complete, reliable and permanent installation. Refer to paragraph 2 (d) above for pump sequence of operation.

(2) Control Panel: The controls shall be contained in an painted stainless steel lockable enclosure complying with NEMA 6P requirements and a hinged door with neoprene gasketing. Padlocking of the enclosure shall be provided along with nameplate information regarding the pump and electrical installation. Appropriate saftey signs shall also be included warning of electrical hazards. A red amber run light and H-O-A switch shall be provided. Incoming power shall be 480 volt, 3 phase, 60 Hz and shall be sized appropriately for the pump installed. Control voltage shall be 120 volt by means of an internal transformer. All terminal blocks for float switches, controls, lights, magnetic motor starter with overload relays, breakers, etc. shall be provided for a complete, reliable and permanent installation. An elapsed time meter, cycle counter and a 24-hour time clock (adjustable to 15 minute intervals to control pump operations) shall also be provided. The elapsed time meter shall be such that it will protect the motor from cycling which would cause damage.

E. EQUIPMENT INSTALLATION:

1. Pump Installation. Pumping equipment and appurtenances shall be installed in the position indicated and in accordance with the manufacturer's written instructions. All appurtenances required for a complete and operating pumping system shall be provided, including such items as piping, conduit, valves, wall sleeves, wall pipes, concrete foundations, anchors, grouting, pumps, drivers, power supply, seal water units, and

controls.

2. Painting. Pumps and motors shall be thoroughly cleaned, primed, and given two finish coats of paint at the factory in accordance with the recommendations of the manufacturer. Field painting required for ferrous surfaces not finished at the factory.

3. Impeller Trimming. After the pump is installed and the system is operating, the actual system head shall be determined by reading the 0-30 PSI pressure gage on the discharge side of the pump. The impeller shall then be removed and trimmed to match the operating head and flow rate. The impeller shall finally be re-installed and tested.

Note: The cost of trimming the impeller shall be part of this contract.

4. Field Testing and Adjusting Equipment.

(a) Operational Test. Prior to acceptance, an operational test of all pumps, drivers, and control systems shall be performed to determine if the installed equipment meets the purpose and intent of the specifications. Tests shall demonstrate that the equipment is not electrically, mechanically, structurally, or otherwise defective; is in safe and satisfactory operating condition; and conforms with the specified operating characteristics. Prior to applying electrical power to any motor driven equipment, the drive train shall be rotated by hand to demonstrate free operation of all mechanical parts. Tests shall include checks for excessive vibration, leaks in all piping and seals, correct operation of control systems and equipment, proper alignment, excessive noise levels, and power consumption.

(b) Retesting. If any deficiencies are revealed during any test, such deficiencies shall be corrected and the tests shall be reconducted.

5. Manufacturer's Services. Services of a manufacturer's representative who is experienced in the installation, adjustment, and operation of the equipment specified shall be provided. The representative shall supervise the installation, adjustment, and testing of the equipment.

(a) Warranty. The pump unit or any part thereof shall be warranted against defects in material and workmanship for a period of one (1) year from the date of installation. Delivery to the job site does not constitute installation. Installation shall be from that time the pump unit has been installed and deemed operational and accepted for use. The contractor shall be responsible for repair/replacement, removal and reinstallation of the pump unit and its components at no cost to the Government.

6. Posting Framed Instructions. Framed instructions containing wiring and control diagrams under glass or in laminated plastic shall be posted where directed. Condensed operating instructions, prepared in typed form, shall be framed as specified above and posted beside the diagrams. The framed instructions shall be posted before acceptance testing of the system.

7. Field Training. A field training course shall be provided for designated operating and maintenance staff members. Training shall be provided for a total period of 4 hours of normal working time and shall start after the system is functionally complete but prior to final acceptance tests. Field training shall cover all of the items contained in the operating and maintenance manuals.

F. PAYMENT: Payment for this work shall be made at the contract price bid per lump sum of "Pump Well - Mechanical" as listed in the itemized proposal.

DIVISION 12 - FURNISHINGS

(NOT USED)

DIVISION 13 - SPECIAL CONSTRUCTION

Section No.	Title
13110A	Cathodic Protection System (Sacrificial Anode)

SECTION 13110A

CATHODIC PROTECTION SYSTEM (SACRIFICIAL ANODE)
11/98

PART 1 GENERAL

1.1 REFERENCES

The publications listed below form a part of this specification to the extent referenced. The publications are referred to in the text by basic designation only.

AMERICAN SOCIETY FOR TESTING AND MATERIALS (ASTM)

ASTM B 418	(1995a) Cast and Wrought Galvanic Zinc Anodes
ASTM B 843	(1993; R 1998) Magnesium Alloy Anodes for Cathodic Protection
ASTM D 1248	(1998) Polyethylene Plastics Molding and Extrusion Materials

NACE INTERNATIONAL (NACE)

NACE RP0169	(1996) Control of External Corrosion on Underground or Submerged Metallic Piping Systems
NACE RP0177	(1995) Mitigation of Alternating Current and Lightning Effects on Metallic Structures and Corrosion Control Systems
NACE RP0188	(1999) Discontinuity (Holiday) Testing of Protective Coatings
NACE RP0190	(1995) External Protective Coatings for Joints, Fittings, and Valves on Metallic Underground or Submerged Pipelines and Piping Systems

NATIONAL ELECTRICAL MANUFACTURERS ASSOCIATION (NEMA)

NEMA TC 2	(1998) Electrical Polyvinyl Chloride (PVC) Tubing (EPT) and Conduit (EPC-40 and EPC-80)
NEMA WC 5	(1992; Rev 2, 1996) Thermoplastic-Insulated Wire and Cable for the Transmission and Distribution of

Electrical Energy

NATIONAL FIRE PROTECTION ASSOCIATION (NFPA)

NFPA 70	(1999) National Electrical Code

UNDERWRITERS LABORATORIES (UL)

UL 6	(1997) Rigid Metal Conduit
UL 510	(1994; Rev thru Apr 1998) Polyvinyl Chloride, Polyethylene, and Rubber Insulating Tape
UL 514A	(1996; Rev Dec 1999) Metallic Outlet Boxes

1.2 SUBMITTALS

Government approval is required for submittals with a "G" designation; submittals not having a "G" designation are for information only. When used, a designation following the "G" designation identifies the office that will review the submittal for the Government. The following shall be submitted in accordance with Section 01330 SUBMITTAL PROCEDURES:

SD-02 Shop Drawings

Drawings; G, __EC___

Sixcopies of detail drawings consisting of a complete list of equipment and material including manufacturer's descriptive and technical literature, catalog cuts, results of system design calculations including soil-resistivity, installation instructions and certified test data stating the maximum recommended anode current output density and the rate of gaseous production if any at that current density. Detail drawings shall contain complete wiring and schematic diagrams and any other details required to demonstrate that the system has been coordinated and will function properly as a unit.

Contractor's Modifications; G, __EC___

Six copies of detail drawings showing proposed changes in location, scope of performance indicating any variations from, additions to, or clarifications of contract drawings. The drawings shall show proposed changes in anode arrangement, anode size and number, anode materials and layout details, conduit size, wire size, mounting details, wiring diagram, method for electrically-isolating each pipe, and any other pertinent information to proper installation and performance of the system.

SD-03 Product Data

Equipment; G, __EC___

Within 30 days after receipt of notice to proceed, an itemized list of equipment and materials including item number, quantity, and manufacturer of each item. The list shall be accompanied by a description of procedures for each type of testing and adjustments, including testing of coating for thickness and holidays. Installation of materials and equipment shall not commence until this submittal is approved.

Spare Parts; __G___, __RE___

Spare parts data for each different item of material and equipment specified, after approval of detail drawings and not later than six (6) months prior to the date of beneficial occupancy. The data shall include a complete list of parts, special tools, and supplies, with current unit prices and source of supply. One (1) spare anode of each type shall be furnished.

SD-06 Test Reports

Tests and Measurements; G, __RE___

Test reports in booklet form tabulating all field tests and measurements performed, upon completion and testing of the installed system and including close interval potential survey, casing and interference tests, final system test verifying protection, insulated joint and bond tests, and holiday coating test. A certified test report showing that the connecting method has passed a 120-day laboratory test without failure at the place of connection, wherein the anode is subjected to maximum recommended current output while immersed in a three percent sodium chloride solution.

Contractor's Modifications; G, __RE___

Final report regarding Contractor's modifications. The report shall include pipe-to-soil measurements throughout the affected area, indicating that the modifications improved the overall conditions, and current measurements for anodes. The following special materials and information are required: taping materials and conductors; zinc grounding cell, installation and testing procedures, and equipment; coating material; system design calculations for anode number, life, and parameters to achieve protective potential; backfill shield material and installation details showing waterproofing; bonding and waterproofing details; insulated resistance wire; exothermic weld equipment and material.

SD-07 Certificates

Cathodic Protection System; __G___, __RE___

Proof that the materials and equipment furnished under this section conform to the specified requirements contained in the referenced standards or publications. The label or listing by the specified agency will be acceptable evidence of such compliance.

Services of "Corrosion Expert"; G, __RE___

Evidence of qualifications of the "corrosion expert."

a. The "corrosion expert's" name and qualifications shall be certified in writing to the Contracting Officer prior to the start of construction.

b. Certification shall be submitted giving the name of the firm, the number of years of experience, and a list of not less than five (5) of the firm's installations three (3) or more years old that have been tested and found satisfactory.

SD-10 Operation and Maintenance Data

Cathodic Protection System; __G___, __RE___

Before final acceptance of the cathodic protection system, six copies of operating manuals outlining the step-by-step procedures required for system startup, operation, adjustment of current flow, and shutdown. The manuals shall include the manufacturer's name, model number, service manual, parts list, and brief description of all equipment and their basic operating features. Six copies of maintenance manual, listing routine maintenance procedures, recommendation for maintenance testing, possible breakdowns and repairs, and troubleshooting guides. The manuals shall include single-line diagrams for the system as installed; instructions in making pipe-to-reference cell and tank-to-reference cell potential measurements and frequency of monitoring; instructions for dielectric connections, interference and sacrificial anode bonds; instructions shall include precautions to ensure safe conditions during repair of pipe or other metallic systems. The instructions shall be neatly bound between permanent covers and titled "Operating and Maintenance Instructions." These instructions shall be submitted for the Contracting Officer's approval. The instructions shall include the following:

a. As-built drawings, to scale of the entire system, showing the locations of the piping, location of all anodes and test stations, locations of all insulating joints, and structure-to-reference cell potentials as measured during the tests required by Paragraph: TESTS AND MEASUREMENTS, of this section.

b. Recommendations for maintenance testing, including instructions in making pipe-to-reference cell potential measurements and frequency of testing.

c. All maintenance and operating instructions and nameplate data shall be in English.

d. Instructions shall include precautions to insure safe

conditions during repair of pipe system.

Training Course; __G___, __RE___

The proposed Training Course Curriculum (including topics and dates of discussion) indicating that all of the items contained in the operating and maintenance instructions, as well as demonstrations of routine maintenance operations, including testing procedures included in the maintenance instructions, are to be covered.

1.3 GENERAL REQUIREMENTS

The Contractor shall furnish and install a complete, operating, sacrificial anode cathodic protection system in complete compliance with NFPA 70, with all applicable Federal, State, and local regulations and with minimum requirements of this contract. In addition to the minimum requirements of these specifications, The services required include planning, installation, adjusting and testing of a cathodic protection system, using sacrificial anodes for cathodic protection of the Water lines, their connectors and lines under the slab or floor foundation. The cathodic protection system shall include anodes, cables, connectors, corrosion protection test stations, and any other equipment required for a complete operating system providing the NACE criteria of protection as specified. Insulators are required whenever needed to insulate the pipes from any other structure. Any pipe crossing the another water pipe pipe shall have a test station. The cathodic protection shall be provided on Water pipes.

1.3.1 Services of "Corrosion Expert"

The Contractor shall obtain the services of a "corrosion expert" to supervise, inspect, and test the installation and performance of the cathodic protection system. "Corrosion expert" refers to a person, who by thorough knowledge of the physical sciences and the principles of engineering and mathematics, acquired by professional education and related practical experience, is qualified to engage in the practice of corrosion control of buried or submerged metallic surfaces. Such a person must be accredited or certified by the National Association of Corrosion Engineers (NACE) as a NACE Accredited Corrosion Specialist or a NACE certified Cathodic Protection (CP) Specialist or be a registered professional engineer who has certification or licensing that includes education and experience in corrosion control of buried or submerged metallic piping and tank systems, if such certification or licensing includes 5 years experience in corrosion control on underground metallic surfaces of the type under this contract. The "corrosion expert" shall make at least 3 visits to the project site. The first of these visits shall include obtaining soil resistivity data, acknowledging the type of pipeline coatings to be used and reporting to the Contractor the type of cathodic protection required. Once the submittals are approved and the materials delivered, the "corrosion expert" shall revisit the site the ensure the Contractor understands installation practices and laying out the components. The third visit shall involve testing the installed cathodic protection systems and training applicable personnel on proper maintenance techniques. The "corrosion expert" shall supervise installation and

testing of all cathodic protection.

1.3.2 Contractor's Modifications

The specified system is based on a complete system with magnesium sacrificial anodes. The Contractor may modify the cathodic protection system after review of the project, site verification, and analysis, if the proposed modifications include the anodes specified and will provide better overall system performance. The modifications shall be fully described, shall be approved by the Contracting Officer's representative, and shall meet the following criteria. The proposed system shall achieve a minimum pipe-to-soil "instant off" potential of minus 850 millivolts with reference to a saturated copper-copper sulfate reference cell on the underground components of the piping or other metallic surface. The Contractor shall take resistivity measurements of the soil in the vicinity of the pipes and ground bed sites. Based upon the measurements taken, the current and voltage shall be required to produce a minimum of minus 850 millivolts "instant off" potential between the structure being tested and the reference cell. This potential shall be obtained over 95 percent of the metallic area. The anode system shall be designed for a life of twenty-five (25) years of continuous operation.

1.3.3 Isolators

Isolators are required to insulate the indicated pipes from any other structure. Isolators shall be provided with lightning protection and a test station as shown.

1.3.4 Anode and Bond Wires

Magnesium anodes with an unpackaged weight of _17__pounds shall be provided uniform distances along the metallic pipe lines. Test stations shall be provided for these anodes. These anodes shall be in addition to anodes for the pipe under concrete slab and casing requirements. For each cathodic system, the metallic components and structures to be protected shall be made electrically continuous. This shall be accomplished by installing bond wires between the various structures. Bonding of existing buried structures may also be required to preclude detrimental stray current effects and safety hazards. Provisions shall be included to return stray current to its source without damaging structures intercepting the stray current. The electrical isolation of underground facilities in accordance with acceptable industry practice shall be included under this section. All tests shall be witnessed by the Contracting Officer.

1.3.5 Surge Protection

Approved zinc grounding cells or sealed weatherproof lightning arrestor devices shall be installed across insulated flanges or fittings installed in underground piping as indicated on the drawings. The arrestor shall be gapless, self-healing, solid state type. Zinc anode composition shall conform to ASTM B 418, Type II. Lead wires shall be number 6 AWG copper with high molecular weight polyethylene (HMWPE) insulation. The zinc grounding cells shall not be prepackaged in backfill but shall be installed as detailed on the drawings. Lightning arrestors or zinc grounding cells

are not required for insulated flanges on metallic components used on nonmetallic piping systems.

1.3.6 Summary of Services Required

The scope of services shall include, but shall not be limited to, the following:

a. Close-interval potential surveys.

b. Cathodic Protection Systems.

c. System testing.

d. Casing corrosion control.

e. Interference testing.

f. Training.

g. Operating and maintenance manual.

h. Insulator testing and bonding testing.

i. Coating and holiday testing shall be submitted within 45 days of notice to proceed.

1.3.7 Nonmetallic Pipe System

In the event pipe other than metallic pipe is approved and used in lieu of metallic pipe, all metallic components of this pipe system shall be protected with cathodic protection. Detailed drawings of cathodic protection for each component shall be submitted to the Contracting Officer for approval within 45 days after date of receipt of notice to proceed, and before commencement of any work.

1.3.7.1 Coatings

Coatings for metallic components shall be as required for metallic fittings. Protective covering (coating and taping) shall be completed and tested on each metallic component (such as valves, hydrants and fillings). This covering shall be as required for underground metallic pipe. Each test shall be witnessed by the Contracting Officer. Coatings shall be selected, applied, and inspected in accordance with NACE RP0190 and as specified in these specifications. The use of nonmetallic pipe does not change other requirements of the specifications. Any deviations due to the use of nonmetallic pipe shall be submitted for approval.

1.3.7.2 Tracer Wire

When a nonmetallic pipe line is used to extend or add to an existing metallic line, an insulated No. 8 AWG copper wire shall be thermit-welded to the existing metallic line and run the length of the new nonmetallic line. This wire shall be used as a locator tracer wire and to maintain

continuity to any future extensions of the pipe line.

1.3.8 Tests of Components

A minimum of four (4) tests shall be made at each metallic component in the piping system. Two (2) measurements shall be made directly over the anodes and the other two (2) tests shall be over the outer edge of the component, but at the farthest point from the anodes. Structure and pipes shall be shown with the cathodic protection equipment. All components of the cathodic protection system shall be shown on drawings, showing their relationship to the protected structure or component. A narrative shall describe how the cathodic protection system will work and provide testing at each component. Components requiring cathodic protection shall include but not be limited to the following:

a. Pipes under the floor slab or foundations.

b. PIV.

c. Shutoff valves.

d. Metallic pipe extended from aboveground locations.

e. Each connector or change-of-direction device.

f. Any metallic pipe component or section.

g. Backflow preventor.

h. Culvert.

1.3.9 Drawings

Detailed drawings shall be provided showing location of anodes, insulated fittings, test stations, permanent reference cells, and bonding. Locations shall be referenced to two (2) permanent facilities or mark points.

1.3.10 Electrical Potential Measurements

All potential tests shall be made at a minimum of 10 foot intervals witnessed by the Contracting Officer. Submittals shall identify test locations on separate drawing, showing all metal to be protected and all cathodic protection equipment. Test points equipment and protected metal shall be easily distinguished and identified.

1.3.11 Achievement of Criteria for Protection

All conductors, unless otherwise shown, shall be routed to or through the test stations. Each system provided shall achieve a minimum pipe-to-soil "instant off" potential of minus 850 millivolt potentials with reference to a saturated copper-copper-sulfate reference cell on all underground components of the piping. Based upon the measurements taken, the current and voltage of the anodes should be adjusted as required to produce a minimum of minus 850 millivolts "instant off" potential between the

structure being tested and the reference cell. This potential should be obtained over 95 percent of the metallic area. This must be achieved without the "instant off" potential exceeding 1150 millivolts. Testing will be witnessed by the Contracting Officer. Additional anodes shall be provided by the Contractor if required to achieve the minus 850 millivolts "instant off". Although acceptance criteria of the cathodic protection systems are defined in NACE RP0169, for this project the "instant off" potential of minus 850 millivolts is the only acceptable criteria.

1.3.12 Metallic Components and Typicals

a. Metallic components: As a minimum, each metallic component shall be protected with two (2) magnesium anodes. This number of anodes is required to achieve minus 850 millivolts "instant off" potential on the metallic area and at the same time not provide overvoltage above 1150 millivolts "instant off." As a minimum, the magnesium anode unpackaged weight shall be 17 pounds. The magnesium anodes shall be located on each side of the metallic component and routed through a test station.

b. Fire Hydrants: Fire hydrant pipe components shall have a minimum of two (2) anodes. These magnesium anodes shall have an unpackaged weight of 17 pounds.

c. Pipe Under Concrete Slab: Pipe under concrete slab shall have a minimum of 2 magnesium anodes. These magnesium anodes shall have an unpackaged weight of 17 pounds. Pipe under concrete slab shall have 2 permanent reference electrodes located under the slab. One (1) permanent reference electrode shall be located where the pipe enters the concrete slab. All conductors shall be routed to a test station.

d. Valves: Each valve shall be protected with 2 magnesium anodes. The magnesium anode shall have an unpackaged weight of 17 pounds.

e. Metallic Pipe Component or Section: Each section of metallic pipe shall be protected with 2 magnesium anodes. The magnesium anodes shall have an unpackaged weight of 17 pounds.

f. Connectors or Change-of-Direction Devices: Each change-of-direction device shall be protected with 2 magnesium anodes. The magnesium anode shall have an unpackaged weight of 17 pounds.

1.3.13 Metallic Component Coating

Coatings for metallic components shall be as required for metallic fittings as indicated. This will include fire hydrants, T's, elbows, valves, etc. Coatings shall be selected, applied, and inspected in accordance with NACE RP0190 and as specified in these specifications.

PART 2 PRODUCTS

2.1 MAGNESIUM ANODES

2.1.1 Anode Composition

Anodes shall be of high-potential magnesium alloy, made of primary magnesium obtained from sea water or brine, and not made from scrap metal. Magnesium anodes shall conform to ASTM B 843 and to the following analysis (in percents) otherwise indicated:

Aluminum, max.	0.010
Manganese, max.	0.50 to 1.30
Zinc	0.05
Silicon, max.	0.05
Copper, max.	0.02
Nickel, max.	0.001
Iron, Max.	0.03
Other impurities, max.	0.05 each or 0.3 max. total
Magnesium	Remainder

The Contractor shall furnish spectrographic analysis on samples from each heat or batch of anodes used on this project.

2.1.2 Dimensions and Weights

Dimensions and weights of anodes shall be approximately as follows:

TYPICAL MAGNESIUM ANODE SIZE

(Cross sections may be round, square, or D shaped)

NOMINAL WT. LBS.	APPROX. SIZE (IN)	NOMINAL GROSS WT lb PACKAGED IN BACKFILL	NOMINAL PACKAGE DIMENSIONS (IN)
3	3 X 3 X 5	8	5-1/4 X 5-1/4 X 8
5	3 X 3 X 8	13	5-1/4 X 5-1/4 X 11-1/4
9	3 X 3 X 14	27	5-1/4 X 20
12	4 X 4 X 12	32	7-1/2 X 18
17	4 X 4 X 17	45	7-1/2 X 24
32	5 X 5 X 20-1/2	68	8-1/2 X 28
50	7 X 7 X 16	100	10 X 24

2.1.3 Packaged Anodes

Anodes shall be provided in packaged form with the anode surrounded by specially-prepared quick-wetting backfill and contained in a water permeable cloth or paper sack. Anodes shall be centered by means of spacers in the backfill material. The backfill material shall have the following composition, unless otherwise indicated:

Material	Approximate Percent by Weight
Gypsum	75
Bentonite	20
Sodium Sulphate	5

Total	100

2.1.4 Wire

2.1.4.1 Wire Requirements

Wire shall be No. AWG solid copper wire, not less than 10 feet long, unspliced, complying with NFPA 70, Type RHH insulation. Connecting wires for magnesium anodes shall be factory installed with the place or emergence from the anode in a cavity sealed flush with a dielectric sealing compound.

2.1.4.2 Anode Header Cable

Cable for anode header and distribution shall be No. __4___ AWG stranded copper wire with type CP high molecular weight polyethylene, 7/64 inch thick insulation, 600-volt rating, in accordance with NEMA WC 5.

2.2 MISCELLANEOUS MATERIALS

2.2.1 Electrical Wire

Wire shall be No. 12 AWG stranded copper wire with NFPA 70, Type RHW-USE insulation. Polyethylene insulation shall comply with the requirements of ASTM D 1248 and shall be of the following types, classes, and grades:

High-molecular weight polyethylene shall be Type I, Class C, Grade E5.

High-density polyethylene shall be Type III, Class C, Grade E3.

2.2.1.1 Wire Splicing

Connecting wire splicing shall be made with copper compression connectors or exothermic welds, following instructions of the manufacturer. Single split-bolt connections shall not be used. Sheaths for encapsulating electrical wire splices to be buried underground shall fit the insulated wires entering the spliced joints and epoxy potting compound shall be as specified below.

2.2.1.2 Test Wires

Test wires shall be AWG No. 12 stranded copper wire with NFPA 70, Type TW or RHW or polyethylene insulation.

2.2.1.3 Resistance Wire

Resistance wire shall be AWG No. 16 or No. 22 nickel-chromium wire.

2.2.2 Conduit

Rigid galvanized steel conduit and accessories shall conform to UL 6. Non metallic conduit shall conform to NEMA TC 2.

2.2.3 Test Boxes and Junctions Boxes

Boxes shall be outdoor type conforming to UL 514A.

2.2.4 Joint, Patch, Seal, and Repair Coating

Sealing and dielectric compound shall be a black, rubber based compound that is soft, permanently pliable, tacky, moldable, and unbacked. Compound shall be applied as recommended by the manufacturer, but not less than 1/2-inch thick. Coating compound shall be cold-applied coal-tar base mastic . Pressure-sensitive vinyl plastic electrical tape shall conform to UL 510.

2.2.5 Backfill Shields

Shields shall consist of approved pipeline wrapping or fiberglass-reinforced, coal-tar impregnated tape, or plastic weld caps, specifically made for the purpose and installed in accordance with the manufacturer's recommendations. When joint bonds are required, due to the use of mechanical joints, the entire joint shall be protected by the use of a kraft paper joint cover. The joint cover shall be filled with poured-in, hot coat-tar enamel.

2.2.6 Epoxy Potting Compound

Compound for encapsulating electrical wire splices to be buried underground shall be a two package system made for the purpose.

2.2.7 Test Stations

Stations shall be of the flush-curb-box type and shall be the standard product of a recognized manufacturer. Test stations shall be complete with an insulated terminal block having the required number of terminals. The test station shall be provided with a lockable over and shall have an embossed legend, "C.P. Test." Test stations may be constructed of nonmetallic materials. However, if nonmetallic materials are utilized, as a minimum, the materials shall be resistant to damage from ultraviolet radiation, contain good color retention qualities, contain high strength qualities, and be resistant to accidental or vandalistic impacts that might be normally encountered in the environment for which they are to be installed. The test stations shall be listed for the particular application for which they are to be utilized.

2.2.8 Resistance Bonds

Resistance bonds should be adjusted as outlined in this specification. Alternate methods may be used if they are approved by the Contracting Officer.

2.2.9 Stray Current Measurements

Stray current measurements should be performed at each test station. Stray currents resulting from lightning or overhead alternating current (AC) power transmission systems shall be mitigated in accordance with NACE RP0177.

2.2.10 Resistance Wire

Wire shall be No. 16 or No. 22 nickel-chromium wire with TW insulation.

2.2.11 Electrical Connections

Electrical connections shall be done as follows:

a. Exothermic welds shall be "Cadweld",or an approved equal. Use of this material shall be in strict accordance with the manufacturer's recommendations.

b. Electrical-shielded arc welds shall be approved for use on steel pipe by shop drawing submittal action.

c. Brazing shall be as specified in Paragraph: Lead Wire Connections.

2.2.12 Electrical Tape

Pressure-sensitive vinyl plastic electrical tape shall conform to UL 510.

PART 3 EXECUTION

3.1 CRITERIA OF PROTECTION

Acceptance criteria for determining the adequacy of protection on a buried underground metallic component shall be in accordance with NACE RP0169 and as specified below.

3.1.1 Iron and Steel

The following method (a) shall be used for testing cathodic protection voltages. If more than one method is required, method (b) shall be used.

a. A negative voltage of at least minus 850 millivolts as measured between the underground component and a saturated copper-copper sulphate reference electrode connecting the earth (electrolyte) directly over the underground component. Determination of this voltage shall be made with the cathodic protection system in operation. Voltage drops shall be considered for valid interpretation of this voltage measurement. A minimum of minus 850 millivolts "instant off" potential between the underground component being tested and the reference cell shall be achieved over 95 percent of the area of the structure. Adequate number of measurements shall be obtained over the entire structure, pipe, tank, or other metallic component to verify and record achievement of minus 850 millivolts "instant off." This potential shall be obtained over 95 percent of the total metallic area without the "instant off" potential exceeding 1200 millivolts.

b. A minimum polarization voltage shift of 100 millivolts as measured between the underground component and a saturated copper-copper sulphate reference electrode contacting the earth directly over the underground component. This polarization voltage shift shall be determined by interrupting the protective current and measuring the polarization

decay. When the protective current is interrupted, an immediate voltage shift will occur. The voltage reading, after the immediate shift, shall be used as the base reading from which to measure polarization decay. Measurements achieving 100 millivolts decay shall be made over 95 percent of the metallic surface being protected.

c. For any metallic component, a minimum of four (4) measurements shall be made using subparagraph (a), above, and achieving the "instant off" potential of minus 850 millivolts. Two (2) measurements shall be made over the anodes and two (2) measurements shall be made at different locations near the component and farthest away from the anode.

3.1.2 Aluminum

Aluminum underground component shall not be protected to a potential more negative than minus 1200 millivolts, measured between the underground component and a saturated copper-copper sulphate reference electrode contacting the earth, directly over the metallic component. Resistance, if required, shall be inserted in the anode circuit within the test station to reduce the potential of the aluminum to a value which will not exceed a potential more negative than minus 1200 millivolts. Voltage shift criterion shall be a minimum negative polarization shift of 100 millivolts measured between the metallic component and a saturated copper-copper sulphate reference electrode contacting the earth, directly over the metallic component. The polarization voltage shift shall be determined as outlined for iron and steel.

3.1.3 Copper Piping

For copper piping, the following criteria shall apply: A minimum of 100 millivolts of cathodic polarization between the structure surface and a stable reference electrode contacting the electrolyte. The polarization voltage shift shall be determined as outlined for iron and steel.

3.2 ANODE STORAGE AND INSTALLATION

3.2.1 Anode Storage

Storage area for magnesium anodes will be designated by the Contracting Officer. If anodes are not stored in a building, tarps or similar protection should be used to protect anodes from inclement weather. Packaged anodes, damaged as a result of improper handling or being exposed to rain, shall be resacked by the Contractor and the required backfill added.

3.2.2 Anode Installation

Unless otherwise authorized, installation shall not proceed without the presence of the Contracting Officer. Anodes of the size specified shall be installed to the depth indicated and at the locations shown. Locations may be changed to clear obstructions with the approval of the Contracting Officer. Anodes shall be installed in sufficient number and of the required type, size, and spacing to obtain a uniform current distribution over the surface of the structure. The anode system shall e designed for a

life of 25 years of continuous operation. Anodes shall be installed as indicated in a dry condition after any plastic or waterproof protective covering has been completely removed from the water permeable, permanent container housing the anode metal. The anode connecting wire shall not be used for lowering the anode into the hole. The annular space around the anode shall be backfilled with fine earth in 6 inch layers and each layer shall be hand tamped. Care must be exercised not to strike the anode or connecting wire with the tamper. Approximately 5 gallonsof water shall be applied to each filled hole after anode backfilling and tamping has been completed to a point about 6inches above the anode. After the water has been absorbed by the earth, backfilling shall be completed to the ground surface level.

3.2.2.1 Groups of Anodes

Groups of anodes, in quantity and location shown, shall be connected to an anode header cable. The anode header cable shall make contact with the structure to be protected only through a test station. Anode lead connection to the anode header cable shall be made by an approved crimp connector or exothermic weld and splice mold kit with appropriate potting compound.

3.2.2.2 Welding Methods

Connections to metallic devices shall be made by exothermic weld methods manufactured for the type of equipment supplied. Electric arc welded connections and other types of welded connections to ferrous pipe and structures shall be approved before use.

3.2.3 Anode Placement - General

Packaged anodes shall be installed completely dry, and shall be lowered into holes by rope sling or by grasping the cloth gather. The anode lead wire shall not be used in lowering the anodes. The hole shall be backfilled with fine soil in 6inch layers and each layer shall be hand-tamped around the anode. Care must be exercised not to strike the anode or lead wire with the tamper. If immediate testing is to be performed, water shall be added only after backfilling and tamping has been completed to a point 6 inches above the anode. Approximately 2 gallons of water may be poured into the hole. After the water has been absorbed by the soil, backfilling and tamping may be completed to the top of the hole. Anodes shall be installed as specified or shown. In the event a rock strata is encountered prior to achieving specified augered-hole depth, anodes may be installed horizontally to a depth at least as deep as the bottom of the pipe, with the approval of the Contracting Officer.

3.2.4 Underground Pipeline

Anodes shall be installed at a minimum of 8 feet and a maximum of 10 feet from the line to be protected.

3.2.5 Installation Details

Details shall conform to the requirements of this specification. Details shown on the drawings are indicative of the general type of material required, and are not intended to restrict selection to material of any particular manufacturer.

3.2.6 Lead Wire Connections

3.2.6.1 Underground Pipeline (Metallic)

To facilitate periodic electrical measurements during the life of the sacrificial anode system and to reduce the output current of the anodes, if required, all anode lead wires shall be connected to a test station and buried a minimum of 24 inches in depth. The cable shall be No. 10 AWG, stranded copper, polyethylene or RHW-USE insulated cable. The cable shall make contact with the structure only through a test station. Resistance wire shall be installed between the cable and the pipe cable, in the test station, to reduce the current output, if required. Anode connections, except in the test station, shall be made with exothermic welding process, and shall be insulated by means of at least three (3) layers of electrical tape; and all lead wire connections shall be installed in a moistureproof splice mold kit and filled with epoxy resin. Lead wire-to-structure connections shall be accomplished by an exothermic welding process. All welds shall be in accordance with the manufacturer's recommendations. A backfill shield filled with a pipeline mastic sealant or material compatible with the coating shall be placed over the weld connection and shall be of such diameter as to cover the exposed metal adequately.

3.2.6.2 Resistance Wire Splices

Resistance wire connections shall be accomplished with silver solder and the solder joints wrapped with a minimum of three (3) layers of pressure-sensitive tape. Lead wire connections shall be installed in a moistureproof splice mold kit and filled with epoxy resin.

3.2.7 Location of Test Stations

Test stations shall be of the type and location shown and shall be curb box mounted. Buried insulating joints shall be provided with test wire connections brought to a test station. Unless otherwise shown, other test stations shall be located as follows:

a. At 1,000-foot intervals or less.

b. Where the pipe or conduit crosses any other metal pipe.

c. At both ends of casings under roadways and railways.

d. Where both sides of an insulating joint are not accessible above ground for testing purposes.

3.2.8 Underground Pipe Joint Bonds

Underground pipe having other than welded or threaded coupling joints shall be made electrically continuous by means of a bonding connection installed

across the joint.

3.3 ELECTRICAL ISOLATION OF STRUCTURES

3.3.1 Isolation Joints and Fittings

Isolating fittings, including main line isolating flanges and couplings, shall be installed aboveground, or within manholes, wherever possible. Where isolating joints must be covered with soil, they shall be fitted with a paper joint cover specifically manufactured for covering the particular joint, and the space within the cover filled with hot coal-tar enamel. Isolating fittings in lines entering buildings shall be located at least 12 inches above grade of floor level, when possible. Isolating joints shall be provided with grounding cells to protect against over-voltage surges or approved surge protection devices. The cells shall provide a low resistance across isolating joint without excessive loss of cathodic current.

3.4 TRENCHING AND BACKFILLING

Trenching and backfilling shall be in accordance with Section 02316 EXCAVATION, TRENCHING, AND BACKFILLING FOR UTILITY SYSTEMS.

3.5 TESTS AND MEASUREMENTS

3.5.1 Baseline Potentials

Each test and measurement will be witnessed by the Contracting Officer. The Contractor shall notify the Contracting Officer a minimum of five (5) working days prior to each test. After backfill of the pipe , the static potential-to-soil of the metallic components shall be measured. The locations of these measurements shall be identical to the locations specified for metallic components to-reference electrode potential measurements. The initial measurements shall be recorded.

3.5.2 Isolation Testing

Before the anode system is connected to the metallic component, an isolation test shall be made at each isolating joint or fitting. This test shall demonstrate that no metallic contact, or short circuit exists between the two isolated sections. Any isolating fittings installed and found to be defective shall be reported to the Contracting Officer.

3.5.2.1 Insulation Checker

A Model 601 insulation checker, as manufactured by "Gas Electronics", or an approved equal, using the continuity check circuit, shall be used for isolating joint (flange) electrical testing. Testing shall conform to the manufacturer's operating instructions. Test shall be witnessed by the Contracting Officer. An isolating joint that is good will read full scale on the meter. If an isolating joint is shorted, the meter pointer will be deflected or near zero on the meter scale. Location of the fault shall be determined from the instructions, and the joint shall be repaired. If an isolating joint is located inside a vault, the pipe shall be sleeved with

insulator when entering and leaving the vault.

3.5.2.2 Cathodic Protection Meter

A Model B3A2 cathodic protection meter, as manufactured by "M.C. Miller", or an approved equal, using the continuity check circuit, shall be used for isolating joint (flange) electrical testing. This test shall be performed in addition to the Model 601 insulation checker. Continuity is checked across the isolation joint after the test lead wire is shorted together and the meter adjusted to scale. A full-scale deflection indicates the system is shorted at some location. The Model 601 verifies that the particular insulation under test is good and the Model B3A2 verifies that the system is isolated. If the system is shorted, further testing shall be performed to isolate the location of the short.

3.5.3 Anode Output

As the anodes or groups of anodes are connected, current output shall be measured with an approved clamp-on milliammeter, calibrated shunt with a suitable millivoltmeter or multimeter, or a low resistance ammeter. (Of the three methods, the low-resistance ammeter is the least desirable and most inaccurate. The clamp-on milliammeter is the most accurate.) The valves obtained and the date, time, and location shall be recorded.

3.5.4 Reference Electrode Potential Measurements

Upon completion of the installation and with the entire cathodic protection system in operation, electrode potential measurements shall be made using a copper-copper sulphate reference electrode and a potentiometer-voltmeter, or a direct-current voltmeter having an internal resistance (sensitivity) of not less than 10 megohms per volt and a full scale of 10 volts. The locations of these measurements shall be identical to the locations used for baseline potentials. The values obtained and the date, time, and locations of measurements shall be recorded. No less than eight (8) measurements shall be made over any length of line or component. Additional measurements shall be made at each distribution service riser, with the reference electrode placed directly over the service line.

3.5.5 Location of Measurements

3.5.5.1 Piping or Conduit

For coated piping or conduit, measurements shall be taken from the reference electrode located in contact with the earth, directly over the pipe. Connection to the pipe shall be made at service risers, valves, test leads, or by other means suitable for test purposes. Pipe-to-soil potential measurements shall be made at intervals not exceeding 10 feet. The Contractor may use a continuous pipe-to-soil potential profile in lieu of 5 footinterval pipe-to-soil potential measurements. Additional measurements shall be made at each distribution service riser, with the reference electrode placed directly over the service line adjacent to the riser. Potentials shall be plotted versus distance to an approved scale. Locations where potentials do not meet or exceed the criteria shall be identified and reported to the Contracting Officer's representative.

3.5.5.2 Holiday Test

Any damage to the protective covering during transit and handling shall be repaired before installation. After field-coating and wrapping has been applied, the entire pipe shall be inspected by an electric holiday detector with impressed current in accordance with NACE RP0188 using a full-ring, spring-type coil electrode. The holiday detector shall be equipped with a bell, buzzer, or other type of audible signal which sounds when a holiday is detected. Holidays in the protective covering shall be repaired upon detection. Occasional checks of holiday detector potential will be made by the Contracting Officer to determine suitability of the detector. Labor, materials, and equipment necessary for conducting the inspection shall be furnished by the Contractor. The coating system shall be inspected for holes, voids, cracks, and other damage during installation.

3.6 TRAINING COURSE

The Contractor shall conduct a training course for the operating staff as designated by the Contracting Officer. The training period shall consist of a total of 4 hours of normal working time and shall start after the system is functionally completed but prior to final acceptance tests. The field instructions shall cover all of the items contained in the operating and maintenance instructions, as well as demonstrations of routine maintenance operations, including testing procedures included in the maintenance instructions. At least 14 days prior to date of proposed conduction of the training course, the training course curriculum shall be submitted for approval, along with the proposed training date. Training shall consist of demonstration of test equipment, providing forms for test data and the tolerances which indicate that the system works.

3.7 CLEANUP

The Contractor shall be responsible for cleanup of the construction site. All paper bags, wire clippings, etc., shall be disposed of as directed. Paper bags, wire clippings and other waste shall not be put in bell holes or anodes excavation.

3.8 MISCELLANEOUS INSTALLATION AND TESTING

3.8.1 Coatings

All aboveground pipeline shall be coated as indicated or as approved. The coating shall have a minimum thickness of 7 mil. The pipeline coating shall be in accordance with all applicable Federal, State, and local regulations.

3.8.2 Excavation

In the event rock is encountered in providing the required depth for anodes, the Contractor shall determine an alternate approved location and, if the depth is still not provided, an alternate plan shall be submitted to the Contracting Officer. Alternate techniques and depths must be approved prior to implementation.

3.9 SPARE PARTS

After approval of shop drawings, and not later than three (3) months prior to the date of beneficial occupancy, the Contractor shall furnish spare parts data for each different item of material and equipment specified. The data shall include a complete list of parts, special tools, and supplies, with current unit prices and source of supply. In addition, the Contractor shall supply information for material and equipment replacement for all other components of the complete system, including anodes, cables, splice kits and connectors, corrosion test stations, and any other components not listed above.

3.10 SEEDING

Seeding shall be done by the Contractor, as directed, in all unsurfaced locations disturbed by this construction. In areas where grass cover exists, it is possible that sod can be carefully removed, watered, and stored during construction operations, and replaced after the operations are completed since it is estimated that no section of pipeline should remain uncovered for more than two (2) days. The use of sod in lieu of seeding shall require approval by the Contracting Officer.

3.11 SYSTEM TESTING

The Contractor shall submit a report including potential measurements taken at adequately-close intervals to establish that minus 850 millivolts potential, "instant-off" potential, is provided, and that the cathodic protection is not providing interference to other foreign pipes causing damage to paint or pipes. The report shall provide a narrative describing how the criteria of protection is achieved without damaging other pipe or structures in the area.

3.12 CLEARING OF TREES AND UNDERBRUSH

In the areas of the anode beds, all trees and underbrush shall be cleared and grubbed to the limits shown or indicated.

-- End of Section --

DIVISION 14 - CONVEYING SYSTEMS

(NOT USED)

DIVISION 15 - MECHANICAL

Section No.	Title
15600	Re-circulation System

15600 RECIRCULATION SYSTEM

A. GENERAL:

1. References. The publications listed below form a part of this specification to the extent referenced and shall be the latest version available. The publications are referred to in the text by basic designation only.

AMERICAN SOCIETY FOR TESTING AND MATERIALS (ASTM)

ASTM A 105	Forgings, Carbon Steel, for Piping Components
ASTM A 193	Alloy-Steel and Stainless Steel Bolting Materials for High-Temperature Service
ASTM D 1784	Poly(Vinyl Chloride) (PVC) Plastic Pipe Fittings
ASTM D 1785	Poly(Vinyl Chloride) (PVC) Plastic Pipe, Schedules 40, 80, and 120
ASTM D 2241	Poly(Vinyl Chloride) (PVC) Pressure-Rated Pipe (SDR Series)
ASTM D 2464	Threaded Poly(Vinyl Chloride) (PVC) Plastic Pipe Fittings, Schedule 80
ASTM D 2466	Poly(Vinyl Chloride) (PVC) Plastic Pipe Fittings, Schedule 40
ASTM D 2467	Socket-Type Poly(Vinyl Chloride) (PVC) Plastic Pipe Fittings, Schedule 80
ASTM D 2564	Solvent Cements for Poly(Vinyl Chloride) (PVC) Plastic Pipe and Fittings
ASTM D 2672	Joints for IPS PVC Pipe Using Solvent Cement

ASTM D 2855	Making Solvent-Cemented Joints with Poly(Vinyl Chloride) (PVC) Pipe and Fittings
ASTM D 3139	Joints for Plastic Pressure Pipes Using Flexible Elastomeric Seals
ASTM D 3212	Joints for Drain and Sewer Plastic Pipes Using Flexible Elastomeric Seals
ASTM F 477	Standard Specification for Elastomeric Seals (Gaskets) for Joining Plastic Pipe

AMERICAN SOCIETY OF MECHANICAL ENGINEERS (ASME)

ASME B1.20.1	Pipe Threads, General Purpose (Inch)
ASME B16.5	Pipe Flanges and Flanged Fittings
ASME B16.21	Nonmetallic Flat Gaskets for Pipe Flanges

AMERICAN WATER WORKS ASSOCIATION (AWWA)

AWWA C110	Full Body Fittings
AWWA C111	Rubber-Gasket Joints for Ductile Iron Pressure Pipe and Fittings
AWWA C115	Flanges for Ductile Iron Pipe
AWWA C151	Ductile Iron Pipe, Centrifugally Cast in Metal Molds or Sand-lined Molds for Water or Other Liquids
AWWA C150	Thickness Design Ductile Iron Pipe

AWWA C153	SSB Fittings
AWWA C900	Standard for Polyvinyl Chloride (PVC) Pressure Pipe, 4 in. Through 12 in. for Water Distribution
AWWA C905	Standard for Polyvinyl Chloride (PVC) Water Transmission Pipe, Nominal Diameters 14 in. through 36 in.

FEDERAL SPECIFICATIONS (FS)

FS QQ-C-40	(Basic; Am 2) Caulking: Lead Wool and Lead Pig

MANUFACTURERS STANDARDIZATION SOCIETY OF THE VALVE AND FITTINGS INDUSTRY (MSS)

MSS SP-25	Standard Marking System for Valves, Fittings, Flanges and Unions

MILITARY SPECIFICATIONS (MS)

MS MIL-T-27730	(Rev A) Tape, Antiseize, Polytetrafluoroethylene, With Dispenser

NATIONAL SANITATION FOUNDATION (NSF)

NSF Std 14	Plastic Piping Components and Related Materials

2. General Requirements.

(a) Scope. This specification covers the requirements for materials and installation of pipe as sleeves and pressure piping.

(b) Standard Products. Materials and equipment shall be the standard products of a manufacturer regularly engaged in the manufacture of the materials and products. Items of equipment shall essentially duplicate equipment that has been in satisfactory use at least 2 years prior to bid opening.

(c) Verification of Dimensions. The Contractor shall become familiar with details of the work, verify dimensions in the field, and advise the Engineer of any discrepancy before performing any work.

(d) Welding. Metallic materials shall be welded in accordance with qualified procedures using performance-qualified welders and welding operators. Welding of metallic materials shall be as specified in accordance with Section: MISCELLANEOUS METAL.

3. Submittals. The following shall be submitted for Government review/approval:

A. Welding, SD06-GA-RE; The following shall be submitted for Government approval:

A copy of qualified procedures and a list of names and identification symbols of qualified welders and welding operators.

B. Piping/Sleeves/Conduit, SD04-GA-EC; The following shall be submitted for Government approval:

Detail drawings consisting of illustrations, schedules, performance charts, instructions, brochures, diagrams, and other information to illustrate the requirements and operations of piping/sleeves/conduit. Detail drawings including piping/sleeve/conduit layouts and locations of connections; dimensions for roughing-in, foundation, and support points; and schematic diagrams and/or connection and interconnection diagrams. Detail drawings shall indicate clearances required for maintenance and operation. Where piping/sleeves/conduit and equipment are to be supported other than as indicated, details shall include loadings and proposed support methods.

C. Materials and Equipment, SD13-FIO-RE; The following shall be submitted for Government review:

Where materials or equipment are specified to comply with requirements of AGA, ASME, ANSI, or AWWA proof of such compliance shall be provided. The label or listing of the specified agency will be acceptable evidence. In lieu of the label or listing, a written certificate may be submitted from an approved, nationally recognized testing organization equipped to perform such services, stating that the items have been tested and conform to the requirements and testing methods of the specified agency.

B. MATERIALS:

1. Pipe Joint Materials. Joints and gaskets materials shall conform to the following:

(a) Caulking Lead: FS QQ-C-40, Type I.

(b) Flange Gaskets. Gaskets shall be made of non-asbestos material in accordance with ASME B16.21. Gaskets shall be flat, 1/16 inch thick, and contain Arimid fibers bonded with Styrene Butadiene Rubber (SBR) or Nitro Butadiene Rubber (NBR). Gaskets shall be the full face or self centering flat ring type. Gaskets used for hydrocarbon service shall be bonded with NBR.

(c) PTFE Tape, for use with Threaded Metal or Plastic Pipe: MS MIL-T-27730.

(d) Flexible Elastomeric Seals, Gasketed Joints, and Gaskets: ASTM D 3139, ASTM D 3212, and ASTM F 477.

(e) Plastic Solvent Cement for PVC Plastic Pipe: ASTM D 2564 and ASTM D 2855.

(f) Flanged fittings including flanges, bolts, nuts, bolt patterns, etc. shall be in accordance with ASME B16.5 class 150 and shall have the manufacturers trademark affixed in accordance with MSS SP-25. Flange material shall conform to ASTM A 105. Bolts shall be high strength or intermediate

strength with material conforming to ASTM A 193 and shall be cadmium coated.

(g) All bolts, nuts, washers, lock washers, etc. for use on metallic or plastic pipe, fittings, couplings, joints, etc. shall be cadmium coated for protection against corrosion.

2. Pipe Materials. Pipe materials shall conform to the following:

(a) Ductile Iron Pipe: AWWA C150, C151. Ductile-iron pipe shall conform to AWWA C151, working pressure not less than 150 psi, unless otherwise shown or specified. Pipe shall be cement-mortar lined in accordance with AWWA C104. Linings shall be standard. When installed underground, pipe shall be encased with 10 mil thick polyethylene in accordance with AWWA C105. Flanged ductile iron pipe with threaded flanges shall be in accordance with AWWA C115.

(b) Ductile Iron Pipe Fittings: AWWA C110, C111, C153

(c) PVC Pipe and Fittings: AWWA C900, C905

(1) 3" and smaller - DR21 solvent welded and Schedule 40 PVC fittings.

(2) 4" through 12" - DR14 with Elastomeric Seal joints and Schedule 40 PVC fittings.

(3) 12" through 20" - DR25 with Elastomeric Seal joints and ductile iron fittings.

3. Ductile Iron Joints. Flanged joints shall be used when pipe is joined to fittings that are above ground. Push-on or mechanical joint fittings shall be used when pipe is buried. Wall pipe flange with seep ring shall be used when pipe is required to penetrate concrete wall openings.

(a) Rubber gasket joints for mechanical or push-on type joints shall conform

to the requirements of AWWA C111.

(b) Flanged pipe shall conform to the requirements of AWWA C115.

4. Polyvinyl Chloride (PVC) Plastic Pipe Joints. Pipe, couplings and fittings shall be manufactured of material conforming to ASTM D 1784, Class 12454.

(a) Pipe Less Than 4-inch Diameter:

(1) Screw-Joint: Pipe shall conform to dimensional requirements of ASTM D 1785 Schedule 80, with joints meeting requirements of 150 psi working pressure, 150 psi hydrostatic test pressure, unless otherwise shown or specified. Pipe couplings when used, shall be tested as required by ASTM D 2464.

(2) Elastomeric-Gasket Joint: Pipe shall conform to dimensional requirements of ASTM D 1785. Schedule 40 with joints meeting the requirements of 150 psi working pressure, 150 psi hydrostatic test pressure, unless otherwise shown or specified, or it may be pipe conforming to requirements of ASTM D 2241, elastomeric joint, with the following applications:

(3) Solvent Cement Joint: Pipe shall conform to dimensional requirements of ASTM D 1785 or ASTM D 2241 with joints meeting the requirements of 150 psi working pressure and 150 psi hydrostatic test pressure.

(b) Pipe 4-Inch through 12-Inch Diameter: Pipe, couplings and fittings 4-inch through 12-inch diameter shall conform to AWWA C900, Class 150, CIOD pipe dimensions, elastomeric-gasket joint, unless otherwise shown or specified.

(c) Pipe 14-Inch through 48-Inch Diameter: Pipe shall conform to AWWA C905 unless otherwise shown or specified.

(d) In additional to the above requirements, the pipe, couplings and fittings

shall conform to AWWA C900 and C905, and shall conform to cast iron outside diameter (CIOD) size dimensions.

5. Polyvinyl Chloride (PVC) Pipe Fittings.

(a) For pipe less than 4-inch diameter (100 mm), fittings for threaded pipe shall conform to requirements of ASTM D 2464, threaded to conform to the requirements of ASME B1.20.1 for use with Schedule 80 pipe and fittings, fittings for solvent cement jointing shall conform to ASTM D 2466 or ASTM D 2467, and fittings for elastomeric-gasket joint pipe shall be iron conforming to AWWA C110 or AWWA C111. Iron fittings and specials shall be cement-mortar lined (standard thickness) in accordance with AWWA C104.

(b) For pipe 4 inch diameter and larger, fittings and specials shall be in accordance with AWWA C110, 150 psi pressure rating unless otherwise shown or specified, except that profile of bell may have special dimensions as required by the pipe manufacturer; or may be fittings and specials of the same material as the pipe with elastomeric gaskets, all in conformance with AWWA C900. Iron fittings and specials shall be cement-mortar lined (standard thickness) in accordance with AWWA C104. Fittings shall be bell and spigot or plain end pipe, or as applicable. Ductile iron compact fittings shall be in accordance with AWWA C153.

6. Valves.

(a) Check Valves. Check valves shall be designed for a minimum working pressure of 150 psi or as indicated. Valves shall have a clear waterway equal to the full nominal diameter of the valve. Valves shall open to permit flow when inlet pressure is greater than the discharge pressure, and shall close tightly to prevent return flow when discharge pressure exceeds inlet pressure. The size of the valve, working pressure, manufacturer's name, initials, or trademark shall be cast on the body of each valve.

(1) Valves 2 inches and smaller shall be all bronze designed for screwed fittings, and shall conform to MSS SP-80, Class 150, Types 3 and 4 as suitable for the application.

(2) Valves larger than 2 inches shall be iron body, bronze mounted, shall have flanged ends, and shall be the non-slam type. Flanges shall be the Class 125 type conforming to ASME B16.1.

(b) Gate Valves. Gate valves shall be designed for a working pressure of not less than 150 psi. Valve connections shall be as required for the piping in which they are installed. Valves shall have a clear waterway equal to the full nominal diameter of the valve, and shall be opened by turning counterclockwise. The operating nut or wheel shall have an arrow, cast in the metal, indicating the direction of opening.

(1) Valves smaller than 3 inches shall be all bronze and shall conform to MSS SP-80, Type 1, Class 150.

(2) Valves 3 inches and larger shall be iron body, bronze mounted, and shall conform to AWWA C500. Flanges shall not be buried. An approved pit shall be provided for all flanged connections.

(3) Resilient-Seated Gate Valves: For valves 3 to 12 inches in size, resilient-seated gate valves shall conform to AWWA C509.

(c) Vacuum and Air Relief Valves. Vacuum and air relief valves shall be provided at required portions of the recirculation system as determined by the contractor after installation of the piping and shall be of the size and type that will release air and prevent the formation of a vacuum. The valves shall automatically release air when the lines are being filled with water and shall admit air into the line when water is being withdrawn in excess of the inflow. Valves shall be iron body with bronze trim and stainless steel float and installed with standard nipples or other attachements to the piping system.

(d) Valve Boxes. Valve boxes shall be cast iron or concrete, except that concrete boxes may be installed only in locations not subjected to vehicular traffic. Cast-iron boxes shall be extension type with slide-type adjustment and with flared base. The minimum thickness of metal shall be 3/16 inch. Concrete boxes shall be the standard product of a manufacturer of precast concrete equipment. The word "VALVE" shall be cast in the cover. The box length shall adapt, without full extension, to the depth of cover required over the pipe at the valve location.

D. INSTALLATION:

1. General Requirements. Pipe materials, including couplings, for pressure service and for use as sleeves shall be installed as indicated and as specified herein. All plastic pipe, regardless of service, shall be installed complete with necessary fixtures, fittings, and accessories and shall meet the requirements of AWWA C900 and AWWA C905. All ductile iron pipe, regardless of service, shall be installed complete with necessary fixtures, fittings, and accessories and shall meet the requirements of AWWA C150 and AWWA C151. All underground pressure piping shall be at least 12 inches below the average local frost depth.

(a) Pipe, Fittings, and Connections.

(1) Cutting and Repairing. The work shall be carefully laid out in advance, and unnecessary cutting of construction shall be avoided. Damage to other work, piping, concrete, or equipment as a result of cutting shall be repaired by personnel skilled in the trade involved.

(2) Protection of Pipe. All pipe openings shall be closed with caps or plugs during installation. Pipe shall be tightly covered and protected against dirt, water, chemicals, and mechanical injury. Upon completion of the work, the pipe shall be thoroughly cleaned.

(3) Installation. Piping shall be installed as indicated. Pipe shall be accurately cut and worked into place without springing or forcing. Care shall be taken not to weaken any structural portions. Change in direction shall be made with appropriate fittings. The center-line radius of bends shall be not more than 4 inches offset in a 20 foot joint. All changes of direction for pipe sleeves shall be by long radius elbows of the same diameter or multiple sections of radius elbows to make the sleeves accessible for future piping. Bent, cracked, or otherwise damaged pipe will not be acceptable.

a) Piping in Concrete: all PVC piping embedded in concrete shall be protected from damage during pouring of the concrete and shall not be set directly upon excavated rock. As necessary, PVC pipe will be embedded in concrete where rock must be excavated (trenched) in order to lay the pipe.

b) Piping in Earth: all PVC piping embedded in earth shall be trenched 4" below the bottom of the pipe and 12" wider than the pipe outside diameter. Pipe shall be laid on a 4" pervious (see section "EARTHWORK (CHANNEL)" for definition of pervious) cushion, uniformly sloped without humps or depressions. Trench shall be backfilled with clean, sharp pervious material to 4" above the top of the pipe. Backfill shall be applied in lifts and tamped to prevent settling. Compaction requirements shall be per Specification Section "EARTHWORK (CHANNEL)".

EXCEPTION TO ABOVE PARAGRAPH: Pipe laid through the impervious fill behind dam #3 walls, shall be backfilled using the same impervious material. SAND OR

SIMILAR MATERIAL SHALL NOT BE USED IN THIS AREA.

c) Thrust blocking shall be provided for all changes of direction in the manner detailed on drawings.

(4) Expansion and Contraction of Piping. Provisions shall be made throughout for expansion and contraction of pipe. Risers shall be securely anchored as required.

(5) Deflection of Ductile-Iron Pipe. The maximum allowable deflection shall be as given in AWWA C600. If the alignment requires deflection in excess of the above limitations, special bends or a sufficient number of shorter lengths of pipe shall be furnished to provide angular deflections within the limit set forth.

(6) Placing and Laying of All Piping. Pipe and accessories shall be carefully lowered into the trench by means of derrick, ropes, belt slings, or other authorized equipment. Under no circumstances shall any of the water-line materials be dropped or dumped into the trench. Care shall be taken to avoid abrasion of the pipe coating. Except where necessary in making connections with other lines or as authorized by the Engineer, pipe shall be laid with the bells facing in the direction of laying. The full length of each section of pipe shall rest solidly upon the pipe bed, with recesses excavated to accommodate bells, couplings, and joints. Pipe that has the grade or joint disturbed after laying shall be taken up and relaid. Pipe shall not be laid in water or when trench conditions are unsuitable for the work. Water shall be kept out of the trench until joints are complete. When work is not in progress, open ends of pipe, fittings, and valves shall be securely closed so that no trench water, earth, or other substance will enter the pipes or fittings. Where any part of the coating or lining is damaged, the repair shall be made by the Contractor at his expense in a satisfactory manner. Pipe ends left for future connections shall be valved, plugged, or capped, and anchored, as shown.

2. Jointing.

(a) Polyvinyl Chloride (PVC) Plastic Pipe.

(1) Pipe less than 4-inch diameter: Threaded joints shall be made by wrapping the male threads with approved thread tape or applying an approved lubricant, then threading the joining members together. The joint shall be tightened using strap wrenches to prevent damage to the pipe and/or fitting. To avoid excessive torque, joints shall be tightened no more than one thread past hand-tight. Preformed rubber-ring gaskets for elastomeric-gasket joints shall be made in accordance with requirements of ASTM F 477 and as required herein. All pipe ends for push-on joints shall be beveled to facilitate assembly and marked to indicate when the pipe is fully seated. The gasket shall be prelubricated to prevent displacement. The integral bell shall meet the requirements of ASTM D 3139. The manufacturer of the pipe or fitting shall supply the elastomeric gasket. Couplings shall be provided with stops or centering rings to assure that the coupling is centered on the joint. Solvent cement joints shall use sockets conforming to the requirements of ASTM D 2467. The solvent cement used shall meet the requirements of ASTM D 2564; the joint assembly shall be made in accordance with ASTM D 2855 and the manufacturer's specific recommendations.

(2) Pipe 4-inch through 12-inch diameter: Joints shall be elastomeric-gasket as specified in AWWA C900. Jointing procedure shall be as specified for pipe less than 4-inch diameter with configuration using elastomeric ring gasket.

(3) Pipe 14-inch through 48-inch diameter: Joints shall be elastomeric-gasket push-on joints made in accordance with ASTM D 3139.

(b) Ductile-Iron Pipe. Mechanical and push-on type joints shall be installed in accordance with AWWA C600 for buried lines or AWWA C606 for

grooved and shouldered pipe above ground or in pits.

(c) Valves. After delivery, valves, including those in hydrants, shall be drained to prevent freezing and shall have the interiors cleaned of all foreign matter before installation. Stuffing boxes shall be tightened and hydrants and valves shall be fully opened and fully closed to ensure that all parts are in working condition. Check, pressure reducing, vacuum, and air relief valves shall be installed in valve pits. Valves and valve boxes shall be installed where shown or specified, and shall be set plumb. Valve boxes shall be centered on the valves. Boxes shall be installed over each outside gate valve unless otherwise shown. Where feasible, valves shall be located outside the area of roads and streets. Earth fill shall be carefully tamped around each valve box or pit to a distance of 1.2 m (4 feet) on all sides of the box, or the undisturbed trench face if less than 1.2 m. (4 feet.)

(d) Thrust Restraint. Plugs, caps, tees and bends deflecting 11-1/4 degrees or more, either vertically or horizontally, on waterlines 4 inches in diameter or larger shall be provided with thrust restraints. Valves shall be securely anchored or shall be provided with thrust restraints to prevent movement. Thrust restraints shall be either thrust blocks or, for ductile-iron pipes, restrained joints.

(1) Thrust Blocks. Thrust blocking shall be concrete of a mix not leaner than: 1 cement, 2-1/2 sand, 5 gravel; and having a compressive strength of not less than 2,000 psi after 28 days. Blocking shall be placed between solid ground and the hydrant or fitting to be anchored. Unless otherwise indicated or directed, the base and thrust bearing sides of thrust blocks shall be poured directly against undisturbed earth. The sides of thrust blocks not subject to thrust may be poured against forms. The area of bearing shall be as shown or as directed. Blocking shall be placed so that the fitting joints will be accessible for repair. Steel rods and clamps, protected by galvanizing or by coating with bituminous paint, shall be used to anchor vertical down bends into gravity thrust blocks.

(2) Restrained Joints. For ductile-iron pipe, restrained joints shall be

designed by the Contractor or the pipe manufacturer in accordance with DIPRA-01.

(e) Joining Methods.

(1) Joints. Installation of pipe and fittings shall be made in accordance with the manufacturer's recommendations. Mitering of joints for elbows and notching of straight runs of pipe for tees will not be permitted. Socket joint assemblies shall be in accordance with ASTM D 2855. Gasket joint shall be in accordance with ASTM D 3139.

(2) Flanges. Use and installation of flanges shall be in accordance with local standards, ASME and AWWA requirements. Flanges shall be provided with sealing gaskets and appropriate supports.

(3) Threaded. Threaded joints shall have American Standard taper pipe threads conforming to ASME B1.20.1. Only male pipe threads shall be coated with graphite or with an approved graphite compound, or with an inert filler and oil, shall have a Polytetrafluoroethylene tape applied or other approved method for plastic pipe.

(4) Mechanically Coupled. Mechanical couplings may be used in conjunction with grooved pipe in lieu of unions, welded, flanges, or threaded joints. Designs which can only clamp on the bottom of the groove or which utilize gripping teeth or jaws, or which use misaligned housing bolt holes, or which require a torque wrench or torque specifications will not be permitted. Rigid grooved pipe couplings shall be for use with grooved end pipes, fittings, valves. Grooved fittings and couplings shall be designed for not less than the psi rating of the pipe to which it is connected and appropriate for static head plus the pumping head, and shall provide a water-tight joint. Grooved fittings and couplings, along with the gaskets or seal rings shall be provided from the same manufacturer. Grooves shall be

in accordance with the coupling manufacturer's latest published standards.

(5) Plastic Pipe Joints (Other than described above). Joints for plastic pipe materials shall be made in the following manner:

Pipe Material	Joint Method
PVC - for pressure service only	Couplings similar to (Rieber Technology or "IB") joints or equal for DR14, DR18, and DR25 pipe in sizes from 4" to 12". Couplings for pipe sizes larger than 12" shall be similar to those under 12" but shall be rated comparable to DR18, DR21, DR25 and DR26 pipe in sizes from 14" to 48".

(a) Pipe Sleeves. Pipe sleeves shall be furnished and set in their proper and permanent location.

(1) Sleeve Requirements. Pipe sleeves shall be fitted into place at the time of construction. Each sleeve and each seal assembly shall be sized as indicated or to fit the pipe and sleeve involved. Sleeves shall not be installed in structural members, except where indicated or approved.

(b) Supports. Pipe guides and anchors shall be provided and installed, whether or not indicated or specifically directed, to keep pipes in accurate alignment, to direct the expansion movement, to prevent buckling, swaying, and undue strain during and after installation and construction.

(c) Welded Installation. Metallic pipe weldments shall be as specified in accordance with Section: MISCELLANEOUS METAL. Mitering or notching pipe to form elbows and tees or other similar type construction will not be

permitted. Weld defects shall be removed and repairs made to the weld, or the weld joints shall be entirely removed and rewelded at no additional cost to the Government. After filler metal has been removed from its original package, it shall be protected or stored so that its characteristics or welding properties are not affected. Electrodes that have been wetted or that have lost any of their coating shall not be used.

3. Identification Systems. Identification tags made of brass, engraved laminated plastic, or engraved anodized aluminum, indicating service and pipe size shall be installed at both ends of the pipe. This includes both sleeves and pressure service applications. Tags shall be 1-3/8 inch minimum diameter and marking shall be stamped or engraved. Tags shall be securely attached to pipes or caps with No. 12 AWG, copper wire, chrome-plated beaded chain, or plastic straps designed for that purpose.

4. Flushing. After installation and construction are completed, all piping including sleeves, shall be flushed. In general, sufficient water shall be used to produce a minimum water velocity of 2.5 feet per second through piping being flushed. Flushing shall be continued until discharge water shows no discoloration, dirt, or debris. Piping shall be drained at low points or pumped dry.

E. Acceptance Testing. Where any section of a water line is provided with concrete thrust blocking for fitting or hydrants, the hydrostatic tests shall not be made until at least 5 days after installation of the concrete thrust blocking, unless otherwise approved.

(1) Pressure Test. After the pipe is laid, the joints completed, and the trench partially backfilled leaving the joints exposed for examination, the newly laid piping or any valved section of piping shall, unless otherwise specified, be subjected for 1 hour to a hydrostatic pressure test of 150 psi. Exposed pipe, joints, fittings, and valves shall be carefully examined during the partially open trench test. Joints showing visible leakage shall be replaced or remade as necessary. Cracked or defective pipe, joints, fittings, and valves, discovered in consequence of this pressure test shall be removed and replaced with sound material, and the test shall be repeated until the test results are satisfactory. The requirement for the joints to remain exposed for the

hydrostatic tests may be waived by the Engineer when one or more of the following conditions is encountered:

(a) Unstable soil conditions in the trench.

(b) Compliance would require maintaining barricades and walkways around and across an open trench in a heavily used area that would require continuous surveillance to assure safe conditions.

(c) Maintaining the trench in an open condition would delay completion of the contract.

(2) The Contractor may request a waiver, setting forth in writing the reasons for the request and stating the alternative procedure proposed to comply with the required hydrostatic tests. Backfill placed prior to the tests shall be placed in accordance with the requirements of this section.

(3) Leakage Test. Leakage test shall be conducted after the pressure tests have been satisfactorily completed. The duration of each leakage test shall be at least 2 hours, and during the test the water line shall be subjected to not less than 150 psi pressure. Leakage is defined as the quantity of water to be supplied into the newly laid pipe, or any valved or approved section thereof, necessary to maintain pressure within 5 psi of the specified leakage test pressure after the pipe has been filled with water and the air expelled. No piping installation will be accepted if leakage exceeds the allowable leakage which is determined by the following formula:

$$L = 0.0001351 \cdot N \cdot D \cdot (P^{1/2})$$

L = Allowable leakage in gallons per hour
N = Number of joints in the length of pipeline tested
D = Nominal diameter of the pipe in inches
P = Average test pressure during the leakage test, in psi gauge

(4) Should any test of pipe disclose leakage greater than that calculated by

the above formula, the defective joints shall be located and repaired until the leakage is within the specified allowance, without additional cost to the Government.

(5) Time for Making Test. Except for joint material setting or where concrete thrust blocks necessitate a 5-day delay, pipelines jointed with rubber gaskets, mechanical or push-on joints, or couplings may be subjected to hydrostatic pressure, inspected, and tested for leakage at any time after partial completion of backfill. Cement-mortar lined pipe may be filled with water as recommended by the manufacturer before being subjected to the pressure test and subsequent leakage test.

(6) Concurrent Hydrostatic Tests. The Contractor may elect to conduct the pressure and leakage tests concurrently. Regardless of the sequence of tests employed, the results of pressure tests and leakage tests shall be as specified. All replacement, repair or retesting required shall be accomplished by the Contractor at no additional cost to the Government.

F. MEASUREMENT:

Measurement of recirculation pipe shall be made on the basis of the actual length of recirculation pipe installed, in accordance with the drawings.

G. PAYMENT:

Unless otherwise specified, payment for recirculation pipe will be made at the respective contract price per linear foot. The price shall include the cost of all labor, materials, equipment and tools required to furnish materials and complete the installation of the pipe (including fittings, check valves, gate valves, vacuum and air relief valves, valve boxes, joint materials, pipe, thrust blocking and anchors).

Item	Unit
Recirculation System	Lump Sum.

DIVISION 16 - ELECTRICAL

Section No.	Title
16000	Traffic Intersection Signal Work
16001	Traffic Signals
16070A	Seismic Protection for Electrical Equipment
16375	Electrical Distribution System, Underground

16000 TRAFFIC INTERSECTION SIGNAL WORK

A. GENERAL:

1. Scope: This section covers signalized intersection work.

2. The codes for work on traffic signal shall be as specified in SECTION: TRAFFIC SIGNAL, CITY OF KANSAS CITY, MISSOURI TRANSPORTATION DEPARTMENT, TRAFFIC SIGNAL SPECIFICATION TSS-500 A. Note that all references to "Engineer" OR "City Engineer" guidance shall be interpreted as "Contracting Officer" for this contract.

3. Measurement and Computation of Quantities shall include all items required for removal, modification and construction of new equipment to meet the requirement in the drawings and specifications.

7. Bidding Schedule Items for work covered in this section are as follows :

Item	Unit
"Traffic Intersection Signal Work"	lump sum

* * * * * * * * * * * * *

SECTION 16001 TRAFFIC SIGNAL

CITY OF KANSAS CITY, MISSOURI TRANSPORTATION DEPARTMENT
March 1989
TRAFFIC SIGNAL SPECIFICATION TSS-500 A

NOTE: Changes from April, 1998 specifications are indicated by a vertical line in the margin. Editing changes which do not represent a change in intent have not been marked.

SECTION 1. DESCRIPTION.

The work shall consist of furnishing and installing traffic signal equipment and materials as shown in the contract and as specified on accompanying construction drawings (Plans).

SECTION 2. GENERAL.

(a) Existing traffic signal equipment shall remain in operation, except for short shut-down periods to allow for alterations or removals as described in the contract, and as specified in the Plans. The Contractor shall notify the Kansas City, Missouri Transportation Department well in advance of temporary shut-down of all or part of an existing traffic signal installation. Extended shut-down of exi ' sting signal equipment during construction of the new installation will not be permitted unless specifically noted in the Plans.

(b) All traffic signal equipment, materials, and construction methods relating thereto, shall conform to this Specification. References to certain sections of Missouri Standard Specifications for Highway Construction, 1999, as Amended are made herein. Said publication may be purchased from the Missouri Highway Commission, Jefferson City, Missouri. References to other standards and specifications are also made. Abbreviations for the various references are defined as follows: AASHTO - American Association of State Highway and Transportation Officials ANSI - American National Standards Institute ASTM - American Society for Testing and Materials ITE - Institute of Transportation Engineers MS - Military Standard MCIB - Midwest Concrete Industry NEMA – National Electrical Manufacturer's Association UL - Underwriters Laboratories ISMA - International Municipal Signal Association

2.1 TEMPORARY TRAFFIC SIGNALS.

Transition from existing signal control to the new permanent traffic signal installation may require interim temporary traffic signals. When so specified, temporary traffic signals shall be installed according to the Plans and as specified in the Contract. Temporary traffic signal equipment furnished by the Contractor shall become the property of the City of Kansas City after removal, unless otherwise noted in the special provisions section of the Contract.

SECTION 3. MATERIALS

All materials shall conform to Division 1000, Materials Details, Missouri Standard Specifications, 1977, as Amended to ASTM Specification as follows:

ITEM	MISSOURI STANDARD DIVISION_
Reinforcing Steel for Concrete	1036
Wood Poles	1050
Electrical Conduit	1060
	ASTM SPECIFICATION
Galvanizing of Posts and Appurtenances	A123/A123M-00
Galvanizing of Bolts, Nuts and Washers	A153/A153M-00
Stainless Steel Bolts, Screws and Washers	A193/A193M-00
Stainless Steel Nuts	A194/A194M-00
Low Alloy Steel	A-441-75
High Strength Bolts and Nuts	A325/A325M-00 or A449-00

Anchor bolts shall have a minimum yield strength of 55,000 pounds per square inch and a minimum elongation in 2 inches of 14. 0 percent. Nuts for anchor bolts shall conform to ASTM A-563-75, Grades C, D, or DH; or ASTM A194/AI94M-00, Grades 2 or 2H. The Contractor shall furnish a certified mill test report showing chemical composition and physical test results on the anchor bolts and nuts or high strength bolts and nuts. Bolts and nuts specified to meet ASTM A-307-00 shall be accompanied by a manufacturer's statement that the material was manufactured per ASTM A-307-00.

3.1 CONCRETE

Materials, placement, finishing, slump and transportation of portland cement concrete shall be in accordance with Sections S01 and 703, Missouri Standard Specifications for Highway Construction, 1999 as Amended.
(a) Concrete for traffic signal structures shall be Midwest Concrete Industry, air-entrained, MCIB Mix Number A 629-1/2-2.
(b) Concrete for curb and sidewalks shall be the mix as specified by the City Engineer for such construction effective on the date of award of the Contract.

3.2 CONDUCTOR CABLE AND WIRE

Wire and cable shall conform to International Municipal Signal Association specifications, as referenced, and shall be plainly marked on the outside of the sheath with the manufacturer's name and identification of cable type. Each type of gauge of conductor cable shall be accompanied by manufacturers certificate in triplicate that the conductor cable meets the following requirements:

(a) Multi-conductor switching and interconnection cable shall be soft or annealed, stranded, copper wire, tinned or untilled,
meeting the requirements of IMSA Specification Number 20-1, 1984.

(b) Power cable shall be single conductor, stranded wire meeting the requirements of IMSA Specification 20-1, 1984 and be Type USE.

(c) Detector loop lead-in cable shall be Number 14 AWG, soft drawn, Stranded copper wire meeting the requirements of IMSA Specification Number 50-2, 1984 cable and shall be installed at a minimum depth for 18 inches below ground level by approved direct burial method or in conduit as shown on the plans.

(d) Paired communication cable shall be Number 16 AWG polyethylene-insulated, polyethylene jacketed with electrical shielding meeting the requirements of IMSA Specification Number 20-2.

(e) Loop detector wire shall be Number 14 AWG, 19 strand copper wire meeting the requirements of IMSA Specification Number 51-5 and shall be installed as shown on sheet TCD-0-4 of the Standard Details.

3.3 PULL BOXES AND COVERS

The contractor shall furnish a manufacturers certification in triplicate showing typical rest results representative of the materials used in manufacture of pull boxes and covers, and certifying that the material supplied conforms to all specified requirements. Pull box covers and rings to be installed in the street shall have machined bearing surfaces. The Boxes shall be installed as shown.

3.3.4 JUNCTION BOXES

Junction boxes shall be flanged, 12 x 12 x 4 inches, or 14 x 12 x 5 inches in size, designed for flush mounting. They shall be cast iron, hot-dip galvanized inside and out or case aluminum. They shall be drilled and tapped for all conduit connections with a minimum of five full threads for conduit entrances. The cover shall be made watertight with suitable gasket, secured with stainless steel or cadmium plated screws or bolts.

3.4 LOOP SLOT SEALANT

Sealant for detector loops shall be one of the following types, mixed and applied according to manufacturers instructions.

Preco Gold Label Flex	Below 40 degrees	F
3M Sealant	Above 40 degrees	F
Preco Gold Bond		

SECTION 4. EQUIPMENT

All equipment shall be new stock unless the Contract provides for relocation of existing equipment or use of equipment furnished by others. Equipment shall be the products of reputable manufacturers,

shall conform to stated requirements and meet the approval of the Engineer.

4.1 SIGNAL HEADS

Each signal head of one or more signal faces shall be of the conventional type, or when designated on the plans, of the optically limiting type. All signal heads shall be weatherproof and meeting the following requirements:

(a) Color of all signal heads shall be in accordance with Section 6 of the specification.

(b) Lamps f or all traffic signal heads shall be furnished and installed by the Contractor.

(c) Each signal face shall be furnished with a terminal block with circuit capacity as required, but not less than five (5) terminals. If single sections are specified, each section shall be furnished with required terminal block. All terminal blocks shall be rigidly secured to the section housing.

(d) Visors shall be supplied for each signal head; conventional vehicle heads with tunnel visors, optically limiting heads with cut-a-way visors and pedestrian signal heads with cut-a-way visors; unless otherwise specified.

(e) The position of each signal head shall be as specified on the Plans.

4.1.1 CONVENTIONAL SIGNAL HEADS

The signal section shall be self-contained assembly consisting of an optical unit, section housing, housing door, terminal block and the necessary gaskets to insure a weatherproof unit. it shall be capable of separate mounting or inclusion in a signal face containing two or more signal sections. All material used in construction of this type signal head (pedestrian and vehicle types) shall be of ultraviolet stabilized color-impregnated polycarbonate resin. The design of the housing shall be such that with the aid of simple tools and the addition of standard parts, it shall be possible to make any assembly consisting of one or more signal sections and, with the addition of standard bracket assemblies, assemble signal faces into multi-way traffic signal head configurations. Conventional, polycarbonate signal head sections shall meet the following requirements:

(a) The housing of each section shall be one piece with sides, back, top and bottom integrally molded. It shall have a minimum 0.09 inch thickness and shall be ribbed to produce added strength. Internal bosses or inserts shall be provided in each housing for mounting a terminal block and attachment of backplates. The top and bottom exterior of the housing shall be flat to insure perfect

alignment of assembled sections. The top and bottom of the housing shall have a nominal 2-inch diameter opening with 72 molded serrations around each opening to insure positive lock of the sections and pipe bracket and capable of being directed at any angle in the horizontal plane in 5-degree increments.

(1) Housing shall be rigidly fastened together by a three bolt assembly or by other connectors approved by the Engineer. Positive locked positioning shall be provided when this type signal is used with serrated brackets, post top, mast arm, or span wire fittings. If required, nominal 0.10 inch aluminum plates shall be furnished and installed inside and outside the section housing at all points of attachment of pipe bracket.

(2) The housing door of each signal section shall be one piece and hinged to the housing. when closed, the door shall be secured to the housing with two stainless steel wing screws. Each door shall have provisions for attachment of a cut-a-way or tunnel visor.

(b) The optical unit shall consist of a lens, reflector, lamp receptacle, wiring, and necessary gaskets to insure a weather-tight unit and shall be designed in conjunction with the visor to eliminate the return of outside rays entering the unit from above the horizontal.

(1) Lenses shall be made of a polycarbonate material and meet the requirements of ANSI D10.1-1996 and of current ITE specifications and standards. Arrow indications on lens may be formed as an integral part. Reflective paint masks or aluminum metal masks shall not be used to form the arrow on the lens. The lens and the reflector; in conjunction with a molded gasket and lamp receptacle, shall form a sealed unit.

(2) Reflectors shall be made of high purity spun aluminum to shape and treated by the Alzak process or of a one-piece polycarbonate design having an aluminum reflective surface. Reflectors shall conform to requirements of ANSI D10.1-1966 and with applicable ITE standards and specifications.

(3) The lamp receptacle shall be designed so that it will be impossible for the lamp to loosen due to vibration. The receptacle shall be of heat resisting material designed to hold normal base 67-69, 116, 150-165 watt traffic signal lamps, as specified and at specified focal lengths of respective reflectors. The lamp receptacle shall be of the fixed focus type and shall rotate about its axis in order to position the opening of the lamp filament

without the use of tools. A lamp receptacle retainer shall be provided which can be installed or removed without the use of tools. Wiring for each lamp receptacle shall be provided by color-coded Number 18 AWG insulated stranded copper wire with sufficient length to extend, without splicing, to the terminal block with the reflector and holder in the fully open position.

(4) Lamps for conventional signal heads shall be furnished and installed by the Contractor. Heavy duty standard base, clear bulbs having a rating of 8,000 hours at 130 volts, shall be provided. Lamps for 12" round signal sections shall have a light center length of three inches and be 150 to 165 watts with initial lumen output of 1745 to 1950. Lamps for 121, pedestrian signal heads shall have a light center length of 2 -7/16 inches and be 116 watts with initial lumen output of 1275. Lamps for 9" pedestrian signal heads shall have a light center length of 2 -7/16 inches and be 67 to 69 watts with initial lumen output of 610 to 675. Lamps are to be mounted in respective receptacles, horizontally with the open segment of the filament up.

4.1.2 PEDESTRIAN SIGNAL HEADS

Applicable portions of Section 4.1 and 4.1.1 shall apply to pedestrian signal heads. Pedestrian signals shall be furnished in nominal 9 inch or 12 inch rectangular design as specified on the Plans. The 11DONT WALK" and "WALK" signal sections shall be contained in separate housings unless otherwise specified. The "DONT WALK: indication shall be mounted directly above the "WALK" indication. The illuminated words shall be uniform upper case letters: "WALK", lunar white in color and 11DONT WALK" portland orange in color. Minimum letter heights shall be three inches for 9 inch sections, and 5 inches for 12 inch sections. Minimum legibility distances, when illuminated shall be 60 feet for 9 inch sections and 150 feet for 12 inch sections.

4.1.3 OPTICALLY LIMITING SIGNAL HEADS

The signal section shall be a self-contained assembly consisting of an optical unit, section housing, housing door, terminal block, and necessary gaskets to insure a weather-proof unit. it shall be capable of separate mounting of inclusion in a signal face containing two or more signal sections. If existing housings are to be combined with new housings, the new housings shall be adaptable to the existing. All new signal sections shall meet the following requirements:
(a) Each signal housing shall be die cast aluminum having a

chromate preparatory treatment. The signal housing and lens holder shall be sealed with weather resistant gaskets. Hinge and latch pins shall be corrosion resistant metal. The lens holder and interior of the housing shall be optical black. The housing shall mount to standard 1 2 inch fittings as a single section, as a multiple section face, or in combination with conventional signals. The signal housing shall be provided with an adjustable connection that permits incremental tilting from zero to 10 degrees above or below the horizontal while maintaining a common vertical axis through the mounting assembly. Housing connection shall permit external adjustment about the mounting axis in 5 degree increments. Attachments such as visors, backplates or adapters shall readily fasten to mounting surfaces without affecting weatherproof characteristics and light integrity of the signal.

(b) The optical system shall consist of an objective lens, optical limiter diffuser, lamp, lamp fixture and optical masking tape.

(1) The objective lens shall be a high resolution planar incremental lens, hermetically sealed within a flat laminant of weather resistant acrylic or approved equivalent. The lens shall be symmetrical in outline, and, if rotated to any 90 degree orientation about the optical axis, shall not displace the primary image.

(2) The optical limiter-diffuser shall provide an accessible imaging surface at focus on the optical axis for objects up to 1200 feet distant, and permit an effective veiling mask to be applied as determined by the desired visibility zone. The optical limiter-diffuser shall be provided with positive portioning and composed of heat resistant glass.

(3) The lamp fixture shall consist of a separately accessible housing and integral lamp support, adjustable ceramic socket, and self-aligning quick release lamp retainer. Electrical connection between section housing and lamp housing shall be accomplished with an interlock assembly which disconnects the lamp holder when the door is opened.

(4) A signal lamp intensity control shall be supplied in each signal section to provide dimming of the signal lamp as the ambient light intensity drops below approximately 3 foot -candles.

(5) Each signal section shall be installed and directed, and the optical limiter masked, in accordance with manufacturers instructions to provide indications in accordance with the plans.

(6) Lamps for optically limiting heads shall be frosted three prong plug, sealed beam, flood light type with an average

rated life of at least 6,000 hours. The lamps shall be furnished and installed by the Contractor and be attached to the diffusing element with a collar having specular inner surface. Lamps f or 121, heads shall be 150 watts with an initial lumen output of 1600. Lamps for 81, heads shall be 75 watts with an initial lumen output of 670.

4.1.4 SIGNAL VISORS

(a) Standard cut-a-way visors shall be made from polycarbonate material not less than 0.090 inch thick. Visors shall fit tightly against the door and not permit any perceptible filtration of light between them and the housing door. Lengths of cut-a-way visors provided on pedestrian signal heads an on optically limiting heads shall be equal to the nominal lens size for each respective signal section. Visors shall angle downward from horizontal not less than three, nor more than seven and onehalf degrees and shall be held in place on the housing door by four fastening screws or bolts, by four wedge-pressure connector lugs or by other methods approved by the Engineer.

(b) Standard tunnel visors shall be of the same material and thickness, be within the downward tilt range of standard cuta-way visors, and conform to other requirements in (a) above. Nominal lengths of tunnel visors shall be 8 inches for eight-inch diameter signal units and 12 inches for twelve-inch diameter signal units.

(c) Color of visors shall be as specified in Section 6.
4.4.5 SIGNAL HARDWARE

(a) All sidemount brackets for single vehicle heads, or a vehicle -pedestrian head combination, shall be of polycarbonate material.

(b) All other pipe, nipples, elbows and tees may be of polycarbonate, aluminum, or steel, 1 2 inch pipe size. Elbows, tees and crosses shall be threaded and shall provide rigid unit mounting at each connection. Fittings which attach to the signal head section shall incorporate matching serrations or, by use of an adapter ring, be compatible with the serrations on the housing. Fittings shall be secured to the signal housing, on the interior side, by a threaded nipple and hex nut. Hardware f or the post mounting of more than one signal head shall include an external terminal compartment as shown on the Plans.

(c) Color of hardware shall be as specified in Section 6.

4.2 SIGNS

Signs for signal installation will be furnished by the Transportation Department and installed by the contractor unless otherwise noted on the Plans.

4.3 POST, POLES AND MAST ARMS

All traffic signal and street light supports shall meet or exceed the "Standard Specifications for Structural Supports for Highway Signs, Luminaire and Traffic Signals, 1985" and its latest revisions published by the American Association of State Highway and Transportation Officials (AASHTO).

4.3.1 STEEL PEDESTAL POSTS

Steel pedestal posts shall be 4 1/2 inch outside diameter standard weight steel pipe. The base shall be of cast iron, free from imperfection, and provided with a suitable door for wiring access. A grounding lug shall be as shown on the Plans. Steel pedestal posts shall be galvanized in accordance with Section 6 of this Specification.

4.3.2 ALUMINUM PEDESTAL POSTS

(a) Aluminum pedestal posts shall be straight tubing of 6063-T6 aluminum alloy conforming to the requirements of ASTM B 210-00 with a 4 1/2 inch outside diameter and a nominal wall thickness of 0.125 inch. The pedestal base casting shall be either permanent mold casting of alloy 356-0-F conforming to the requirements of ASTM B 108-00, or sand castings of alloy 356-0-F, conforming to the requirements of ASTM B26/B26M-99. The base shall be free from imperfections and provided with a suitable door for wiring access. The base and post shall be joined either by threaded or leaded connection. Welded connections will not be accepted. A grounding lug shall be provided inside the base. All hardware shall be no ferrous metal or stainless steel.

(b) Street Scape Aluminum Pedestal Post - When specified the following additional conditions must be met: the requirement for an access door in the pedestal base shall be replaced with a peripherally reinforced flush covered 3" x 5" hand hole centered 18" above the bottom of the post. The post shall have a S" outside diameter and have a 9 1/2 bolt circle. Square collars shall be provided to cover the base and shall consist of spun 6063 alloy aluminum. A vibration dampener shall be provided. The external finish shall conform with Section 6 of this Specification.

4.3.3 STEEL MAST POSTS AND ARMS

Traffic signal mast arm posts, combination street light and signal mast arm posts, signal mast arms and street light mast arms, shall be of the type and style as specified on the plan sheets.

(a) Anchorage of the post assemblies shall consist of four, high strength anchor rods positioned and designed to resist weight and wind loads imposed on the post shaft and mast arms. The top 4 1/2 inches of each of the anchor rods shall be threaded to accept hexagon nuts. The top 12 inches of each anchor rod shall be galvanized. The bottom four inches of each rod shall be bent 90 degrees to the balance of the rod for proper anchorage. Two hex nuts, one for leveling and one for anchorage shall be provided and installed on each anchor rod.

(b) Traffic signal heads shall be mounted vertically and rigidly to the mast arms utilizing support devices and hardware as specified on the Plan sheet. Head support brackets type A & 3 shall be aluminum or zinc plated steel.

(c) Wire entrances shall be provided on mast arms, one per signal head, as described on the Plan sheet. All wire entrances shall be 1 1/2 inch pipe couplings and be provided with end plugs.

(d) A grounding lug or connector shall be located inside the base of the mast arm post at the hand hole for attachment of No. 6 ground wire.

(e) The mounting heights of mast arm traffic signal heads shall be as follows:
The bottom of the housing of a signal face shall not be less than 16 feet nor more than 19 feet above the grade at the center of the roadway. Multiple signal heads mounted on a common mast arm shall be horizontally spaced as shown on the Plan sheet and the tops of the signal face housing shall be mounted in a horizontal plane.

(f) Steel mast posts and arms shall be galvanized in accordance with Section 6. of this Specification.

4.3.4 ALUMINUM POSTS AND MAST ARMS

Aluminum posts and mast arms shall conform to applicable standards in Section 4.3 and shall be manufactured in accordance with industry practices. Aluminum posts and mast arms shall be one piece continuously tapered seamless hollow shafts. The shaft shall be manufactured by the spun drawn method from seamless, extruded aluminum alloy tubing, ASTM B221-00, Alloy 6063-T6, and shall have a nominal wall thickness of 0.250 inch. A cast aluminum base shall be attached to the shaft by a continuous weld on both the inside and outside of the shaft. Each shaft shall have a polished satin brush finish. Fabrication and handling shall be performed in a manner to prevent scoring or marring of the surfaces. A hand hole equipped with a suitable aluminum cover shall be provided in the post near the base. A grounding lug or connector shall be

provided inside the post near the hand hole. A removable aluminum cap shall be provided on the top of the post and small end of the mast arm. All anchor bolt nuts shall be completely covered. All hardware shall be nonferrous metal or stainless steel.

4.3.5 SPAN WIRE ASSEMBLIES

Span wire assemblies shall include 3/8 inch steel messenger wire, all bolts, nuts, washers, clamps, cable straps, and other appurtenances shown on the plans or necessary for proper installation. Messenger wire shall be Class A galvanized, high strength grade 7 wire strand conforming to the requirements of ASTM A 475-98. Clamps shall be fabricated from low alloy steel. Steel posts for span wire assemblies shall have wire inlets and cable guides with 1 1/2 inch rain tight insulator bushings, and other features specified in the contract. Wood poles for span wire installations shall be as specified on the Plans.

4.3.6 CONDUIT

Polyvinyl chloride, Schedule 40, UL approved pipe, inside diameter as specified in the Plans, shall be used for the conduit system. Substitution of metallic pipe or pipe of other materials will not be permitted.

4.4 TRAFFIC SIGNAL CONTROLLERS

Traffic controllers are defined as the complete assembly of all required equipment and components for control of traffic signal indications. Each controller and its associated equipment shall be designed to operate on 115 volts, 60 Hz, single phase, alternating current. Variations in the voltage of the power supply of plus or minus 10 percent, or sustained temperatures inside the cabinet between -200 F and 1650 F shall not change the total time cycle of pre-timed controllers, or the length of any interval, portion, period, or unit extension of actuated controllers by more than 5 percent, or cause electrical or mechanical damage. Heater elements shall not be used to attain compliance with these requirements. vibration shall not affect normal operation.

4.4.1 MICROCOMPUTER 170 CONTROLLER

The microcomputer 170 Controller shall conform except for modifications contained in this section of the Specification, to the joint New York/California Type 170 Microcomputer Specifications as published by the U.S. Department of Transportation, Federal Highway Administration FHWA-IP-78-16, December, 1978, which is herein incorporated by reference and forms a part of this

Specification. A copy of the Type 170 microcomputer Specifications may be supplied by the City of the request of the Contractor.

4.4.1.1 Functional Requirements

The functional descriptions in the subsection are provided for information purposes only.

Each Type 170 shall provide the following functional capabilities.

(a) Command signal light status to effect coordinated control of from 1 to 8 vehicle movements and from 1 to 4 pedestrian movements.

(b) Monitor signal light status and collect surveillance detector data (count and occupancy) f rom up to 12 vehicle detectors.

(c) Provide the capability of implementing commands received from local front panel.

(d) Respond to up to 16-vehicle and pedestrian actuation detectors.

(e) Be capable of functioning as an isolated traffic signal controller.

(1) Signal Control

The Type 170 will provide the capability to perform the following signal control functions:

X Control signal displays (red, yellow and green) to effect control of from 1 to 8 vehicle movements.

X Control signal displays (WALK and DONT WALK) to effect the control of from 1 to 4 pedestrian movements and to coordinate the pedestrian movements with the vehicle movements.

X Flash the red, yellow and DONT WALK signal displays at a nominal rate of 50 to 60 flashes per minute with approximately a 50 percent dwell time.

X Control the sequencing and timing of signal displays based on interval time durations, predefined sequencing criteria, detector actuation inputs, pedestrian push button inputs and/or command data inputs.

X Emulate traffic controller sequencing and timing functionally equivalent to generally available 2phase through 8-phase el ectro -mechanical and solid state traffic controllers, both semi and fully actuated and non-actuated in any or all phases.

X Timing of signal display intervals to a resolution of 1/10 second.

(2) Detector Processing

The Type 170 will provide the capability to selectively perform any or all of the following detector processing functions for up to 16-vehicle surveillance detectors and up to 16-vehicle and pedestrian actuation detectors:

x Measure detector "on time" (vehicle presence durations) for vehicles within the field of a presence detector to a resolution of at least one-thirtieth of 1-second, from the output of a presence detector.

x Accumulate vehicle count date from the output of either presence of pulse detectors.

x Compute raw volume, speed and occupancy.

x Set latching indicators and currently actuated indicators for detector actuations.

(3) Command Implementation

The Type 170 will provide the capability to accept and implement commands through the front panel. The following is a representative command list:

X Stop and start timing, step, yield, force-off, place "XII phase call

X Interval Time durations

X Alter sequence

X Clock synchronization

X Internal flash on/off

X Special functions on/off (up to four auxiliary devices)

X Update contents of RAM

X Read contents of RAM

(4) Higher Order Control Functions

The Type 170 will include the following higher order control function:

X Time-of-day pattern selection based on time-of-day, day of week, week of year, etc. The capability to store and select from at least five timing patterns shall be provided for.

4.4.1.2 MODIFICATION TO TYPE 170 SPECIFICATIONS

PAGE	SECTION	MODIFICATION
General	-	"State" or "Agency" shall be replaced by Kansas City, Missouri Transportation Department throughout the Specification.
1-5	3	The Contractor shall supply three (3) manuals.
1-23	6.1	Replace the first sentence with the following: The contractor shall supply with each item to the Transportation Department a full test report conducted on each test.
2-2	1.1	A socket shall be provided for the MPU such that the MPU shall be readily removed and replaced without damage.
4-3	1.6	Replace with the following: Detector tuning shall be automatic including instant automatic recovery from intermittent opens and/or multiple shorts plus power failure and achieve normal operation and at least 90 percent of its selected sensitivity within 10 seconds after application of power.

4-3 1.7 Replace with the following:
The detectors shall comply with all performance requirements herein specified when connected to an inductance (loop plus lead-in) of from 20 to 2000 microhencies with a Q-parameter as low as 5 at the detector operating frequency.

4.4 - Add the following Section 1.12
The detector unit shall function normally if at a single point there is a loop leakage or a short to ground.

4.4 - Add the following Section 1.13
The detector unit shall function normally under heavy traffic conditions in which a long loop does not become unoccupied for any instant during an extended period of peak flow.

4.4 Add the following Section 4.14
Each detector unit shall sequentially scan (excite and measure) its channel inputs to eliminate crosswalk (mutual interference/coupling) between closely spaced large loops in adjacent lanes and/or Lead-Ins in common saw-cuts and/or homeruns in common conduits.

4.4 Add the following Section 4.15
Each channel shall provide a continuous, non resettable (fail-safe) output and indication in response to an open loop/open lead-in system. The open loop indication and output shall not be resettable as long as the open exists, except then they shall be defeated when the channel "Off" position is selected.

4.4 Add the following Section 4.16
Each detector unit shall be provided with a loop test switch position to verify loop system integrity. In the "Open Loop Test" position a previous fault shall be indicated via the channel indicator. The memory shall remain intact and can be queried repeatedly, while continuing to process and output valid detections. The memory shall only be cleared by power interruption as by or removing and reinserting the DC powered plug-in units.

4.4 Add the following Section 4.17
Each unit shall be provided with apanelmounted frequency switch as an additional aid to crosswalk control between detector units.

4-5 Add the following Section 4.1.3
Each detector channel shall respond while connected to a single 61 x 100' quadrapole loop with a maximum lead-in of 1000 feet.

4.5 Add the following Section 4.4
Detector units shall include 8 sensitivity settings in 2:1 steps over a range of 128:1 to enable selection of the proper sensitivity (threshold) to achieve detection of all licensable motor vehicles over multiple turn loops in asphalt or reinforced concrete pavements and/or multiple loops which may be connected in series, parallel or series/parallel with lead- in /homeruns to over 1000’.

11-2, 11-3 3 Eliminate Section 3 entirely

4.4.1.3 ADDITIONS

1. Each controller unit shall include as part of the unit a 412B PROM board with microprocessor chips that include the WAPITI Micro Systems corporation W41KS unless otherwise stated. Licensure of the program shall be included and made part of the controller unit.

2. A second set of internal controller unit pc boards, a power supply and a diagnostic PROM shall be included with every group of five units of a particular brand, make and/or model.

3. Each controller cabinet shall have a shelf mounting in the back of the cabinet to be either attached to the cabinet or to the rack which will hold a 12 x 12 x 6 modem and up to 10 pounds of weight.

4. Each 332 and 336S style cabinet shall have a rack mounted plan drawer with lid suitable for storing plans and supporting 20 pounds of weight.

5. Cabinet types 336 and 336S shall be provided with a Type "M" base adapter.

4.5 DETECTORS

4.5.1 INDUCTION LOOP DETECTORS

Induction loop vehicle detectors shall detect a vehicle stopped within the field of the loop or passing over it at speeds to 80 miles per hour. All controls, connections and indications shall

control shall be provided to select pulse of full presence operation. In the pulse mode, a single vehicle entering the loop shall cause an output of one second or less. In the presence mode, the detector shall indicate the presence of a vehicle stopped in the detection area until the detector times out. The detector, after installation and initial adjustment, shall automatically tune itself to various loop configurations ranging in size from 6 feet by 6 feet minimum to 6 feet by 100 feet maximum, with a maximum lead-in length 750 feet. The detector shall time out and retune itself automatically if it senses a continuous vehicle occupation of the loop field for a nominal time of 10 to 30 minutes. In the event of power loss to the detector, a continuous call shall be made to the controller. The sensing unit shall have a light which shall illuminate when a vehicle is within the loop field.

4.5.2 MICROLOOP PROBE

The device shall transform an increase in magnetic field intensity into a decrease in inductance. The device shall be a small cylindrical unit designed to be buried beneath the road surface. When the device is connected to an inductive loop detector, all vehicles containing significant vertical sections of ferromagnetic material shall be detected. The unit assembly shall be sealed against moisture entry and shall have a temperature range of -35° to +165° F. The unit shall have a humidity range of 0% to 100% including submersion in solutions of chemical typical of roadway runoff. AC magnetic field intensity must be less than 10 millioerstads peak-to-peak divided by the number of probes connected in series. The unit shall operate normally in ambient magnetic field intensity of 100 to 600 millioerstads. The inductance shall be 25 microhenries nominal per probe plus 21 microhenries nominal per 100 feet of interconnecting and lead-in cable. The resistance shall be 0.5 ohms per probe plus 3.2 ohms per 100 feet of interconnecting and lead-in cable. Q shall be nominally 3 at 40 KHz, 400 millioerstads ambient magnetic field intensity, nominally 5 at 100 KHz, 400 millioerstads magnetic field intensity. The sensitivity shall be 3.5 to 8.0 nanohenries per millioerstad at 40 KHz, 400 millioerstad ambient magnetic field intensity.

4.5.3 MAGNETOMETER DETECTORS

Detectors of this type shall meet the performance requirements set forth in Section 4.5.1 for Induction Loop Detectors and their sensing units shall meet the requirements set forth in that Section, including quick disconnectors, connecting cable and pin configuration.

4.5.4 PEDESTRIAN PUSH BUTTON

Pedestrian push buttons shall be direct push contact type. Each push button shall be a removable contact assembly mounted in a durable metal case. Contacts shall be normally open, entirely insulated from the case and operating button, and have connecting terminals. The case shall have

one outlet tapped for 2 inch pipe. The operating button shall be brass or other corrosion resistant metal alloy and shall be sturdy. The operating volt-

age shall not exceed 18 volts. The entire assembly shall be weatherproof, secure against electrical shock to the user, and of such construction as to withstand hard usage and meet ADA requirements.

4.6 LIGHTNING AND SURGE PROTECTION FOR THE TYPE 170 CONTROLLER

A. Power line surge protection may be any of the following' devices:

1. FED 201
2. FED 300-10
3. Islatrol
4. SHP 300-10

SECTION 5 CONSTRUCTION REQUIREMENTS

5.1.1 INSTALLATION OF PULL BOXES AND JUNCTION BOXES

As shown on TCD-0-3.

5.1.1 JUNCTION BOXES
Junction boxes shall be installed at locations shown on the Plans. A junction box placed in a sodded area or shoulder shall have a concrete pad 12 inches wide and 4 inches deep around the perimeter. Concrete for the pad shall be Midwest Concrete Industry Standard, Air Entrained, MCIB Mix 629-1/2-2. Cast aluminum junction boxes shall be separated from concrete by 1/8 inch thick insulation pads meeting requirements of Section 1038, Missouri Standard Specifications for Highway Construction, 1999, as amended.

5.2 CONCRETE BASES
Concrete bases for posts shall conform to dimensions shown on the Plans. Excavation for bases shall be made in a neat and workmanlike manner. The top of the controller base shall be at least 4 inches above the final ground elevation. A concrete apron shall be constructed at the controller base as shown on the Plans. Aprons shall be considered part of the controller base. The top 12 inches of flush type bases shall be formed. Forms shall be sufficiently rigid to prevent warping or deflection. Forms shall be level, and shall be held rigidly in place while concrete is being placed. Concrete shall be Midwest Concrete Industry Standard, Air Entrained, MCIB Mix Number A629-1/2-2. Conduit, ground rods, and anchor bolts shall be held rigidly in place before and during concrete placement. Conduit shall extend above all bases a nominal 4 inches for attachment of grounding clamp. A 3/4 inch copper clad ground rod shall be placed in each concrete base, extending through the base into the ground as shown on the Plans. Tops of all bases shall be finished level and edged to a radius of 2 inch. Exposed surfaces of bases shall be finished in a workmanlike manner as soon as practicable after removing forms. All conduit openings in the controller cabinet or

controller cabinet base shall be sealed with an approved sealing compound after wiring -is completed. The compound shall be readily workable soft plastic.

5.3 TYPE CS AND BS HELIX CORE BASES

Helix core type bases, as shown on the Plans, may be used as alternates for pedestal or mast arm pole foundations where conditions permit, only with the approval of the Engineer. The screw anchor bases shall be installed per industry practices and shall be of steel material conforming to specifications shown on the Plans. High strength bolts conforming to Section 2.1 shall be used for pole anchorage and shall be Grade 5 galvanized.

5.4 CONDUIT SYSTEM

Conduit shall be placed a minimum of 24 inches below finished grade and shall slope to a pull box at a minimum rate of 6 inches for 100 feet, unless otherwise shown on the Plans. A change in direction of conduit shall be accomplished by bending the conduit uniformly to a radius which will fit the location or by the use of standard bends or elbows. Minimum radius of the bend shall be six times the internal diameter of the conduit. All fittings shall be tightly connected to the conduit. open ends of conduit placed for future use shall be capped or plugged. When approved by the engineer, conduit may be installed either by trenching or pushing; however, payment will be made by the method designated in the contract for that conduit.

5.4.1 CONDUIT IN TRENCH

Trenches shall be excavated to the width and depth necessary for conduit installation. Materials which might cause mechanical damage to the conduit shall not be used for backfilling below an elevation 6 inches above the conduit. The bottom of the trench shall be free of such materials before the conduit is placed. No conduit shall be placed without approval of the trench by the engineer. All trenches shall be backfilled as soon as practicable after installation of conduit. Backfill material shall be deposited in the trench in layers not exceeding 6 inches in depth. Each layer shall be compacted to the approximate density of the adjacent material before the next layer is placed. When excavation is made across parkways or driveways, sod, topsoil and crushed stone or gravel shall be replaced as nearly as practicable to its former condition. Concrete or bituminous surfaces and stabilized bases shall be restored to their former condition. The entire area involved shall be left in a neat, presentable condition.

5.4.2 PUSHED CONDUIT

If pushed conduit is specified the conduit shall be installed without disturbing the existing surface. Pushed conduit may be placed by jacking, pushing, boring or other approved means.

5.5 SIDEWALKS AND CURBS

When it is necessary to cut a street pavement, driveway, or sodded area in order to install traffic signal conduits, bases or accessories the Contractor shall repair same in accordance with

the Department of Public Works standard specifications adopted herein by reference. No cuts are to be made in curbs or sidewalks or placement of conduit where pushed conduit is indicated on Plan sheets. Curb bases are to be bored for pushed conduit installation. When sidewalks are cut for installation of signal bases, the entire surrounding square or block of the sidewalk, to the nearest expansion or scored joint, shall be replaced. In cases where the existing sidewalk is of considerable width or extends from curb to building line and the blocks or squares are not cut into readily identifiable squares or blocks, then an opening around the cut made in the existing sidewalk shall be sawed instead of removing a certain block. The saw cut shall be made at least one-half the depth of the existing sidewalk. It shall be outside of the cut as made in the sidewalk and there shall not be left a width of less than three feet from the edge of the saw cut to an existing identifiable construction or expansion joint in the existing sidewalk. The sidewalk are so removed shall be replaced in compliance with applicable City standards.

5.6 SIGNAL FACES

Signal faces shall be completely covered with rugged cloth material (burlap or equivalent) securely attached by wire until the time the signal is ready to be flashed or placed in normal operation. When ready for operation, they shall be securely fastened in position facing approaching traffic. Horizontally mounted lamps shall be installed by the contractor with the open segment of the filament up. Signal faces shall be aimed at the approximate center of the lane or lanes they control or as directed by the Engineer. Signal Heads mounted on mast arm poles shall be wired individually to the base of the pole where they are to be spliced to the control cable from the controller.

5.7 LOOP DETECTOR
A slot for installation of induction loop cable three inches deep and 2 inch wide shall be sawed in the pavement as shown on the Plans. The slot shall be brushed or blown clean. The cable shall be pushed into the slot without damaging the insulation. After the loop cable is spliced to the lead-in cable and before the slot is sealed, the resistance of the loop and lead-in cable to ground shall be checked. After a satisfactory test which shows resistance of not less than 10 megohms, the slot shall be sealed. Approved sealants listed in section 3.4. Additional construction details are shown on TCD-0-4.

5.8 MAGNETOMETER AND MICROLOOP DETECTOR
When specified, the magnetometer or microloop detector system shall be installed in accordance with the manufacturers specifications. Cable runs between sensor units through the pull box (or junction box) and on to the controller cabinet shall be continuous for each channel. Exact placement of sensor heads and layout of saw cuts for magnetometer detectors will be determined by the Engineer.

5.9 POST INSTALLATIONS

Post bases shall be securely anchored to concrete bases. Pedestal posts shall be erected vertically without use o

leveling nuts. Metal posts for span wire and cantilever mast arms shall be adjusted by leveling nuts. All posts for span wire and cantilever mast arms shall be raked as directed by the Engineer. All signal posts shall be grounded by a No. 6 AWG bare copper wire from the ground lug inside the post to a clamp fastened to a ground rod.

5.9.1 STREET NAME SIGNS INSTALLED ON MAST ARM POLES
Street name signs shall be provided by the Transportation Department and installed by the contractor. Said work shall be considered incidental to the installation of the mast arm and no separate payment shall be made.

5.10 WIRING

5.10.1 SWITCHING AND POWER CABLE RUNS
All cable runs shall be continuous without splice from the connections in the terminal block of the signal head or disconnect hanger to the terminal strip in the controller cabinet for base mounted cabinets or to the designated pull box for pole mounted or pedestal mounted cabinets, or from the signal terminal block to another signal terminal block, or as shown on the Plans. Power cable runs shall be continuous without splice from the power line switch located on the service pole to controller cabinet terminals. Energized power cables shall run to circuit breakers. The neutral cable shall be terminated on the bus bar in the controller cabinet.

5.10.2 INDUCTION LOOP WIRING
Induction loop dimensions shall be as shown on the Plans. Should the manufacturer recommend a different type of lead-in cable, the two shall be continuous from the terminal strip in controller cabinet to a splice with the detector leads in the pull box adjacent to the detector. The conductor splice shall be made with pressed sleeve connectors, or equivalent. Each spliced conductor shall be insulated with a minimum of four half-lapped layers of all weather plastic tape. The completed splice shall be insulated with a protective plastic case installed around the cable. Ends of the case shall be sealed with plastic tape and the case poured full of insulating compound, mixed in accordance with manufacturer=s recommendation. Saw cut sealants shall be of one of the types shown on the Plans, or an approved substitute.

5.10.3 CABLE IDENTIFICATION
All circuits shall be properly labeled in all pull boxes, controller cabinets terminal compartments and junction boxes, by aluminum identification tags attached to the cables with aluminum or copper wire. Information stamped on the tags shall identify equipment served by the conductor cable in accordance with designations used on the Plans.

5.10.4 CABLE PULLING AND SYSTEM GROUNDING
Cable shall be pulled through conduit by a cable grip providing a firm hold on exterior coverings. Cable shall be pulled with a minimum of dragging on the ground or pavement. Frame mounted pulleys or other

suitable devices, shall be used for pulling cables out of conduits into pull boxes. Lubricants may be used

to facilitate pulling cables out of conduits into pull boxes. Slack in each cable shall be provided by a six-foot loop in each pull box and a three-foot in each junction box.

5.11 TEST PERIOD, INSPECTION AND ACCEPTANCE PROCEDURES

(a) through (e) pertains to all equipment except the Type 170 system controller.

(a) When the contractor is certain that the installation is ready for operation and meets this Specification ' he shall make arrangements for inspection by the Transportation Department.

(b) Upon completion of the inspection, the Transportation Department representative may establish the day and time for turn an of the signal installation. If deficiencies exist, a list of same will be sent to the contractor. As soon as practicable, the Contractor shall correct noted deficiencies and arrange for another inspection by the Department.

(c) Upon receipt of written authorization, the Contractor shall place the signal in operation, begin a 15 (fifteen) day trial period. Subsequent operational failure of all or part of the installation may, at the discretion of the Transportation Department be cause for turn off for repair or revisions. Failure or operational problems occurring during the fifteen (15) day trial period may require reinstatement of the procedures described in sub-secticns 5.11 (a) and (b).

(d) When in the opinion of the Transportation Department, the signal installation has operated satisfactorily for fifteen (15) consecutive days, a final inspection by the Department will be made. A written communication, confirming final acceptance for the installation will then be sent to the Contractor by the Transportation Department.

(e) Before acceptance of the work, the Contractor, shall furnish the Engineer three copies of the manufacturer's instructions for maintenance and operation of all signal equipment and wiring diagrams of the installation or system.

5.11.1 ACCEPTANCE PROCEDURE FOR THE TYPE 170 SYSTEM CONTROLLER
The Type 170 System Traffic Controllers are to be shipped directly to the City Traffic Signal Maintenance Shop by the supplier and shall undergo the following acceptance procedures:

a. When received they will be checked for completeness and physical compliance with the specification.

b. If the controller passes test "all, then a complete electrical, electronic and software test will be run.

C. If the controller does not pass either test it will be turned over to the supplier for repair or replacement.

d. If the controller does pass these tests the controller is accepted at that point.

e. The controller and power supply will then be installed and turned on by the City.

f. The contractor and/or the supplier is welcome to observe any part of the test procedures.

SECTION 6 EQUIPMENT COLOR - PAINTING AND COLOR IMPREGNATION OF MOLDED PLASTIC COMPONENTS

(a) Painting of steel supports shall conform to the "Standard Specifications for Highway Bridges" published by AASHTO. Galvanizing of steel supports shall conform to the requirements of AASHTO M111. Tubular steel poles shafts to be galvanized shall have a silicon content equal or less than 0.06%.

(b) Painting of any portion of molded polycarbonate signal components will not be permitted. Proper specified colors for each component shall be resin impregnated as part of the molding process in manufacture.

(c) All exterior parts of signal heads, including mounting brackets and other hardware and louvers and visors, shall be black in color. The backs, sides, framework and mounting hardware shall be gloss black. Signal section door fronts, louvers and visors shall be flat black. Aluminum or zinc plated mast arm hardware need not be painted.

(d) All exterior surfaces of controller cabinets, pedestal posts, poles, mast arms, push button frames and associated hardware except where aluminum or galvanized steel finish is specified, shall be silver in color.

(e) Pedestals, poles and arms of spun aluminum will not be painted. Street-scape aluminum posts shall be finished with Bronze Integral Color, Aluminum Association Class I Anodizing (Duranodic or Kalcolor).

(f) Controller cabinets shall be natural aluminum.

SECTION 7 METHOD OF MEASUREMENT AND BASIS OF PAYMENT

(a) For those items on which final payment is based on contract quantities, final measurement will not be made except for authorized changes during construction, or where appreciable errors are found in

the contract quantity. The revision or correction will be computed and added to or deducted from the contract quantity.

(b) BASIS OF PAYMENT
Accepted traffic signal installations will be paid for at the bid price for each of the pay items included in the Contract. No direct payment will be made for any incidental items necessary to complete the work unless specifically provided as a pay item in the Contract.

SECTION 8 CONTRACT TIME

PUBLIC WORKS - Modified for Transportation
00800 Supplementary Conditions

G. Contract Time: Time of completion for all work issued as part of this contract shall be the number of working days indicated in the contract and shall begin on the date indicated on the Notice to Proceed. A working day is any week day that the contractor can work 6 hours on a major item of the project.

SECTION 16070A

SEISMIC PROTECTION FOR ELECTRICAL EQUIPMENT
04/99

PART 1 GENERAL

1.1 REFERENCES

The publications listed below form a part of this specification to the extent referenced. The publications are referred to in the text by basic designation only.

AMERICAN SOCIETY FOR TESTING AND MATERIALS (ASTM)

ASTM E 580	(1996) Application of Ceiling Suspension Systems for Acoustical Tile and Lay-in Panels in Areas Requiring Moderate Seismic Restraint

U.S. ARMY CORPS OF ENGINEERS (USACE)

TI 809-04	(1998) Seismic Design for Buildings

UNDERWRITERS LABORATORIES (UL)

UL 1570	(1995; Rev thru Feb 1999) Fluorescent Lighting Fixtures
UL 1571	(1995; Rev thru Feb 1999) Incandescent Lighting Fixtures

1.2 SUBMITTALS

Government approval is required for submittals with a "G" designation; submittals not having a "G" designation are for information only. When used, a designation following the "G" designation identifies the office that will review the submittal for the Government. The following shall be submitted in accordance with Section 01330 SUBMITTAL PROCEDURES:

SD-02 Shop Drawings

Lighting Fixtures in Buildings; [_____], [_____]
Equipment Requirements; [_____], [_____]

Detail drawings along with catalog cuts, templates, and erection and installation details, as appropriate, for the items listed. Submittals shall be complete in detail; shall indicate thickness, type, grade, class of metal, and dimensions; and shall show construction details, reinforcement, anchorage, and installation with relation to the building construction.

SD-03 Product Data

Lighting Fixtures in Buildings; G, [_____]
Equipment Requirements; G, [_____]

Copies of the design calculations with the detail drawings. Calculations shall be stamped by a registered engineer and shall verify the capability of structural members to which bracing is attached for carrying the load from the brace.

Contractor Designed Bracing; G, [_____]

Copies of the Design Calculations with the Drawings. Calculations shall be approved, certified, stamped and signed by a Registered Professional Engineer. Calculations shall verify the capability of structural members to which bracing is attached for carrying the load from the brace.

1.3 SYSTEM DESCRIPTION

1.3.1 General Requirements

The requirements for seismic protection measures described in this section shall be applied to the electrical equipment and systems listed below. Structural requirements shall be in accordance with Section 13080 SEISMIC PROTECTION FOR MISCELLANEOUS EQUIPMENT.

1.3.2 Electrical Equipment

Electrical equipment shall include the following items to the extent required on the drawings or in other sections of these specifications:

Control Panels	Air Handling Units
Pumps with Motors	Switchgear
Light Fixtures	Unit Substations
Motor Control Centers	Transformers
Switchboards (Floor Mounted)	Storage Racks
[_____]	Solar Heating Units

1.3.3 Electrical Systems

The following electrical systems shall be installed as required on the drawings and other sections of these specifications and shall be seismically protected in accordance with this specification: [_____]

1.3.4 Contractor Designed Bracing

The Contractor shall design the bracing in accordance with TI 809-04 and additional data furnished by the Contracting Officer. Resistance to lateral forces induced by earthquakes shall be accomplished without consideration of friction resulting from gravity loads. TI 809-04 uses parameters for the building, not for the equipment in the building; therefore, corresponding adjustments to the formulas shall be required.

Loadings determined using TI 809-04 are based on strength design; therefore, the AISC LRFP specifications shall be used for the design. The bracing for the following electrical equipment and systems shall be developed by the Contractor: [_____].

1.3.5 Conduits Requiring No Special Seismic Restraints

Seismic restraints may be omitted from electrical conduit less than 2-1/2 inches trade size and [_____]. All other interior conduit, shall be seismically protected as specified.

1.4 EQUIPMENT REQUIREMENTS

1.4.1 Rigidly Mounted Equipment

The following specific items of equipment: [_____] to be furnished under this contract shall be constructed and assembled to withstand the seismic forces specified in TI 809-04, Chapter 10. Each item of rigid electrical equipment shall be entirely located and rigidly attached on one side only of a building expansion joint. Piping, electrical conduit, etc., which cross the expansion joint shall be provided with flexible joints that are capable of accommodating displacements equal to the full width of the joint in both orthogonal directions.

Engine-Generators
Substations
Transformers
Switch Boards and Switch Gears
Motor Control Centers
Free Standing Electric Motors
[_____]

1.4.2 Nonrigid or Flexibly-Mounted Equipment

The following specific items of equipment to be furnished: [_____] shall be constructed and assembled to resist a horizontal lateral force of [_____] times the operating weight of the equipment at the vertical center of gravity of the equipment.

PART 2 PRODUCTS

2.1 LIGHTING FIXTURE SUPPORTS

Lighting fixtures and supports shall conform to UL 1570 or UL 1571 as applicable.

2.2 SWAY BRACING MATERIALS

Sway bracing materials (e.g. rods, plates, rope, angles, etc.) shall be as specified in Section 13080 SEISMIC PROTECTION FOR MISCELLANEOUS EQUIPMENT.

PART 3 EXECUTION

3.1 SWAY BRACES FOR CONDUIT

Conduit shall be braced as for an equivalent weight pipe in accordance with Section 15070 SEISMIC PROTECTION FOR MECHANICAL EQUIPMENT.

3.2 LIGHTING FIXTURES IN BUILDINGS

Lighting fixtures and supports shall conform to the following:

3.2.1 Pendant Fixtures

Pendant fixtures shall conform to the requirements of TI 809-04, Chapter 10.

3.2.2 Ceiling Attached Fixtures

3.2.2.1 Recessed Fluorescent Fixtures

Recessed fluorescent individual or continuous-row mounted fixtures shall be supported by a seismic-resistant suspended ceiling support system built in accordance with [ASTM E 580] [Section 09510 ACOUSTICAL CEILINGS]. Seismic protection for the fixtures shall conform to the requirements of TI 809-04, Chapter 10. Recessed lighting fixtures not over 56 pounds in weight may be supported by and attached directly to the ceiling system runners using screws or bolts, number and size as required by the seismic design. Fixture accessories, including louvers, diffusers, and lenses shall have lock or screw attachments.

3.2.2.2 Surface-Mounted Fluorescent Fixtures

Surface-mounted fluorescent individual or continuous-row fixtures shall be attached to a seismic-resistant ceiling support system built in accordance with [ASTM E 580] [Section 09510 ACOUSTICAL CEILINGS]. Seismic protection for the fixtures shall conform to the requirements of TI 809-04, Chapter 10.

3.2.3 Assembly Mounted on Outlet Box

A supporting assembly, that is intended to be mounted on an outlet box, shall be designed to accommodate mounting features on [4] [3] inch boxes, plaster rings, and fixture studs.

3.2.4 Wall-Mounted Emergency Light Unit

Attachments for wall-mounted emergency light units shall be designed and secured for the worst expected seismic disturbance at the site.

3.2.5 Lateral Force

Structural requirements for light fixture bracing shall be in accordance with Section 13080 SEISMIC PROTECTION FOR MISCELLANIOUS EQUIPMENT.

-- End of Section --

SECTION 16375

ELECTRICAL DISTRIBUTION SYSTEM, UNDERGROUND
11/92

PART 1 GENERAL

1.1 REFERENCES

The publications listed below form a part of this specification to the extent referenced. The publications are referred to in the text by basic designation only.

AMERICAN NATIONAL STANDARDS INSTITUTE (ANSI)

ANSI C80.1	(1995) Rigid Steel Conduit - Zinc Coated

AMERICAN SOCIETY FOR TESTING AND MATERIALS (ASTM)

ASTM A 123/A 123M	(1997a) Zinc (Hot-Dip Galvanized) Coatings on Iron and Steel Products
ASTM A 153/A 153M	(1995) Zinc Coating (Hot-Dip) on Iron and Steel Hardware
ASTM B 8	(1993) Concentric-Lay-Stranded Copper Conductors, Hard, Medium-Hard, or Soft
ASTM B 117	(1997) Operating Salt Spray (Fog) Apparatus
ASTM D 1654	(1992) Evaluation of Painted or Coated Specimens Subjected to Corrosive Environments

INSTITUTE OF ELECTRICAL AND ELECTRONICS ENGINEERS (IEEE)

IEEE C2	(1997) National Electrical Safety Code
IEEE Std 81	(1983) Guide for Measuring Earth Resistivity, Ground Impedance, and Earth Surface Potentials of a Ground System (Part 1)
IEEE Std 100	(1996) IEEE Standard Dictionary of Electrical and Electronics Terms

NATIONAL ELECTRICAL MANUFACTURERS ASSOCIATION (NEMA)

NEMA AB 1	(1993) Molded Case Circuit Breakers and Molded Case Switches
NEMA FB 1	(1993) Fittings, Cast Metal Boxes and Conduit Bodies for Conduit and Cable Assemblies
NEMA FU 1	(1986) Low Voltage Cartridge Fuses
NEMA PB 1	(1990) Panelboards
NEMA TC 6	(1990) PVC and ABS Plastic Utilities Duct for Underground Installation
NEMA FU 1	(1986) Low Voltage Cartridge Fuses
NEMA ICS 2	(1993) Industrial Controls and Systems Controllers, Contactors, and Overload Relays Rated Not More Than 2,000 Volts AC or 750 Volts DC
NEMA RN 1	(1998) Polyvinyl-Chloride (PVC) Externally Coated Galvanized Rigid Steel Conduit and Intermediate Metal Conduit

NATIONAL FIRE PROTECTION ASSOCIATION (NFPA)

NFPA 70	(2002) National Electrical Code
NFPA 101	(2000)Life Safety Code

UNDERWRITERS LABORATORIES (UL)

UL 6	(1997) Rigid Metal Conduit
UL 198C	(1986; Rev thru Feb 1998) High-Interrupting-Capacity Fuses, Current-Limiting Types
UL 198D	(1995) Class K Fuses
UL 198E	(1988; Rev Jul 1988) Class R Fuses
UL 198H	(1988; Rev thru Nov 1993) Class T Fuses
UL 467	(1993; Rev thru Aug 1996) Grounding and Bonding Equipment
UL 486A	(1997) Wire Connectors and Soldering Lugs for Use with Copper Conductors
UL 489	(1996; Rev thru Nov 1997) Molded-Case

	Circuit Breakers, Molded-Case Switches, and Circuit-Breaker Enclosures
UL 510	(1994; Rev thru Apr 1998) Polyvinyl Chloride, Polyethylene and Rubber Insulating Tape
UL 514A	(1996; Rev Jul 1999) Metallic Outlet Boxes
UL 651	(1995; Rev thru Oct 1998) Schedule 40 and 80 Rigid PVC Conduit
UL 854	(1996; Rev Apr 1998) Service-Entrance Cables
UL 1242	(1996; Rev Apr 1997) Intermediate Metal Conduit

1.2 GENERAL REQUIREMENTS

1.2.1 Terminology

Terminology used in this specification is as defined in IEEE Std 100.

1.2.2 Rules

The installation shall conform to the requirements of NFPA 70 unless more stringent requirements are indicated or shown.

1.2.3 Coordination

The drawings indicate the extent and the general location and arrangement of equipment, conduit, and wiring. The Contractor shall become familiar with all details of the work and verify all dimensions in the field so that the equipment shall be properly located and readily accessible. If any conflicts occur necessitating departures from the drawings, details of and reasons for departures shall be submitted and approved prior to implementing any change. The Contractor shall coordinate the electrical requirements of the mechanical work and provide all power related circuits, wiring, hardware and structural support, even if not shown on the drawings.

1.2.4 Special Environments

1.2.4.1 Weatherproof Locations

Wiring, and equipment in outdoor locations shall conform to NFPA 70 requirements for installation in damp or wet locations.

1.3 SUBMITTALS

Government approval is required for submittals with a "G" designation; submittals not having a "G" designation are for information only. When used, a designation following the "G" designation identifies the office that will review the submittal for the Government. The following shall be submitted in accordance with Section 01330 SUBMITTAL PROCEDURES:

SD-01 Data

Manufacturer's Catalog Data; G, RE

Catalog cuts, brochures, circulars, specifications, product data, and printed information in sufficient detail and scope to verify compliance with the requirements of the contract documents.

Material, Equipment, Lists; G, RE

A complete itemized listing of equipment and materials proposed for incorporation into the work. Each entry shall include an item number, the quantity of items proposed, and the name of the manufacturer of each such item.

Installation Procedures; G, RE

Procedures shall include diagrams, instructions, and precautions required to install, adjust, calibrate, and test the devices and equipment.

SD-04 Drawings

Electrical Distribution System; G, RE

Detail drawings consisting of equipment drawings, illustrations, schedules, instructions, diagrams manufacturers standard installation drawings and other information necessary to define the installation and enable the Government to check conformity with the requirements of the contract drawings.

If departures from the contract drawings are deemed necessary by the Contractor, complete details of such departures shall be included with the detail drawings. Approved departures shall be made at no additional cost to the Government.

Detail drawings shall show how components are assembled, function together and how they will be installed on the project. Data and drawings for component parts of an item or system shall be coordinated and submitted as a unit. Data and drawings shall be coordinated and included in a single submission. Multiple submissions for the same equipment or system are not acceptable except where prior approval has been obtained from the Contracting Officer. In such cases, a list of data to be submitted later shall be included with the first submission. Detail drawings shall consist of the following:

a. Detail drawings showing physical arrangement, construction details, connections, finishes, materials used in fabrication, provisions for conduit or busway entrance, access requirements for installation and maintenance, physical size, electrical characteristics, foundation and support details, and equipment weight. Drawings shall be drawn to scale and/or dimensioned. All optional items shall be clearly identified as included or excluded.

b. Internal wiring diagrams of equipment showing wiring as actually provided for this project. External wiring connections shall be clearly identified.

As-Built Drawings; G, RE

The as-built drawings shall be a record of the construction as installed. The drawings shall include the information shown on the contract drawings as well as deviations, modifications, and changes from the contract drawings, however minor. The as-built drawings shall be a full sized set of prints marked to reflect deviations, modifications, and changes. The as-built drawings shall be complete and show the location, size, dimensions, part identification, and other information. Additional sheets may be added. The as-built drawings shall be jointly inspected for accuracy and completeness by the Contractor's quality control representative and by the Contracting Officer prior to the submission of each monthly pay estimate. Upon completion of the work, the Contractor shall provide three full sized sets of the marked prints to the Contracting Officer for approval. If upon review, the as-built drawings are found to contain errors and/or omissions, they will be returned to the Contractor for correction. The Contractor shall correct and return the as-built drawings to the Contracting Officer for approval within 10 calendar days from the time the drawings are returned to the Contractor.

SD-09 Reports

Factory Test; G, RE

Certified factory test reports shall be submitted when the manufacturer performs routine factory tests, including tests required by standards listed in paragraph REFERENCES. Results of factory tests performed shall be certified by the manufacturer, or an approved testing laboratory, and submitted within 7 days following successful completion of the tests. The manufacturer's pass-fail criteria for tests specified in paragraph FIELD TESTING shall be included.

Field Testing; G, RE

A proposed field test plan, 30days prior to testing the installed system. No field test shall be performed until the test plan is approved. The test plan shall consist of complete field test procedures including tests to be performed, test equipment required, and tolerance limits.

Test Reports; G, RE

Sixcopies of the information described below in 8-1/2 by 11 inch binders having a minimum of three rings, including a separate section for each test. Sections shall be separated by heavy plastic dividers with tabs.

a. A list of equipment used, with calibration certifications.

b. A copy of measurements taken.

c. The dates of testing.

d. The equipment and values to be verified.

e. The condition specified for the test.

f. The test results, signed and dated.

g. A description of adjustments made.

Cable Installation Reports; G, RE

Sixcopies of the information described below in 8-1/2 by 11 inch binders having a minimum of three rings from which material may readily be removed and replaced, including a separate section for each cable pull. Sections shall be separated by heavy plastic dividers with tabs, with all data sheets signed and dated by the person supervising the pull.

a. Site layout drawing with cable pulls numerically identified.

b. A list of equipment used, with calibration certifications. The manufacturer and quantity of lubricant used on pull.

c. The cable manufacturer and type of cable.

d. The dates of cable pulls, time of day, and ambient temperature.

e. The length of cable pull and calculated cable pulling tensions.

f. The actual cable pulling tensions encountered during pull.

SD-13 Certificates

Materials and Equipment; G, RE

Where materials or equipment are specified to conform to the standards of the Underwriters Laboratories (UL) or to be constructed or tested, or both, in accordance with the standards of the American National Standards Institute (ANSI), the Institute of Electrical and Electronics Engineers (IEEE), or the National Electrical Manufacturers Association (NEMA), the Contractor shall submit proof that the items provided conform to such requirements. The label of, or listing by, UL will be acceptable as evidence that the items conform. Either a certification or a published catalog specification data statement, to the effect that the item is in

accordance with the referenced ANSI or IEEE standard, will be acceptable as evidence that the item conforms. A similar certification or published catalog specification data statement to the effect that the item is in accordance with the referenced NEMA standard, by a company listed as a member company of NEMA, will be acceptable as evidence that the item conforms. In lieu of such certification or published data, the Contractor may submit a certificate from a recognized testing agency equipped and competent to perform such services, stating that the items have been tested and that they conform to the requirements listed, including methods of testing of the specified agencies. Compliance with above-named requirements does not relieve the Contractor from compliance with any other requirements of the specifications.

Cable Installer Qualifications; G, RE

The Contractor shall provide at least one onsite person in a supervisory position with a documentable level of competency and experience to supervise all cable pulling operations. A resume shall be provided showing the cable installers' experience in the last three years, including a list of references complete with points of contact, addresses and telephone numbers.

SD-19 OPERATION AND MAINTENANCE MANUALS

Electrical Distribution System; G, RE

Six copies of operation and maintenance manuals, within 7 calendar days following the completion of tests and including assembly, installation, operation and maintenance instructions, spare parts data which provides supplier name, current cost, catalog order number, and a recommended list of spare parts to be stocked. Manuals shall also include data outlining detailed procedures for system startup and operation, and a troubleshooting guide which lists possible operational problems and corrective action to be taken. A brief description of all equipment, basic operating features, and routine maintenance requirements shall also be included. Documents shall be bound in a binder marked or identified on the spine and front cover. A table of contents page shall be included and marked with pertinent contract information and contents of the manual. Tabs shall be provided to separate different types of documents, such as catalog ordering information, drawings, instructions, and spare parts data. Index sheets shall be provided for each section of the manual when warranted by the quantity of documents included under separate tabs or dividers.

Three additional copies of the instructions manual shall be provided within 30 calendar days following the manuals.

1.4 DELIVERY, STORAGE, AND HANDLING

Devices and equipment shall be visually inspected by the Contractor when received and prior to acceptance from conveyance. Stored items shall be protected from the environment in accordance with the manufacturer's published instructions. Damaged items shall be replaced. Oil filled transformers and switches shall be stored in accordance with the

manufacturer's requirements. Wood poles held in storage for more than 2 weeks shall be stored in accordance with ANSI O5.1. Handling of wood poles shall be in accordance with ANSI O5.1, except that pointed tools capable of producing indentations more than 1 inch in depth shall not be used. Metal poles shall be handled and stored in accordance with the manufacturer's instructions.

1.5 EXTRA MATERIALS

Two complete sets of all special tools required for maintenance shall be provided, complete with a suitable tool box. Special tools are those that only the manufacturer provides, for special purposes (to access compartments, or operate, adjust, or maintain special parts).

1.6 WORKMANSHIP

Materials and equipment shall be installed in accordance with NFPA 70, recommendations of the manufacturer, and as shown.

PART 2 PRODUCTS

2.1 STANDARD PRODUCT

Material and equipment shall be the standard product of a manufacturer regularly engaged in the manufacture of the product and shall essentially duplicate items that have been in satisfactory use for at least 2 years prior to bid opening. Items of the same classification shall be identical including equipment, assemblies, parts, and components.

2.2 NAMEPLATES

2.2.1 General

Each major component of this specification shall have the manufacturer's name, address, type or style, model or serial number, and catalog number on a nameplate securely attached to the equipment. Nameplates shall be made of noncorrosive metal. Equipment containing liquid dielectrics shall have the type of dielectric on the nameplate. Sectionalizer switch nameplates shall have a schematic with all switch positions shown and labeled. As a minimum, nameplates shall be provided for panelboard, lighting cabinet, controllers and devices.

2.3 CORROSION PROTECTION

2.3.1 Aluminum Materials

Aluminum shall not be used.

2.3.2 Ferrous Metal Materials

2.3.2.1 Hardware

Ferrous metal hardware shall be hot-dip galvanized in accordance with ASTM A 153/A 153M and ASTM A 123/A 123M.

2.3.2.2 Equipment

Equipment and component items, shall be provided with corrosion-resistant finishes which shall withstand 120 hours of exposure to the salt spray test specified in ASTM B 117 without loss of paint or release of adhesion of the paint primer coat to the metal surface in excess of 1/16 inch from the test mark. The scribed test mark and test evaluation shall be in accordance with ASTM D 1654 with a rating of not less than 7 in accordance with TABLE 1, (procedure A). Cut edges or otherwise damaged surfaces of hot-dip galvanized sheet steel or mill galvanized sheet steel shall be coated with a zinc rich paint conforming to the manufacturer's standard.

2.4 CABLES

Cables shall be single conductor type unless otherwise indicated. Sizes are based on copper conductors and the insulation types indicated. Sizes shall be not less than indicated. Branch-circuit conductors shall be not smaller than No. 12 AWG.

2.4.1 Low-Voltage Cables

Cables shall be rated 600 volts and shall conform to the requirements of NFPA 70, and must be UL listed for the application or meet the applicable section of either ICEA or NEMA standards.
Conductors No. 8 AWG and larger diameter shall be stranded. Conductors No. 10 AWG and smaller diameter shall be solid, except that conductors for remote control, alarm, and signal circuits, classes 1, 2, and 3, shall be stranded unless specifically indicated otherwise. Conductor sizes and ampacities shown are based on copper, unless indicated otherwise. All conductors shall be copper.

2.4.2 Equipment Manufacturer Requirements

When manufacturer's equipment requires copper conductors at the terminations or requires copper conductors to be provided between components of equipment, provide copper conductors or splices, splice boxes, and other work required to meet manufacturer's requirements.

2.4.3 Aluminum Conductors

Aluminum conductors shall not be used.

2.4.4 Insulation

Unless indicated otherwise, or required by NFPA 70, power and lighting

wires shall be 600-volt, Type THWN, THHN, THW conforming to UL 83, RHW conforming to UL 44, except that grounding wire may be type TW conforming to UL 83; remote-control and signal circuits shall be Type TW, THW or TF, conforming to UL 83. Where lighting fixtures require 90-degree Centigrade (C) conductors, provide only conductors with 90-degree C insulation or better.

2.4.5 Bonding Conductors

ASTM B 1, solid bare copper wire for sizes No. 8 AWG and smaller diameter; ASTM B 8, Class B, stranded bare copper wire for sizes No. 6 AWG and larger diameter.

2.4.6 Service Entrance Cables

Service entrance (SE) and underground service entrance (USE) cables, UL 854.

2.4.7 Non-metallic Sheathed Cable

UL 719, type NM or NMC.

2.5 CONDUIT AND DUCTS

Ducts shall be single, round-bore type, with wall thickness and fittings suitable for the application.Duct lines shall be concrete-encased, thin-wall type.Duct lines shall be nonencased direct-burial, thick-wall type.

2.5.1 Metallic Conduit

Intermediate metal conduit shall comply with UL 1242. Rigid galvanized steel conduit shall comply with UL 6 and ANSI C80.1. Metallic conduit fittings and outlets shall comply with UL 514A and NEMA FB 1.

2.5.2 Nonmetallic Ducts

2.6.2.2 Concrete Encased Ducts

UL 651 Schedule 40 or NEMA TC 6 Type EB.

2.5.3 Direct Burial

UL 651 Schedule 80 or NEMA TC 6 Type DB.

2.5.4 Conduit Sealing Compound

Compounds for sealing ducts and conduit shall have a putty-like consistency workable with the hands at temperatures as low as 35 degrees F, shall neither slump at a temperature of 300 degrees F, nor harden materially when exposed to the air. Compounds shall adhere to clean surfaces of fiber or plastic ducts; metallic conduits or conduit coatings; concrete, masonry, or lead; any cable sheaths, jackets, covers, or insulation materials; and the common metals. Compounds shall form a seal without dissolving, noticeably changing characteristics, or removing any of the ingredients. Compounds shall have no injurious effect upon the hands of workmen or upon materials.

2.6 HANDHOLES, AND PULLBOXES

Handholes for low voltage cables installed in parking lots, sidewalks, and turfed areas shall be fabricated from an aggregate consisting of sand and with continuous woven glass strands having an overall compressive strength of at least and a flexural strength of at least Pullbox and handhole covers in sidewalks, and turfed areas shall be of the same material as the box. Concrete pullboxes shall consist of precast reinforced concrete boxes, extensions, bases, and covers.

2.7 SERVICE EQUIPMENT

Service-disconnecting means shall be of the enclosed molded-case circuit breaker type with an external handle for manual operation. When service disconnecting means is a part of an assembly, the assembly shall be listed as suitable for service entrance equipment. Enclosures shall be sheet metal with hinged cover for surface mounting unless otherwise indicated.

2.8 PANELBOARDS AND LOADCENTERS

Circuit breakers and switches used as a motor disconnecting means shall be capable of being locked in the open position. Door locks shall be keyed alike. Nameplates shall be as approved. Directories shall be typed to indicate loads served by each circuit and mounted in a holder behind a clear protective covering. Busses shall be copper.

2.8.1 Loadcenters

Loadcenters are not acceptable.

2.8.2 Panelboards

Panelboards shall be circuit breaker type as indicated on the drawings. Switches serving as motor disconnect means shall be horsepower rated in conformance with UL 98.

2.9 CIRCUIT BREAKERS

2.9.1 MOLDED-CASE CIRCUIT BREAKERS

Molded-case circuit breakers shall conform to NEMA AB 1 and UL 489. Circuit breakers may be installed in panelboards & enclosures.

2.9.1.1 Construction

Circuit breakers shall be suitable for mounting and operating in any position. Lug shall be listed for copper conductors only or copper and aluminum conductors in accordance with UL 486E. Single-pole circuit breakers shall be full module size with not more than one pole per module. Multi-pole circuit breakers shall be of the common-trip type having a single operating handle such that an overload or short circuit on any one pole will result in all poles opening simultaneously. Sizes of 100 amperes or less may consist of single-pole breakers permanently factory assembled into a multi-pole unit having an internal, mechanical, nontamperable common-trip mechanism and external handle ties. All circuit breakers shall have a quick-make, quick-break overcenter toggle-type mechanism, and the handle mechanism shall be trip-free to prevent holding the contacts closed against a short-circuit or sustained overload. All circuit breaker handles shall assume a position between "ON" and "OFF" when tripped automatically. All ratings shall be clearly visible.

2.9.1.2 Ratings

Voltage ratings shall be not less than the applicable circuit voltage. The interrupting rating of the circuit breakers shall be at least equal to the available short-circuit current at the line terminals of the circuit breaker and correspond to the UL listed integrated short-circuit current rating specified for the panelboards and switchboards. Molded-case circuit breakers shall have nominal voltage ratings, maximum continuous-current ratings, and maximum short-circuit interrupting ratings in accordance with NEMA AB 1. Ratings shall be coordinated with system X/R ratio.

2.9.1.3 Thermal-Magnetic Trip Elements

Thermal magnetic circuit breakers shall be provided as shown. Automatic operation shall be obtained by means of thermal-magnetic tripping devices located in each pole providing inverse time delay and instantaneous circuit protection. The instantaneous magnetic trip shall be adjustable and accessible from the front of all circuit breakers on frame sizes above 150 amperes.

2.9.2 SWD Circuit Breakers

Circuit breakers rated 15 amperes and intended to switch 277 volts or less fluorescent lighting loads shall be marked "SWD."

2.10 CONDUITS

2.10.1 Intermediate Metal Conduit

UL 1242.

2.10.2 PVC Coated Rigid Steel Conduit

NEMA RN 1.

2.10.3 Rigid Metal Conduit

UL 6.

2.11 CONDUIT AND DEVICE BOXES AND FITTINGS

2.11.1 Fittings for Conduit and Outlet Boxes

UL 514B.

2.11.2 Fittings For Use in Hazardous (Classified) Locations

UL 886.

2.11.3 Fittings, PVC, for Use with Rigid PVC Conduit and Tubing

UL 514B.

2.12 CONNECTORS, WIRE PRESSURE

Use With Copper Conductors

UL 486A.

2.13 ENCLOSURES

2.13.1 Cabinets and Boxes

Cabinets and boxes with volume greater than 100 cubic inches shall be in accordance with UL 50, hot-dip, zinc-coated, if sheet steel. The enclosures shall be NEMA 250, Type 3R for main panel eclosures . Provide interior metal panel for mounting electrical components and' power panel. The enclosure door frame shall be double flanged out on all four sides. All exterior seams shall be continuously welded weather tight. The door for the NEMA 3R enclosures shall have a heavy gauge continuous hinge with stainless steel hinge pin and held closed by flush latch operable by key. All enclosures shall be opened with the same key. The enclosure finish by federal standard #201478, forest green. All enclosures shall be factory painted.

2.13.2 Circuit Breaker Enclosures

UL 489.

2.14 PANELBOARDS

Dead-front construction, NEMA PB 1 and UL 67.

2.15 Service Entrance Equipment

UL 869A.

2.16 TAPES

2.16.1 Plastic Tape

UL 510.

2.25.2 Rubber Tape

UL 510.

2.17 LOW-VOLTAGE FUSES AND FUSEHOLDERS

2.17.1 Fuses, Low Voltage Cartridge Type

NEMA FU 1.

2.17.2 Fuses, High-Interrupting-Capacity, Current-Limiting Type

Fuses, Class G, J, L and CC shall be in accordance with UL 198C.

2.17.3 Fuses, Class K, High-Interrupting-Capacity Type

UL 198D.

2.17.4 Fuses, Class H

UL 198B.

2.17.5 Fuses, Class R

UL 198E.

2.15.6 Fuses, Class T

UL 198H.

2.18 Watthour Meters socket

Watthour meters socket shall conform to KCPL requirements.

2.19 WATER LEVEL PROBE

The system shall be a electrode-activated floatless liquid level control system which consists of a control relay and a holder designed to support three electrodes. The system shall be installed as shown on drawings. After installation, the system must be tested to insure the system work as described on drawings.

2.19.1 Induction Type Control Relay

The control relay shall have a 120 volt, 60Hz line voltage and 220 volt A.C. secondary coil voltage. (The secondary voltage is based on the conductivity of ordinary potable water). There shall be at least one normally closed contact for the lighting circuit and one normally open contact for the immersion heater. The contact shall be rated for 25 amp resistive at 120 volts. The control relay shall be installed in a NEMA 1 enclosure and located in each main panel cabinet.

2.19.2 Electrode Holder Assembly

The assembly shall consist of a cast iron flanged electrode holder threaded onto a 3 inch UV protected sch. 80 pvc pipe.

2.19.3 Electrodes

The electrodes shall be wire suspended or solid rod. Wire suspension electrodes shall be 303 stainless steel and assembled in a molded plastic insulating shield. The suspension wire shall be a single conductor 18 gauge, 41 strand copper with a min. 4/64-inch vinyl insulation. Solid rod electrodes shall 316 stainless steel.

2.19.4 Probe Assembly Box

The box shall be 3/16-inch gauge stainless steel and sized to house probe assembly as detail on drawings. The box shall be mounted recessed in concrete wall. The front of the box shall have a 3/16-inch gauge stainless steel cover plate and 1/4-inch stainless steel grill cover below to allow water to reach to probe. The front cover shall be attached with min. 1/4-inch stainless bolts. The box shall be located as indicated on drawings.

2.19.5 Contacts

Contacts in miscellaneous control devices such and auxiliary relays shall have current and voltage ratings in accordance with NEMA ICS 2 for rating designation B300.

2.20 GROUNDING AND BONDING

2.20.1 Driven Ground Rods

Ground rods shall be copper-clad steel conforming to UL 467 not less than 5/8 inch] in diameter by 10 feet in length. Sectional type rods may be used.

2.20.2 Grounding Conductors

Grounding conductors shall be bare, except where installed in conduit with associated phase conductors. Insulated conductors shall be of the same material as phase conductors and green color-coded, except that conductors shall be rated no more than 600 volts. Bare conductors shall be ASTM B 8 soft-drawn unless otherwise indicated. Aluminum is not acceptable.

2.21 CONCRETE AND REINFORCEMENT

Concrete work shall have minimum 3000 psi compressive strength.

PART 3 EXECUTION

3.1 GENERAL INSTALLATION REQUIREMENTS

Equipment and devices shall be installed and energized in accordance with the manufacturer's published instructions. Steel conduits installed underground shall be installed and protected from corrosion Except as covered herein, excavation, trenching, and backfilling shall conform to the requirements of Section 02316 EXCAVATION, TRENCHING, AND BACKFILLING FOR UTILITIES SYSTEMS. Concrete work shall have minimum 3000 psi compressive strength.

3.1.1 Conformance to Codes

The installation shall comply with the requirements and recommendations of NFPA 70 and IEEE C2 as applicable.

3.1.2 Verification of Dimensions

The Contractor shall become familiar with details of the work, shall verify dimensions in the field, and shall advise the Contracting Officer of any discrepancy before performing any work.

3.2 Conductor Identification and Tagging

Power, control, and signal circuit conductor identification shall be provided within each enclosure where a tap, splice, or termination is made. Where several feeders pass through a common pull box, the feeders shall be tagged to indicate clearly the electrical characteristics, circuit number, and panel designation. Phase conductors of low voltage power circuits shall be identified by color coding. Phase identification by a particular color shall be maintained continuously for the length of a circuit, including junctions.

a. Color coding shall be provided for service, feeder, branch, and ground conductors. Color shall be green for grounding conductors and white for neutrals; except where neutrals of more than one system are installed in the same raceway or box, other neutral shall be white with colored (not green) stripe. The color coding for 3-phase and single-phase low voltage systems shall be as follows:

   120/208-volt, 3-phase: Black(A), red(B), and blue(C).
   277/480-volt, 3-phase: Brown(A), orange(B), and yellow(C).

b. Conductor phase and voltage identification shall be made by color-coded insulation for all conductors smaller than No. 6 AWG. For conductors No. 6 AWG and larger, identification shall be made by color-coded insulation, or conductors with black insulation may be furnished and identified by the use of half-lapped bands of colored electrical tape wrapped around the insulation for a minimum of 3 inches of length near the end, or other method as submitted by the Contractor and approved by the Contracting Officer.

c. Control and signal circuit conductor identification shall be made by color-coded insulated conductors, plastic-coated self-sticking printed markers, permanently attached stamped metal foil markers, or equivalent means as approved. Control circuit terminals of equipment shall be properly identified. Terminal and conductor identification shall match that shown on approved detail drawings. Hand lettering or marking is not acceptable.

3.3 CABLE INSTALLATION

The Contractor shall obtain from the manufacturer an installation manual or set of instructions which addresses such aspects as cable construction, insulation type, cable diameter, bending radius, cable temperature, lubricants, coefficient of friction, conduit cleaning,and storage procedures.

3.3.1 Cable Installation Plan and Procedure

Cable shall be installed strictly in accordance with the cable manufacturer's recommendations. Each circuit shall be identified by means of a fiber, laminated plastic, or non-ferrous metal tags, or approved equal, in each pullbox, junction box, and each terminal. Each tag shall contain the following information; , circuit number, circuit voltage, and cable destination.

3.3.2 Duct Cleaning

Duct shall be cleaned with an assembly that consists of a flexible mandrel (manufacturers standard product in lengths recommended for the specific size and type of duct) that is 1/4 inch less than inside diameter of duct, 2 wire brushes, and a rag. The cleaning assembly shall be pulled through conduit a minimum of 2 times or until less than a volume of 8 cubic inches of debris is expelled from the duct.

3.3.3 Duct Lubrication

The cable lubricant shall be compatible with the cable jacket for cable that is being installed. Application of lubricant shall be in accordance with lubricant manufacturer's recommendations.

3.3.4 Cable Installation

The Contractor shall provide a cable feeding truck and a cable pulling winch as required. The Contractor shall provide a pulling grip or pulling eye in accordance with cable manufacturer's recommendations. The pulling grip or pulling eye apparatus shall be attached to polypropylene or manilla rope followed by lubricant front end packs and then by power cables. A

dynamometer shall be used to monitor pulling tension. Pulling tension shall not exceed cable manufacturer's recommendations. The Contractor shall not allow cables to cross over while cables are being fed into duct. For cable installation in cold weather, cables shall be kept at 50 degrees F temperature for at least 24 hours before installation.

3.3.5 Cable Installation Plan

The Contractor shall submit a cable installation plan for all cable pulls in accordance with the detail drawings portion of paragraph SUBMITTALS. Cable installation plan shall include:

a. Site layout drawing with cable pulls identified in numeric order of expected pulling sequence and direction of cable pull.

b. List of cable installation equipment.

c. Lubricant manufacturer's application instructions.

d. Procedure for resealing cable ends to prevent moisture from entering cable.

e. Cable pulling tension calculations of all cable pulls.

f. Cable percentage conduit fill.

g. Cable sidewall thrust pressure.

h. Cable minimum bend radius and minimum diameter of pulling wheels used.

i. Cable jam ratio.

j. Maximum allowable pulling tension on each different type and size of conductor.

k. Maximum allowable pulling tension on pulling device.

3.3.6 Duct Line

Low-voltage cables shall be installed in duct lines as indicated. Cable splices in low-voltage cables shall be made in handholes and pullboxes only.

3.4 DUCT LINES

3.4.1 Requirements

Numbers and sizes of ducts shall be as indicated. Duct lines shall be laid with a minimum slope of 4 inches per 100 feet. Depending on the contour of the finished grade, the high-point may be at a terminal , or a pullbox or

between pullboxes. Short-radius manufactured 90-degree duct bends may be used only for pole or equipment risers, unless specifically indicated as acceptable. The minimum manufactured bend radius shall be 18 inches for ducts of less than 3 inch diameter, and 36 inches for ducts 3 inches or greater in diameter. Otherwise, long sweep bends having a minimum radius of 25 feet shall be used for a change of direction of more than 5 degrees, either horizontally or vertically. Both curved and straight sections may be used to form long sweep bends, but the maximum curve used shall be 30 degrees and manufactured bends shall be used. Ducts shall be provided with end bells whenever duct lines terminate in manholes or handholes.

3.4.2 Treatment

Ducts shall be kept clean of concrete, dirt, or foreign substances during construction. Field cuts requiring tapers shall be made with proper tools and match factory tapers. A coupling recommended by the duct manufacturer shall be used whenever an existing duct is connected to a duct of different material or shape. Ducts shall be stored to avoid warping and deterioration with ends sufficiently plugged to prevent entry of any water or solid substances. Ducts shall be thoroughly cleaned before being laid. Plastic ducts shall be stored on a flat surface and protected from the direct rays of the sun.

3.4.3 Concrete Encasement

Ducts requiring concrete encasements shall comply with NFPA 70, except that electrical duct bank configurations for ducts 6 inches in diameter shall be determined by calculation and as shown on the drawings. The separation between adjacent electric power and communication ducts shall conform to IEEE C2. Duct line encasements shall be monolithic construction. Where a connection is made to a previously poured encasement, the new encasement shall be well bonded or doweled to the existing encasement. The Contractor shall submit proposed bonding method for approval in accordance with the detail drawing portion of paragraph SUBMITTALS. At any point, except railroad and airfield crossings, tops of concrete encasements shall be not less than the cover requirements listed in NFPA 70. Where ducts are jacked under existing pavement, rigid steel conduit will be installed because of its strength. To protect the corrosion-resistant conduit coating, predrilling or installing conduit inside a larger iron pipe sleeve (jack-and-sleeve) is required. Separators or spacing blocks shall be made of steel, concrete, plastic, or a combination of these materials placed not farther apart than 4 feet on centers. Ducts shall be securely anchored to prevent movement during the placement of concrete and joints shall be staggered at least 6 inches vertically.

3.4.4 Nonencased Direct-Burial

Top of duct lines shall be below the frost line depth but not less than 30 inches below finished grade and shall be installed with a minimum of 3 inches of earth around each duct, except that between adjacent electric power and communication ducts, 12 inches of earth is required. Bottoms of trenches shall be graded toward manholes or handholes and shall be smooth and free of stones, soft spots, and sharp objects. Where bottoms of trenches comprise materials other than sand, a 3 inch layer of sand shall

be laid first and compacted to approximate densities of surrounding firm soil before installing ducts. Joints in adjacent tiers of duct shall be vertically staggered at least 6 inches. The first 6 inch layer of backfill cover shall be sand compacted as previously specified. The rest of the excavation shall be backfilled and compacted in3 to 6 inch layers. Duct banks may be held in alignment with earth. However, high-tiered banks shall use a wooden frame or equivalent form to hold ducts in alignment prior to backfilling.

3.4.5 Installation of Couplings

Joints in each type of duct shall be made up in accordance with the manufacturer's recommendations for the particular type of duct and coupling selected and as approved.

3.4.5.1 Plastic Duct

Duct joints shall be made by brushing a plastic solvent cement on insides of plastic coupling fittings and on outsides of duct ends. Each duct and fitting shall then be slipped together with a quick 1/4-turn twist to set the joint tightly.

3.4.6 Duct Line Markers

Duct line markers shall be provided at the ends of long duct line stubouts or for other ducts whose locations are indeterminate because of duct curvature or terminations at completely below-grade structures. In addition to markers, a 5 mil brightly colored plastic tape, not less than 3 inches in width and suitably inscribed at not more than 10 feet on centers with a continuous metallic backing and a corrosion-resistant 1 mil metallic foil core to permit easy location of the duct line, shall be placed approximately 12 inches below finished grade levels of such lines.

3.5 PULLBOXES

3.5.1 Pullboxes

Pullbox tops shall be flush with sidewalks or curbs or placed 1/2 inchabove surrounding grades when remote from curbed roadways or sidewalks. Covers shall be marked "Low-Voltage" and provided with 2 lifting eyes and 2 hold-down bolts. Each box shall have a suitable opening for a ground rod. Conduit, cable, ground rod entrances, and unused openings shall be sealed with mortar.

3.6 ILLUMINATION

3.6.1 Site Lighting Luminaires

Luminaires, ballasts, lamps, and control devices required for general area

lighting shall be in accordance with the drawings and as described herein. Heads shall be internally wired and rated 600 volts.

3.6.2 Control

Connect luminaires as indicated on plans.

3.6.3 Site lighting Poles

Aluminum poles and aluminum brackets for site lighting shall have a dark duranodic bronze finish to match fixtures as indicated and shall not be painted. Poles shall be as specified. Poles shall be suitable for use with underground supply conductors. Poles shall be designed for a wind velocity of 100 mph at the base of the pole, for a wind gust factor of 1.3, and for the height and drag factors recommended by AASHTO LTS?2. The effective projected area of luminaires and other pole mounted devices shall be taken into account in pole design. Poles shall have grounding provisions. Bases shall be of the anchor bolt mounted type. The type of pole shaft material provided shall not be mixed on any project.

3.6.4 Pole Setting

Poles shall be mounted on cast in place or power installed screw foundations. Conduit ells shall be provided for cable entrances into pole interiors.

a. Cast In Place Foundations: Concrete foundations, sized as indicated, shall have anchor bolts accurately set in foundations using templates supplied by the pole manufacturer. After the concrete has cured, pole anchor bases shall be set on foundations and leveled by shimming between anchor bases and foundations or by setting anchor bases on leveling nuts and grouting. Poles shall be set plumb. Anchor bolts shall be the manufacturers' standard, and not less than necessary to meet the pole wind loading specified herein and other design requirements.

b. Power-Installed Screw Foundations: Power-installed screw foundations having the required strength and mounting bolt, top plate dimensions may be utilized. Screw foundations shall be of at least 1/4 inch thick structural steel conforming to ASTM A 36 and hot?dip galvanized in accordance with ASTM A 123. Conduit slots in screw foundation shafts shall be approximately 18 inches below tops of shafts on opposite sides and top plates shall be marked to indicate orientation. Design calculations indicating adequate strength shall be approved before installation of any screw foundation is permitted.

3.6.5 LIGHTING CONTACTOR

NEMA ICS 2, mechanically held contactor in accordance with NEMA ICS 2.

Contacts shall be rated 300 volts, 30 amperes, and 10 poles. Coils shall be rated 120 volts. Contactor shall have silver alloy double-break contacts and coil clearing contacts for mechanically held contactor and shall require no arcing contacts. Provide contactor with hand-off-automatic selector switch. Contactor shall be mounted in the lighting cabinet.

3.6.6 TIME SWITCH

Astronomic dial type or electronic type, arranged to turn "ON" at sunset, and turn "OFF" at predetermined time between 8:30 p.m. and 2:30 a.m. or sunrise, automatically changing the settings each day in accordance with seasonal changes of sunset and sunrise. Provide switch rated 120 volts, having automatically wound spring mechanism or capacitor, to maintain accurate time for a minimum of 7 hours following power failure. Provide time switch with a manual on-off bypass switch. Time switch shall be mounted in the lighting cabinet.

3.6.7 PHOTOCELL SWITCH

UL 773 or UL 773A, hermetically sealed cadmium-sulfide or silicon diode type cell rated 277 volts ac, 60 Hz with single-throw contacts or single pole double-throw (spdt) contacts for mechanically held contactors rated 1000 watts designed to fail to the ON position. Switch shall turn on at or below 3 footcandles and off at 2 to 10 footcandles. A time delay shall prevent accidental switching from transient light sources. Provide a directional lens in front of the cell to prevent fixed light sources from creating a turnoff condition only for the switch mounted on the lighting cabinet. Provide a cast weatherproof aluminum housing with adjustable window slide, rated 1800 VA, minimum. for switch mounted on the lighting cabinet. For fixtures provide integral t the fixture rated 1800VA, minimum.

3.7 PAD-MOUNTED EQUIPMENT INSTALLATION

Pad-mounted equipment , shall be furnished & installed on concrete pads by KCPL

3.7.1 Concrete Pads

3.7.1.1 Construction

Concrete pads for pad-mounted electrical equipment may be either pre-fabricated or poured-in-place. Pads shall be constructed as indicated. Tops of concrete pads shall be level and shall project 4 inches above finished paving or grade and sloped to drain. Edges of concrete pads shall have 3/4 inch chamfer. Conduits for primary, secondary, and grounding conductors shall be set in place prior to placement of concrete pads. Where grounding electrode conductors are installed through concrete pads, PVC conduit sleeves shall be installed through the concrete to provide physical protection.

3.7.1.2 Concrete and Reinforcement

Concrete work shall have minimum 3000 psi compressive strength.Concrete pads shall be constructed as indicated. Tops of concrete pads shall be level and shall project 4 inches above finished paving or grade and sloped to drain. Conduits for secondary and grounding conductors shall be set in place prior to pouring of concrete pads.

3.7.1.3 Sealing

When the installation is complete, the Contractor shall seal all conduit and other entries into the equipment enclosure with an approved sealing compound. Seals shall be of sufficient strength and durability to protect all energized live parts of the equipment from rodents, insects, or other foreign matter.

3.7.2 Padlocks

Padlocks shall be provided for pad-mounted equipment. Padlocks shall be keyed as directed by the Contracting Officer.

3.8 CONNECTIONS BETWEEN AERIAL AND UNDERGROUND SYSTEMS

Connections between aerial and underground systems shall be made as shown.

3.9 GROUNDING

3.9.1 Grounding Electrodes

Grounding electrodes shall be installed as shown on the drawings and as follows:

a. Driven rod electrodes - Unless otherwise indicated, ground rods shall be driven into the earth until the tops of the rods are approximately 1 foot below finished grade.

c. Ground Ring - A ground ring shall be installed as shown.

d. Additional electrodes - When the required ground resistance is not met, additional electrodes shall be provided interconnected with grounding conductors to achieve the specified ground resistance. The additional electrodes will be up to three, rods spaced a minimum of 10 feet apart] . In high ground resistance, UL listed chemically charged ground rods may be used. If the resultant resistance exceeds 25 ohms measured not less than 48 hours after rainfall, the Contracting Officer shall be notified immediately.

3.9.2 Grounding and Bonding Connections

Connections above grade shall be made by the fusion-welding process or with bolted solderless connectors, in compliance with UL 467, and those below grade shall be made by a fusion-welding process. Where grounding conductors are connected to aluminum-composition conductors, specially treated or lined copper-to-aluminum connectors suitable for this purpose shall be used.

3.9.3 Grounding and Bonding Conductors

Grounding and bonding conductors include conductors used to bond transformer enclosures and equipment frames to the grounding electrode system. Grounding and bonding conductors shall be sized as shown, and located to provide maximum physical protection. Bends greater than 45 degrees in ground conductors are not permitted. Routing of ground conductors through concrete shall be avoided. When concrete penetration is necessary, nonmetallic conduit shall be cast flush with the points of concrete entrance and exit so as to provide an opening for the ground conductor, and the opening shall be sealed with a suitable compound after installation.

3.10 Pull Wires

A pull wire shall be inserted in each empty raceway. The pull wire shall be of No. 14 AWG zinc-coated steel, or of plastic having not less than 200 pounds per square inch tensile strength. Not less than 10 inches of slack shall be left at each end of the pull wire.

3.11 FIELD TESTING

3.11.1 General

Field testing shall be performed in the presence of the Contracting Officer. The Contractor shall notify the Contracting Officer 30 days prior to conducting tests. The Contractor shall furnish all materials, labor, and equipment necessary to conduct field tests. The Contractor shall perform all tests and inspections recommended by the manufacturer unless specifically waived by the Contracting Officer. The Contractor shall maintain a written record of all tests which includes date, test performed, personnel involved, devices tested, serial number and name of test equipment, and test results. Field test reports shall be signed and dated by the Contractor.

3.11.2 Safety

The Contractor shall provide and use safety devices such as rubber gloves, protective barriers, and danger signs to protect and warn personnel in the test vicinity. The Contractor shall replace any devices or equipment which are damaged due to improper test procedures or handling.

3.11.3 Ground-Resistance Tests

The resistance of each grounding electrode system] shall be measured using

the fall-of-potential method defined in IEEE Std 81. Ground resistance measurements shall be made before the electrical distribution system is energized and shall be made in normally dry conditions not less than 48 hours after the last rainfall. Resistance measurements of separate grounding electrode systems shall be made before the systems are bonded together below grade. The combined resistance of separate systems may be used to meet the required resistance, but the specified number of electrodes must still be provided.

a. Single rod electrode - 25 ohms.

b. Multiple rod electrodes - ohms.

d. Ground ring - 25 ohms.

3.11.4 Low-Voltage Cable Test

Low-voltage cable, complete with splices, shall be tested for insulation resistance after the cables are installed, in their final configuration, ready for connection to the equipment, and prior to energization. The test voltage shall be 500 volts dc, applied for one minute between each conductor and ground and between all possible combinations conductors in the same trench, duct, or cable, with all other conductors in the same trench, duct, or conduit. The minimum value of insulation shall be:

R in megohms = (rated voltage in kV + 1) x 1000/(length of cable in feet

Each cable failing this test shall be repaired or replaced. The repaired cable shall be retested until failures have been eliminated.

3.11.5 Circuit Breaker Tests

The following field tests shall be performed on circuit breakers. Pass-fail criteria shall be in accordance with the circuit breaker manufacturer's specifications.

a. Insulation resistance test phase-to-phase.

b. Insulation resistance test phase-to-ground.

c. Closed breaker contact resistance test.

d. Power factor test.

e. High-potential test.

f. Manualoperation of the breaker.

3.11.6 Pre-Energization

Calibration, testing, adjustment, and placing into service of the installation shall be accomplished for the equipment listed below. The equipment shall be inspected to ensure that installation is in compliance with the recommendations of the manufacturer and as shown on the detail drawings. Terminations of conductors at major equipment shall be inspected to ensure the adequacy of connections. Bare and insulated conductors between such terminations shall be inspected to detect possible damage during installation. Components shall be inspected for damage caused during installation or shipment to ensure packaging materials have been removed. Components capable of being both manually and electrically operated shall be operated manually prior to the first electrical operation. Components capable of being calibrated, adjusted, and tested shall be calibrated, adjusted, and tested in accordance with the instructions of the equipment manufacturer.

a. Panelboard HA

b. Lighting Cabinet LC

3.11.7 Operating Tests

After the installation is completed, and at such times as the Contracting Officer may direct, the Contractor shall conduct operating tests for approval. The equipment shall be demonstrated to operate in accordance with the requirements herein. An operating test report shall be submitted in accordance with paragraph SUBMITTALS.

3.12 ONSITE TRAINING

The Contractor shall conduct a training course for the operating staff as designated by the Contracting Officer. The training period shall consist of a total of 4 hours of normal working time and shall start after the system is functionally completed but prior to final acceptance tests. The course instruction shall cover pertinent points involved in operating, starting, stopping, and servicing the equipment, as well as all major elements of the operation and maintenance manuals. Additionally, the course instructions shall demonstrate all routine maintenance operations.

3.13 ACCEPTANCE

Final acceptance of the facility will not be given until the Contractor has successfully completed all tests and after all defects in installation, material or operation have been corrected.

-- End of Section --