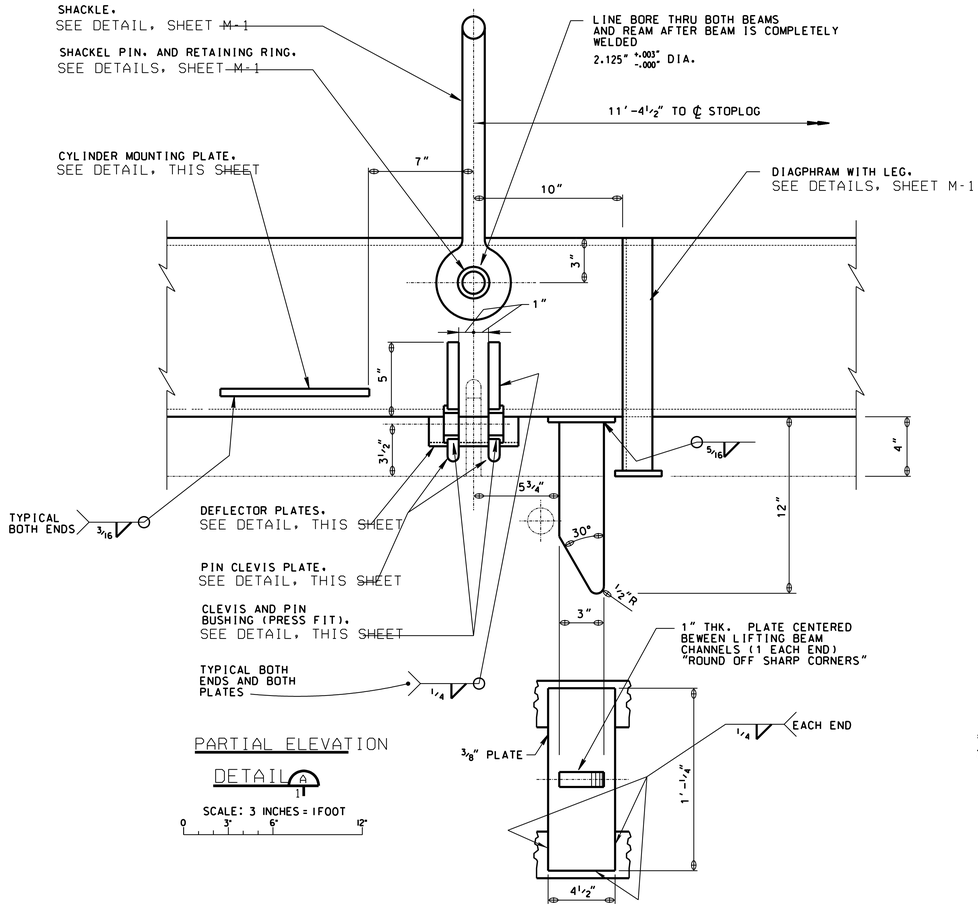

PARTIAL ELEVATION

DETAIL A

SCALE: 3 INCHES = 1FOOT

0 3" 6" 12"

AUXILLIARY BOTTOM VIEW

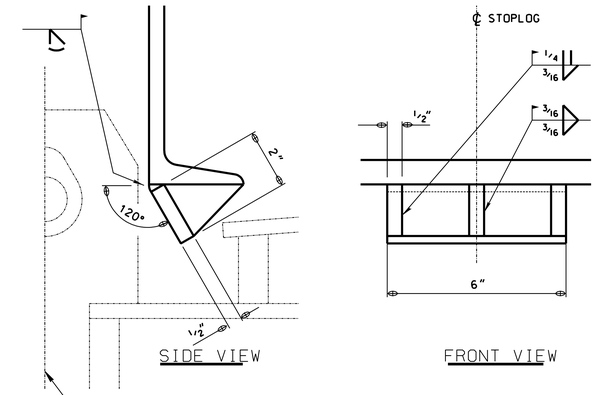

DEFLECTOR PLATES

SCALE: 6 INCHES = 1 FOOT

0 1" 2" 3" 6"

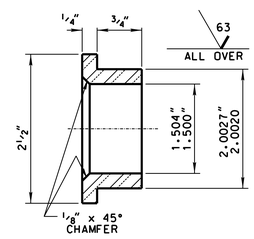

CLEVIS AND PIN BUSHING

MAKE: 4

MATERIAL: BRONZE

SCALE: 12 INCHES = 1 FOOT

0 1" 2" 3"

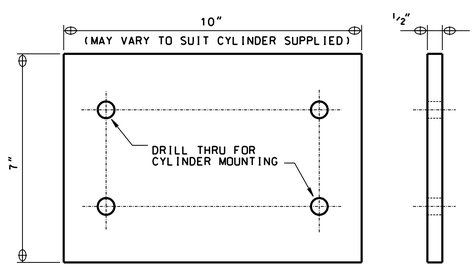

CYLINDER MOUNTING PLATE

MAKE: 2

MATERIAL: STRUCTURAL STEEL

SCALE: 6 INCHES = 1 FOOT

0 1" 2" 3" 6"

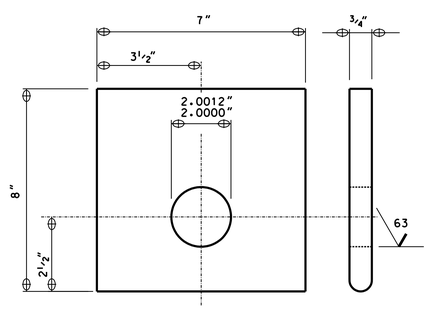

PIN CLEVIS PLATE

MAKE: 4

MATERIAL: STRUCTURAL STEEL

SCALE: 6 INCHES = 1 FOOT

Symbol	Description	Date	Approved

Revisions

Prepared by: U.S. ARMY ENGINEER DISTRICT CORPS OF ENGINEERS OMAHA, NEBRASKA

U.S. ARMY ENGINEER DISTRICT CORPS OF ENGINEERS KANSAS CITY, MISSOURI

Designed by: T.L.H.

Drawn by: K.E.M.

Checked by: K.E.M.

Submitted by:

OSAGE RIVER
HARRY S. TRUMAN DAM AND RESERVOIR
POWERHOUSE
SPILLWAY STOPLOG LIFTING BEAM
DETAILS
PLANS, SECTIONS, AND DETAILS

Scale: AS SHOWN

Date: JULY 1994

Sheet number: M-3

Plot Scale Ratio: .333 : 1

Computer File: HST12MB3.DGN

File No.