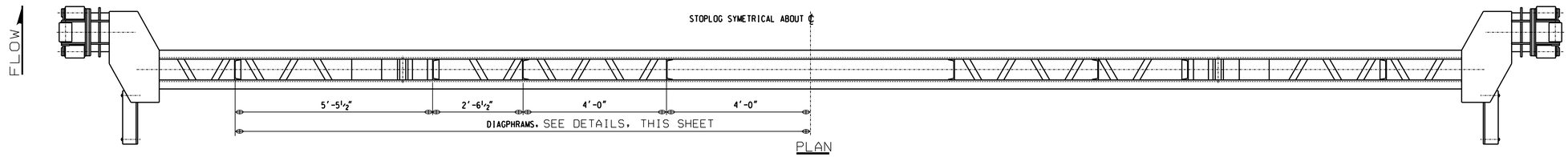

PLAN

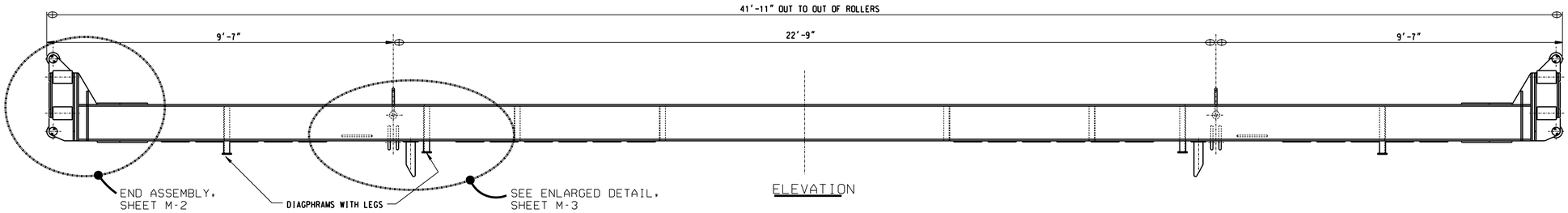

ELEVATION

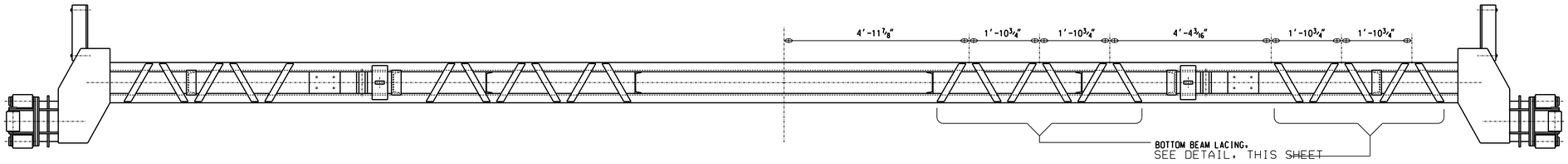

BOTTOM VIEW

SPILLWAY STOPLOG LIFTING BEAM

MAKE: 1
MATERIAL: STRUCTURAL STEEL

SCALE: ¾ INCH = 1FOOT
12" 6" 0 1' 2'

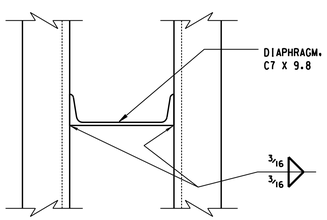

PLAN

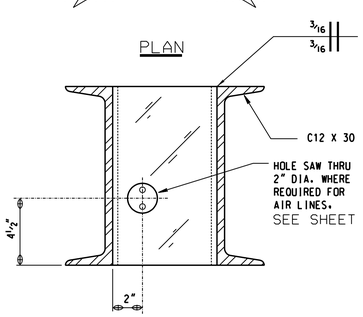

SECTION

STANDARD DIAPHRAGM

SCALE: 3 INCHES = 1 FOOT
0 3" 6" 12"

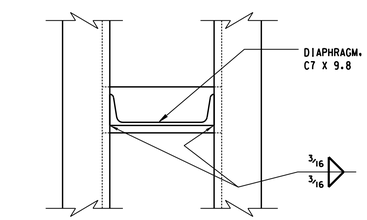

PLAN

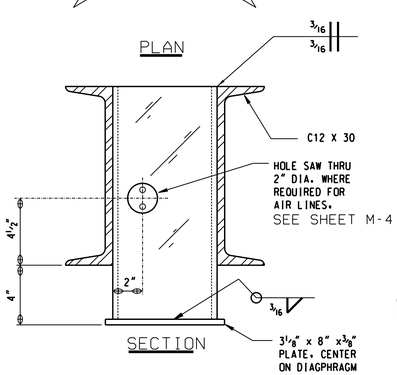

SECTION

DIAPHRAGM WITH LEG

SCALE: 3 INCHES = 1 FOOT

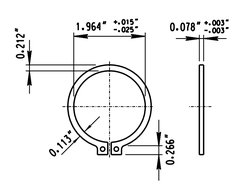

RETAINING RING

MAKE: 2
MATERIAL: STAINLESS STEEL
NO SCALE

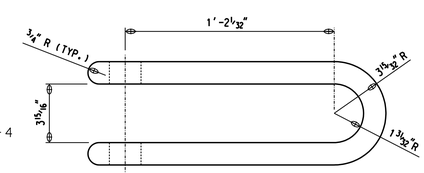

PLAN

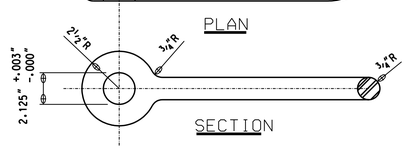

SECTION

SHACKLE DETAILS

MAKE: 2
MATERIAL: FORGED STEEL
SCALE: 3 INCHES = 1 FOOT

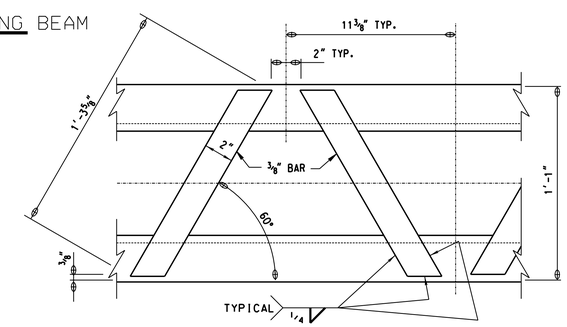

TYPICAL BOTTOM BEAM LACING

SCALE: 3 INCHES = 1 FOOT
0 3" 6" 12"

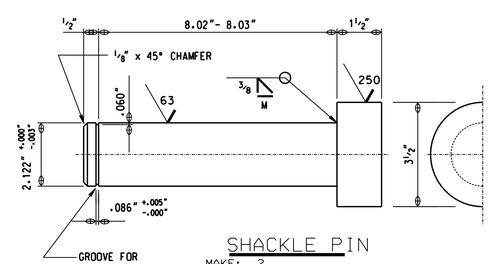

SHACKLE PIN

MAKE: 2
MATERIAL:
STAINLESS STEEL CONFORMING TO ASTM A276 TYPE 410 WITH MINIMUM TENSILE STRENGTH 100,000 PSI AND MINIMUM YIELD POINT OF 80,000 PSI

NOTES:

1. THE AIR ACTUATED PIN SYSTEM IS NOT SHOWN ON THIS SHEET. SEE SHEET M-4 FOR DETAILS AND INSTALLATION.

Symbol	Description	Date	Approved
	Revisions		

Prepared by: U.S. ARMY ENGINEER DISTRICT CORPS OF ENGINEERS OMAHA, NEBRASKA	U.S. ARMY ENGINEER DISTRICT CORPS OF ENGINEERS KANSAS CITY, MISSOURI
Designed by: T.L.H.	OSAGE RIVER HARRY S. TRUMAN DAM AND RESERVOIR POWERHOUSE SPILLWAY STOPLOG LIFTING BEAM STRUCTURAL ASSEMBLY PLANS, SECTIONS, AND DETAILS
Drawn by: K.E.M.	
Checked by: S.G.E.	
Submitted by:	Scale: AS SHOWN; Date: JULY 1994; Sheet number: M-1; Plot Scale Ratio: 1.333 : 1; Computer File: HST12MB1.DGN; File No.