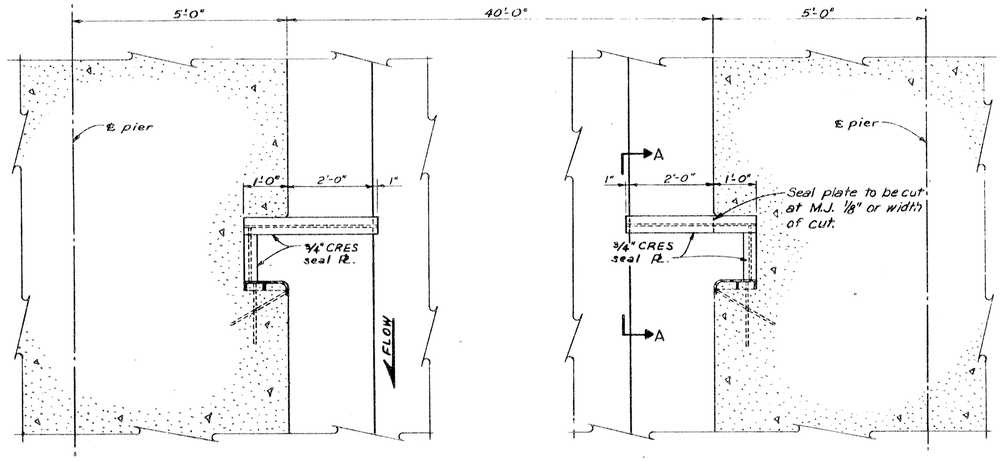

HORIZONTAL SECTION THRU BULKHEAD SLOT
Scale: 3/4" = 1'-0"

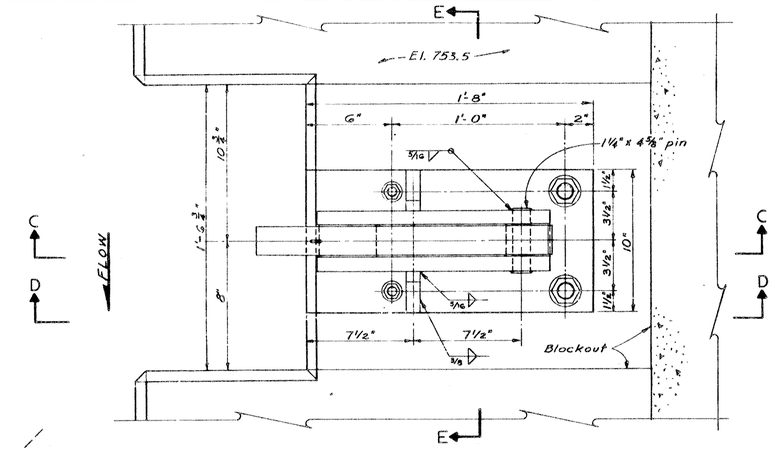

PLAN
Scale: 3" = 1'-0"

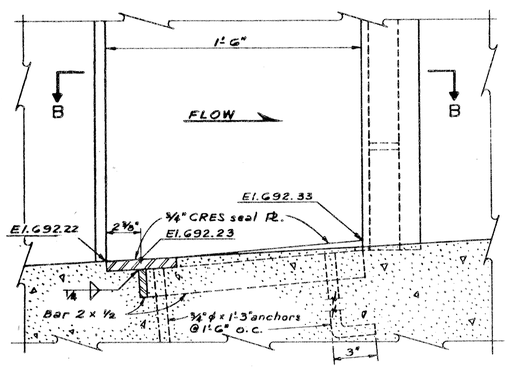

SECTION A
Scale: 3" = 1'-0"

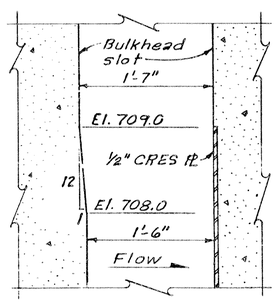

DETAIL SHOWNING WIDTH CHANGE IN BULKHEAD SLOT (A)
Scale: 1 1/2" = 1'-0"

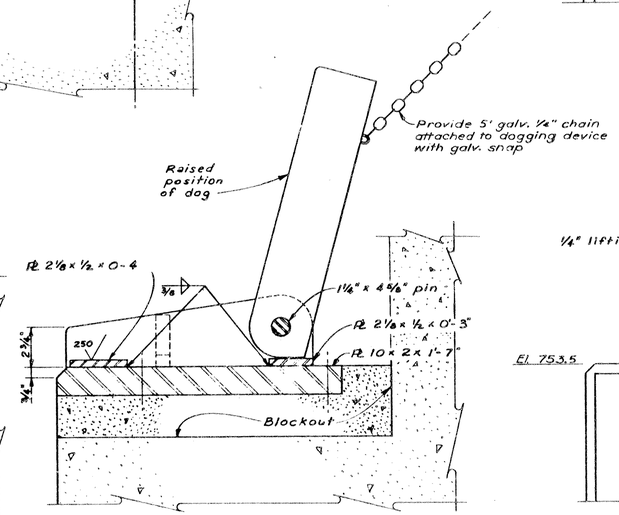

SECTION C

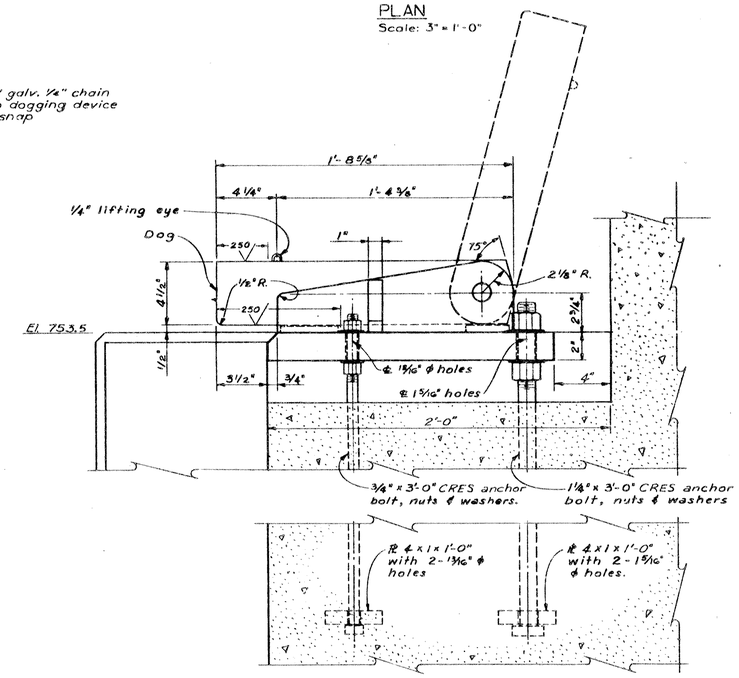

SECTION D

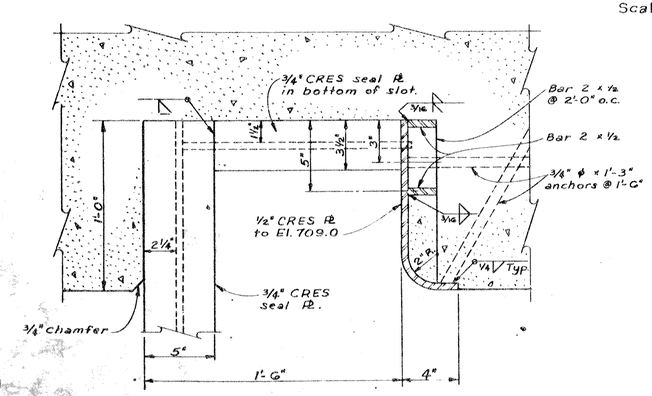

SECTION B
Scale: 3" = 1'-0"

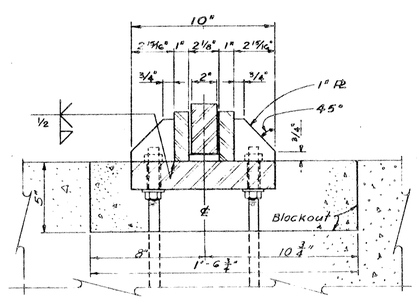

SECTION E

BULKHEAD DOGGING DEVICE
(2 REQ'D)
Scale: 3" = 1'-0"

Note:
CRES = corrosion-resisting steel.

REFERENCE DWGS.
Spillway Bulkhead Storage Slot ... G13

RECORD DRAWING
JANUARY 1974
CONTRACT NO. DACW41-71-C-0043

SYM.	DESCRIPTION	DATE	APPD.
	Revised for "As Built" conditions	9/12/83	[illegible]
(A)	Revised bulkhead slot		[illegible]

REVISIONS

OSAGE RIVER BASIN
KAYSINGER BLUFF RESERVOIR
STAGE III CONSTRUCTION

SPILLWAY
BULKHEAD SLOT DETAILS

Dwg. No. G34
CORPS OF ENGINEERS
KANSAS CITY DISTRICT

Submitted: CHIEF, RESERVOIR STRUCTS. SECT.
Recommended: CHIEF, DESIGN BRANCH
Approved: CHIEF, ENGINEERING DIVISION

DESIGNED BY: M.E.G. DRAWN BY: K.E.F. CHECKED BY: M.D.J.

Scale: as shown
U. S. ARMY
AUGUST 1970
9-12-83

O. & M. M. PLATE NO. 224