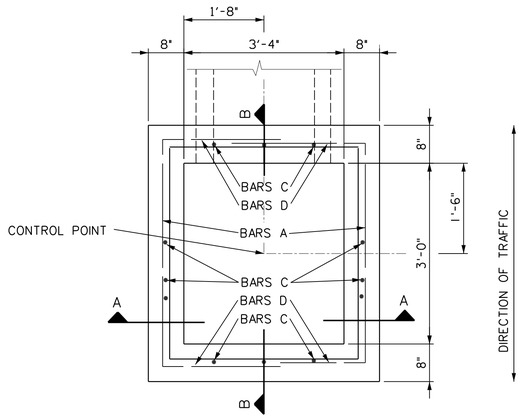

PLAN
NOT TO SCALE

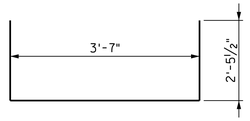

BARS A

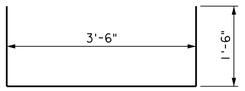

BARS B-1 & B-2

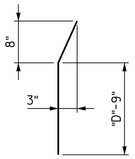

BARS C

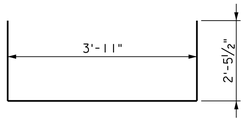

BARS D

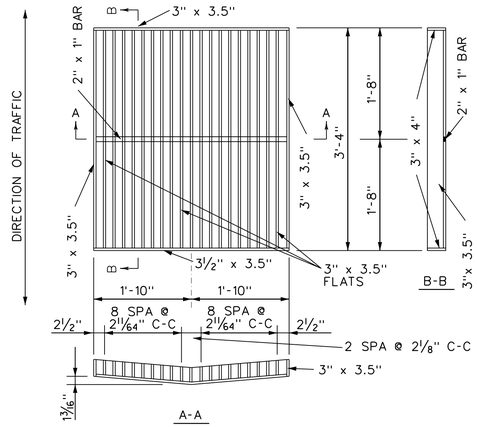

GRATE DETAIL
NOT TO SCALE

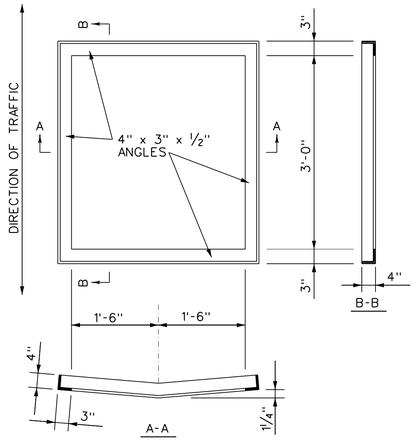

FRAME DETAIL
NOT TO SCALE

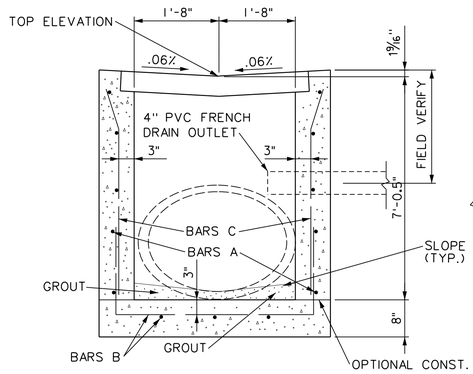

SECTION A-A
NOT TO SCALE

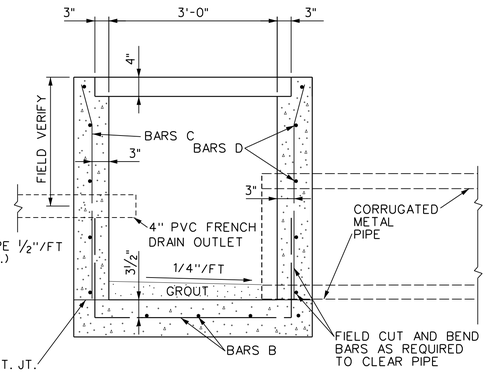

SECTION B-B
NOT TO SCALE

CATCH BASIN INLET
NOT TO SCALE

NOTES:

1. ALL CONCRETE SHALL BE AS SPECIFIED IN SPECIFICATION SECTION 03307A.
2. ALL REINFORCING STEEL SHALL BE NO. 4 BARS. DIMENSIONS RELATING TO STEEL ARE TO CENTERS OF BARS. FIELD CUT AND BEND BARS AS REQUIRED TO CLEAR PIPES.
3. GRATE AND FRAME SHALL CONFORM TO ASTM A 36/A 36M, AND SHALL CONTAIN A MINIMUM OF 0.2% COPPER.
4. INLET SHALL BE ALIGNED SO THAT GRATE VANES ARE PARALLEL TO DIRECTION OF TRAFFIC.

US Army Corps of Engineers
Kansas City District

Symbol	Description	Date	Appr.

Designed by: H.T.Y.
Dwn by: H.T.Y.
Ckd by: J.M.S.
Reviewed by:
Submitted by: D.L.M.
Date: APRIL 2004
Rev.
Design file no. E-1-1673
Drawing code:
File name: WWC025.DGN
Plot date:
Plot scale: 4:0:1

U.S. ARMY ENGINEER DISTRICT
CORPS OF ENGINEERS
KANSAS CITY, MISSOURI

SALINE RIVER, KANSAS
WILSON LAKE
STILLING BASIN WALL REPAIR

CATCH BASIN DETAILS

Sheet reference number:
C-22