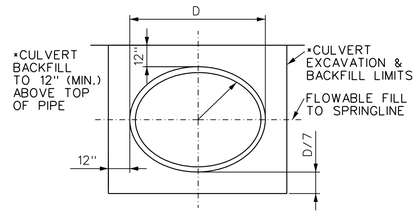

DETAILS OF CULVERT PIPE EXCAVATION AND BACKFILL

NOT TO SCALE

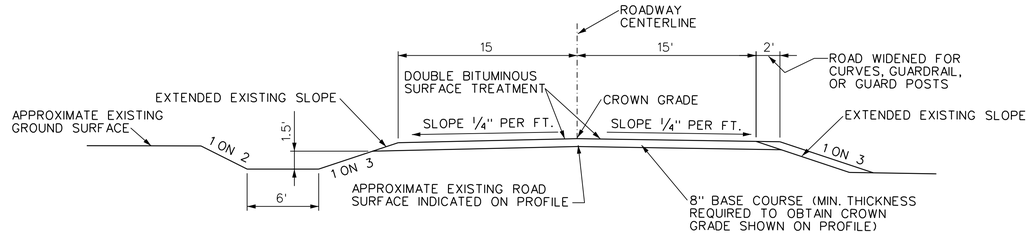

CROSS SECTION - EXISTING SERVICE ROAD "A"

NOT TO SCALE

SEE NOTE 1.

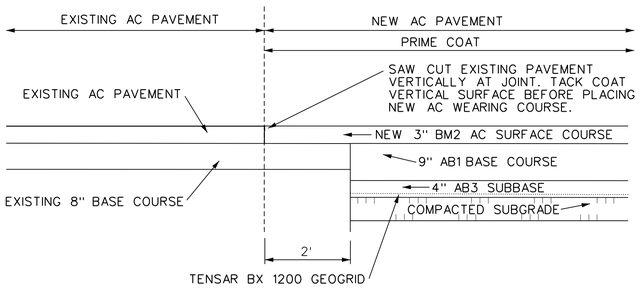

PAVEMENT JOINING DETAIL

NOT TO SCALE

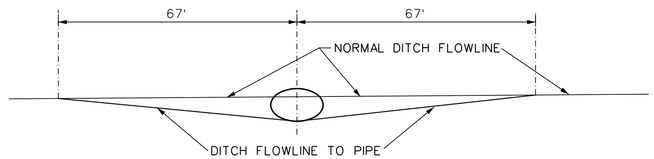

TYPICAL EXISTING DITCH TO CULVERT PIPE DETAIL

NOT TO SCALE

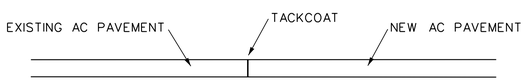

PAVEMENT JOINING DETAIL

NOT TO SCALE

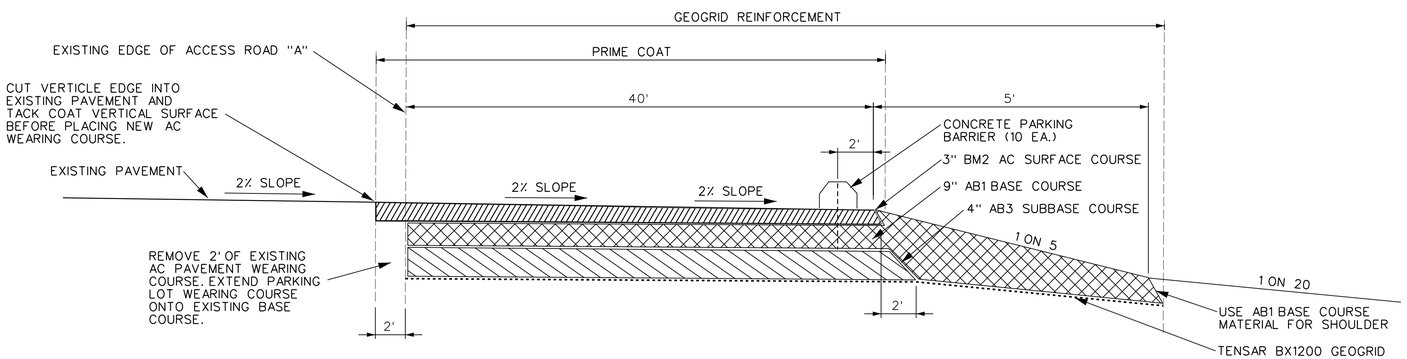

NOTE:

1. TRANSITION DITCH FLOWLINE IN 100' TO INVERT OR OUTLET ELEVATION.

PARKING LOT CROSS SECTION

NOT TO SCALE

NOTES:

1. ROADWAY HAS BEEN OVERLAYED AND CHIP SEALED SEVERAL TIMES SINCE ORIGINAL CONSTRUCTION. ORIGINAL CONDITIONS ARE AS SHOWN ON DRAWING.
2. COMPACT FILL MATERIAL TO FULL DERTH.

US Army Corps of Engineers
Kansas City District

Symbol	Description	Date	Appr.

Designed by: H.T.Y.
Date: APRIL 2004
Rev.
Dwn by: H.T.Y.
Ckd by: R.S.K.
Design file no. E-1-1672
Drawing code:
Reviewed by:
File name: WWCO21DGN
Plot date:
Plot scale: 20:1
Submitted by: D.L.M.

U.S. ARMY ENGINEER DISTRICT
CORPS OF ENGINEERS
KANSAS CITY, MISSOURI

SALINE RIVER, KANSAS
WILSON LAKE
STILLING BASIN WALL REPAIR

PARKING LOT AND ACCESS ROAD "A" DETAILS

Sheet reference number:
C-21