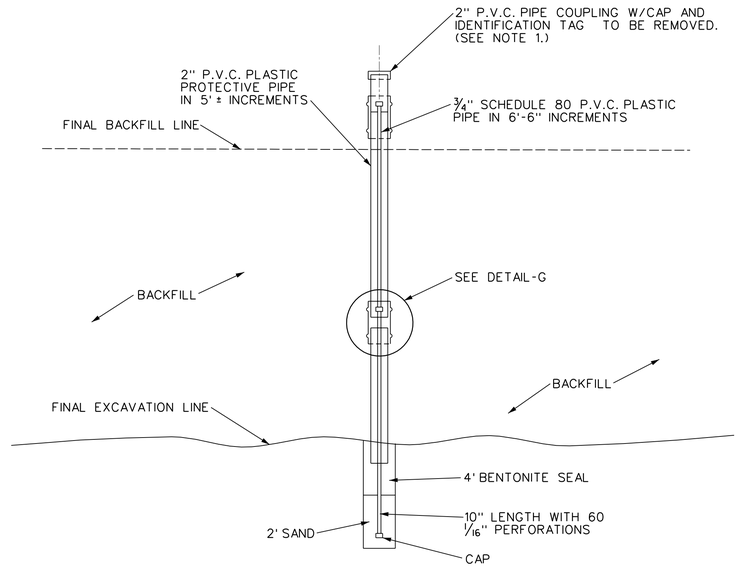

OPEN TUBE PIEZOMETER DETAIL-A

NOT TO SCALE

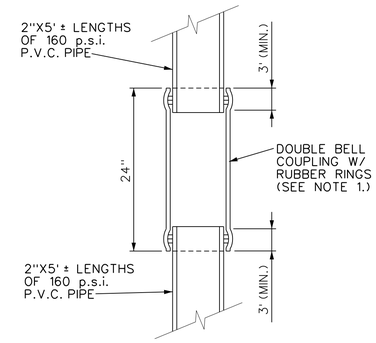

PROTECTIVE PIPE COUPLING DETAIL-G

NOT TO SCALE

NOTES:

1. SALVAGE ITEMS AND TURN IN TO PROJECT OFFICE FOR REUSE.
2. REMOVE INSTRUMENTATION DESIGNATED TO BE REMOVED TO 1' BELOW FINAL EXCAVATION GRADE. GROUT REMAINING CASING TO FULL DEPTH.

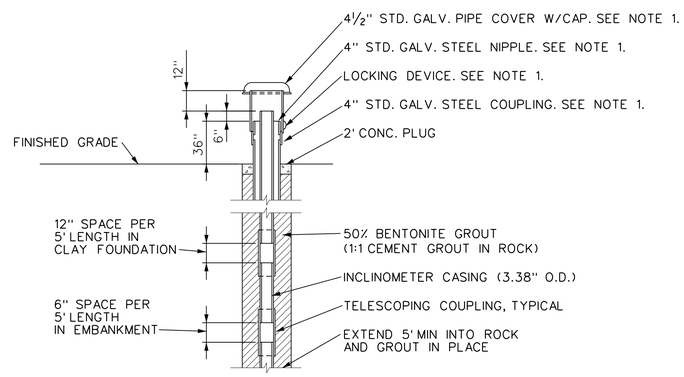

INCLINOMETER CASING WITH SETTLEMENT COUPLINGS AND PROTECTIVE CAP

(INSTALLED BY GOVERNMENT)
NOT TO SCALE

INSTRUMENTATION REMOVAL AND SALVAGE DETAILS

US Army Corps of Engineers
Kansas City District

Symbol	Description	Date	Appr.

Designed by: H.T.Y.
Date: APRIL 2004
Rev.
Dwn by: H.T.Y.
Ckd by: R.S.K.
Design file no. E-1-1670
Reviewed by:
Drawing code:
Submitted by: D.L.M.
File name: WWC019.DGN
Plot date:
Plot scale: 10:1

U.S. ARMY ENGINEER DISTRICT
CORPS OF ENGINEERS
KANSAS CITY, MISSOURI

SALINE RIVER, KANSAS
WILSON LAKE
STILLING BASIN WALL REPAIR

INSTRUMENTATION REMOVAL AND SALVAGE DETAILS

Sheet reference number:
C-19