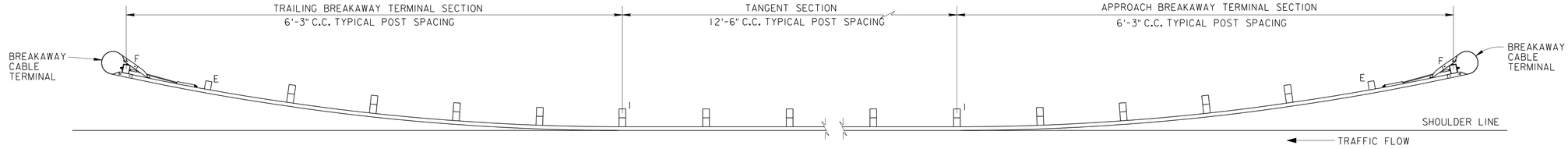

PLAN

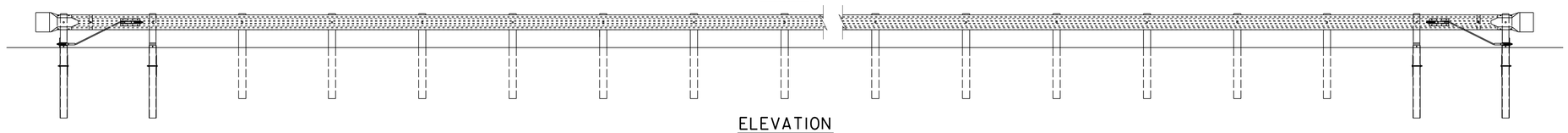

ELEVATION
TYPICAL GUARDRAIL LAYOUT DETAIL
NO SCALE

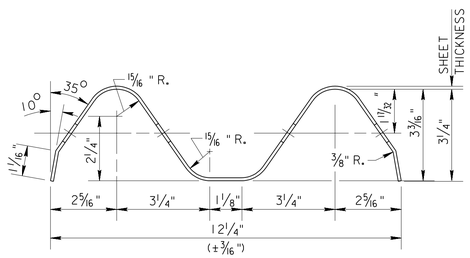

SECTION THRU SAFETY BEAM GUARDRAIL
NO SCALE

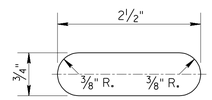

POST BOLT SLOT
NO SCALE

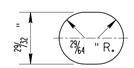

SPLICE BOLT SLOT
NO SCALE

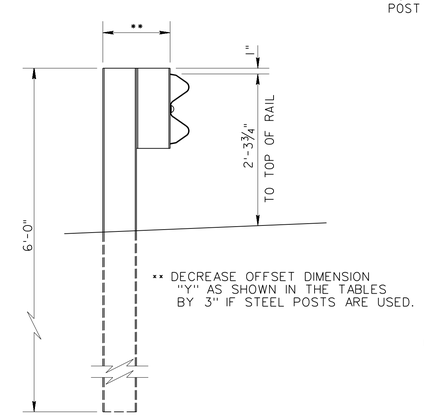

ALTERNATE STEEL "H" BEAM
NO SCALE

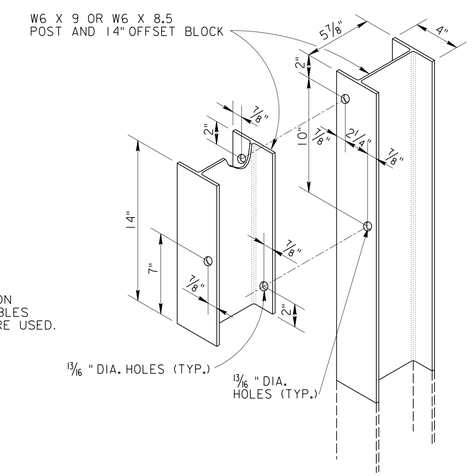

ALTERNATE STEEL "H" BEAM POST & OFFSET BLOCK
NO SCALE

NOTES:

1. OFFSET BLOCK SHALL BE ATTACHED TO POST WITH TWO 5/8" HEX HEAD BOLTS.
2. PROVIDE REFLECTOR TABS AT FIRST POST AND EVERY 4TH POST THERE AFTER.

GUARDRAIL POST DETAILS
NO SCALE

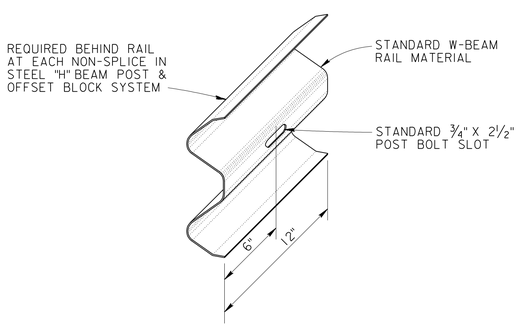

BACK-UP PLATE
NO SCALE

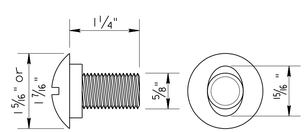

SPLICE BOLT
NO SCALE

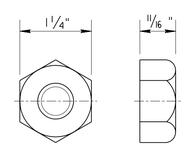

NUT
NO SCALE

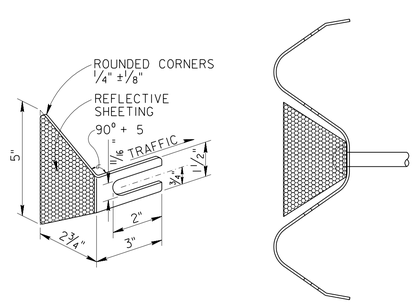

MOUNTING POSITION
REFLECTOR TAB DETAILS

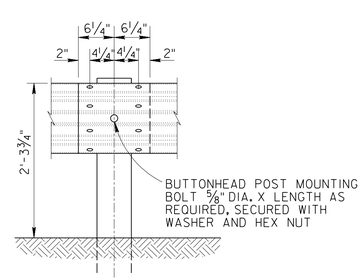

RAIL ELEMENT SPLICING AND POST MOUNTING DETAILS
NO SCALE

NOTES:

1. REMOVE EXISTING GUARDRAIL AS REQUIRED FOR EXCAVATION.
2. REPLACE ALL GUARDRAIL POSTS WITH STEEL POSTS AS SHOWN. EXISTING POSTS WERE INSTALLED @ 12'-6" C-C MAX. FOR 525 LIN. FT.
3. REINSTALL EXISTING SAFETY GUARDRAIL. REPLACE EXISTING WOOD MOUNTING POSTS WITH STEEL "H" BEAM POSTS AND ASSOCIATED HARDWARE.
4. OFFSET GUARDRAIL AT STILLING BASIN HEADWALL BY 6 FEET IN THE UPSTREAM DIRECTION TO ALLOW WALKING ROOM.
5. INSTALL BREAKAWAY CABLE AND OTHER HARDWARE SHOWN TO BRING GUARDRAIL UP TO CURRENT CODE.
6. PROVIDE ALL HARDWARE AND ADDITIONAL GUARDRAIL TO INSTALL GUARDRAIL SYSTEM.

US Army Corps of Engineers
Kansas City District

Symbol	Description	Date	Appr.

Date: APRIL 2004
Design file no. E-1-1669
Drawing code:
Rev.
File name: W1WC018.DGN
Plot date: X
Plot scale: 0.833331

Designed by: H.T.Y.
Dwn by: H.T.Y.
Ckd by: R.S.K.
Reviewed by:
Submitted by: D.L.M.

U.S. ARMY ENGINEER DISTRICT
CORPS OF ENGINEERS
KANSAS CITY, MISSOURI

SALINE RIVER, KANSAS
WILSON LAKE
STILLING BASIN WALL REPAIR

GUARDRAIL DETAILS

Sheet reference number:
C-18